Библиотека СОК

TRANE

RTAA/RTAB
Air-Cooled Helical Rotary Liquid Chillers

Installation
Operation
Maintenance

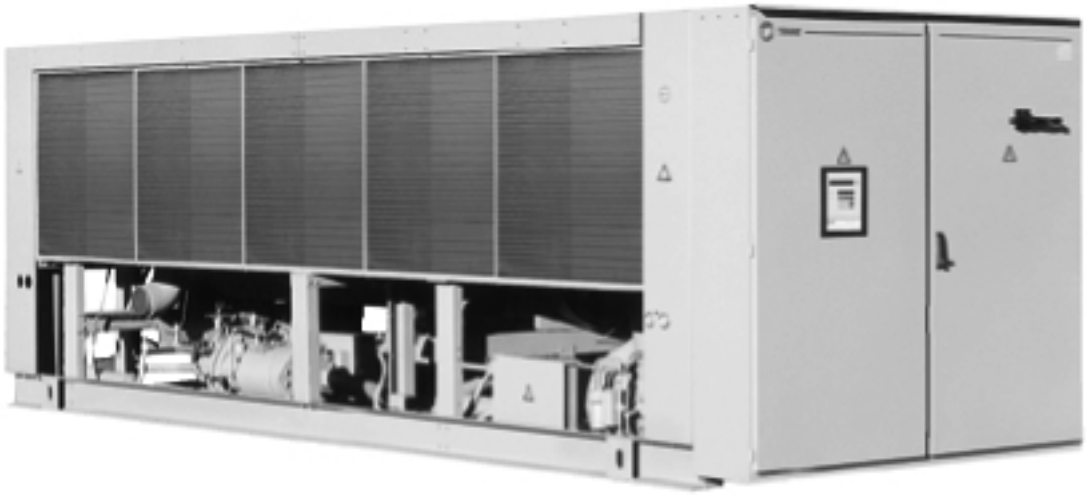

This manual should be used jointly with the manual of the UCM-CLD reference L80 IM 025 E

RTAA 213 - 214 - 215 - 216 - 217 - 322 - 324 - 328 - 430 - 432 - 434
RTAB 108 - 109 - 110 - 207 - 209 - 210 - 211 - 212 - 213 - 214 - 215 - 216 - 217 - 220 - 324 - 328 - 430 - 432 - 434

Quality Management System Approval

C20 IM 004 E

Foreword

These Installation Operation and Maintenance instructions are given as a guide to good practice in the installation, putting into service, operation and periodic maintenance by the user, of the Trane RTAA/RTAB, screw compressor liquid chiller.

They do not give the full service procedures necessary for the continued successful operation of these units. The services of a qualified service technician should be employed, through the medium of a maintenance contract with a reputable service company, to ensure correct long-term maintenance procedures are carried out.

Warranty

Warranty is based on the general terms and conditions of Société Trane. The warranty is void if the equipment is modified or repaired without the written approval of Trane, if the operating limits are exceeded, or if the control system or the electrical wiring is changed. Damage due to misuse, lack of maintenance, or failure to comply with the manufacturer's instructions, is not covered by the warranty obligation. Failure to have the maintenance procedures carried out, may entail cancellation of the warranty and liabilities by Trane.

Caution : Warranty is not Maintenance. Maintenance not carried out in accordance with this manual, may entail the cancellation of warranty and liabilities by Trane.

Reception

All RTAA/RTAB models arrive at jobsite factory assembled, with an operating charge of refrigerant and oil, and with control and starter panels mounted and wired.
On arrival, inspect the unit before signing the delivery note. Specify any damage on the delivery note, and send a registered letter of protest to the last carrier of the goods within 72 hours of delivery. Notify the local Trane sales office at the same time.

The unit should be totally inspected within 7 days of delivery. If any concealed damage is discovered, send a registered letter of protest to the carrier within 7 days of delivery and notify the local Trane sales office.

General information

About this manual
Warnings and Cautions appear at appropriate places in this instruction manual. Your personal safety and the proper operation of this machine require that you follow them carefully. Société Trane assumes no liability for installations or servicing performed by unqualified personnel.

Important : This document must be used jointly with the Installation Operation Maintenance instructions for the Unit Control Module with Clear Language Display (UCM-CLD), referenced L80 IM 025 E.

About this unit
Trane RTAA/RTAB liquid chillers are assembled, pressure tested, dehydrated, charged with refrigerant and oil, and factory tested, before shipment.
The RTAA /RTAB units are factory run tested under actual design conditions.

Refrigerant

The refrigerant provided by Société Trane or Trane UK Ltd meets all the requirements of our units. When using recycled or reprocessed refrigerant, it is advisable to ensure its quality is equivalent to that of a new refrigerant. For this, it is necessary to have a precise analysis made by a specialized laboratory. If this condition is not respected, the Société Trane or Trane UK Ltd warranty could be cancelled.

© American Standard Inc. 1999

Table of contents

Foreword 2
Warranty 2
Reception 2
General 2
Refrigerant 2

Installation

General information 4
Installation 7
Clearances 8
Lifting procedure 11
Water piping 11
Freeze protection 14

Operation

Operating principles 15
Refrigeration cycle 15
Oil system 18
Remote CLD panel wiring 19
Pre-start procedure 21
Start-up procedure 22
Shut-down procedure 23

Maintenance

Maintenance 24
Chemical cleaning configuration 24
Start up log sheet (compressor A, B, C and D) 29
Safety recommendations 32
Maintenance contract 32
Training 32

General information

Unit inspection

When the unit is delivered, verify that it is the correct unit and that it is properly equipped. Compare the information which appears on the unit nameplate with the ordering and submittal information. Refer to «Nameplates».
Inspect all exterior components for visible damage. Report any apparent damage or material shortage to the carrier and make a «unit damage» notation on the carrier's delivery receipt. Specify the extent and type of damage found and notify the appropriate Trane Sales Office.
Do not proceed with installation of a damaged unit without sales office approval.

Inspection checklist

To protect against loss due to damage incurred in transit, complete the following checklist upon receipt of the unit.

- Inspect the individual pieces of the shipment before accepting the unit. Check for obvious damage to the unit or packing material.
- Inspect the unit for concealed damage as soon as possible after delivery and before it is stored. Concealed damage must be reported within 15 days.
- If concealed damage is discovered, stop unpacking the shipment. Do not remove damaged materail from the receiving location. Take photos of the damage, if possible. The owner must provide reasonable evidence that the damage did not occur after delivery.

Notify the carrier's terminal of the damage immediate, joint inspection of the damage with the carrier and the consignee.
Notify the Trane sales representative and arrange for repair. Do not repair the unit, however, until damage is inspected by the carrier's representative.

Loose parts inventory

Check all the accessories and loose parts which are shipped with the unit against shipping list. Included in these items will be vessel drain plugs, rigging and electrical diagrams, and service literature, which are placed inside the control panel and/or starter panel for shipment.

Unit description

The RTAA/RTAB units are one, two, three or four compressor, helical-rotary type, air-cooled liquid chillers designed for installation outdoors. Compressor circuits are completely assembled hermetic packages that are factory-piped, wired, leak-tested dehydrated charged, and tested for proper control operation before shipment.
Figures 1 thru 3 show a typical RTAA/RTAB unit and its components. Table 1 contains general RTAA/RTAB mechanical specifications. Chilled water inlet and outlet openings are covered for shipment. Each circuit is factory charged with the proper amount of refrigerant and oil. Each circuit has a separate compressor motor starter.

Figure 1A - Typical RTAB unit

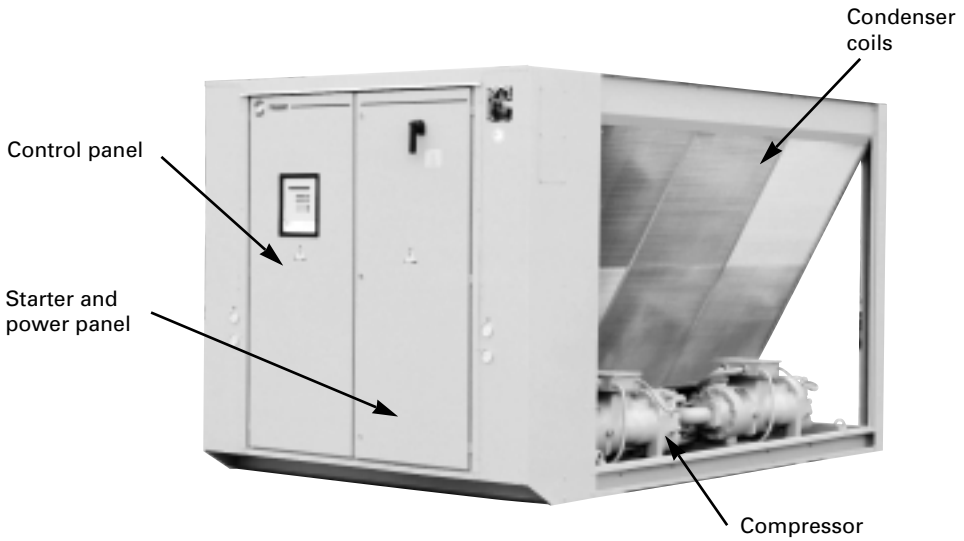

Figure 1B - Typical RTAA unit

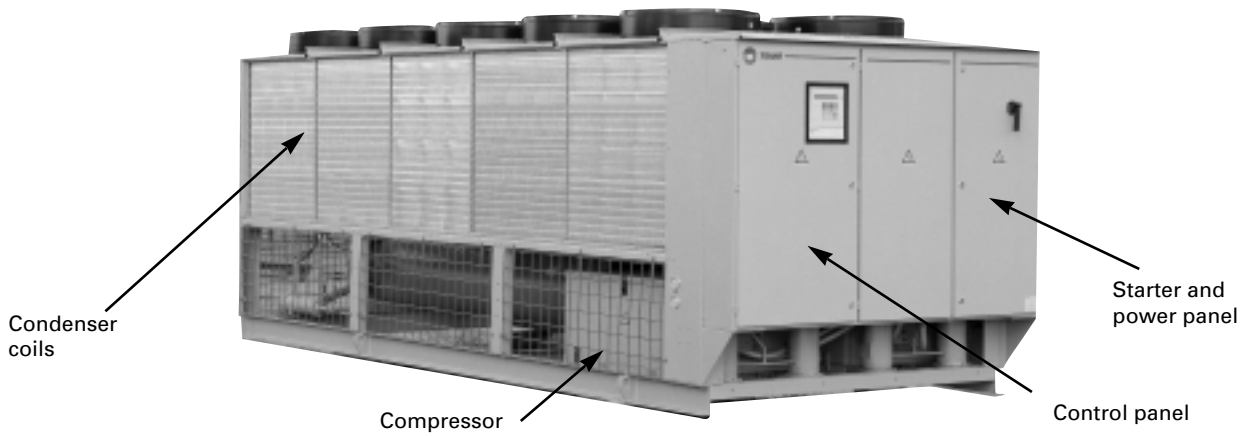

Figure 2 - Starter and control panels

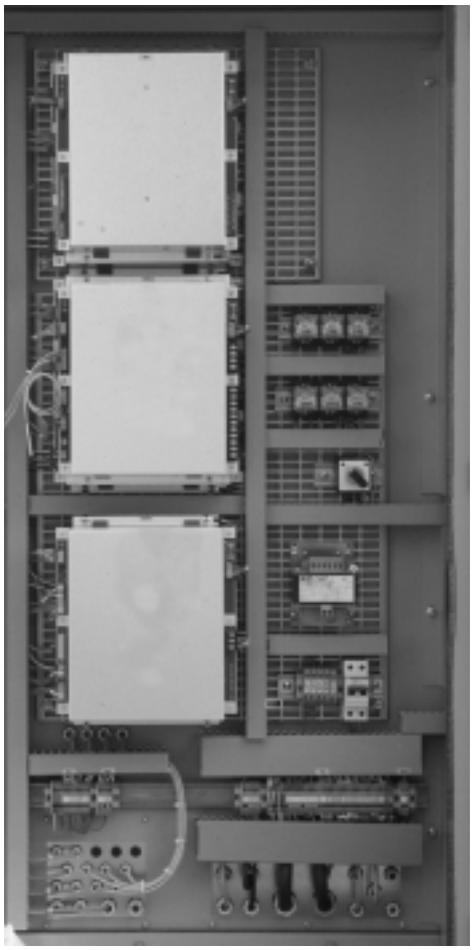

Figure 3 - Starter and control panels

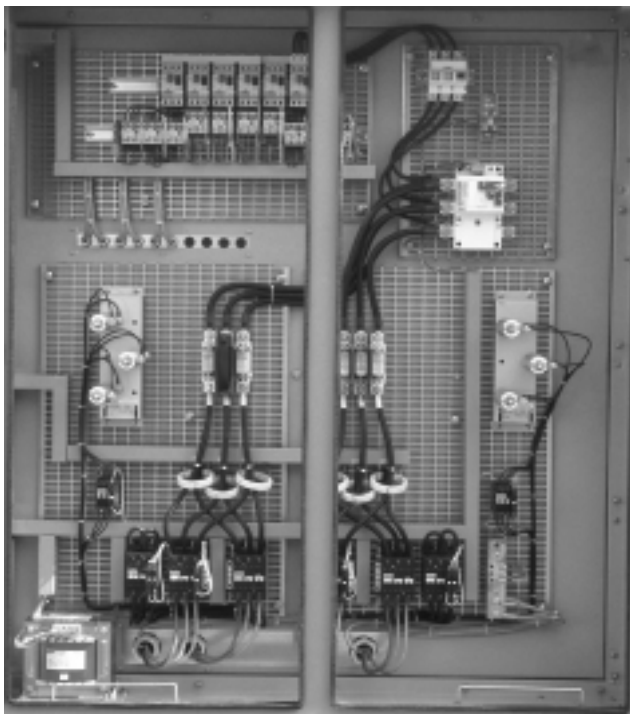

Table 1A : General data on units R22 (standard units)

Model RTAA		213	214	215	216	217	322	324	328	430	432	434
Nominal Cooling Capacity (1)	(kW)	438	481	503	555	601	664	769	865	952	1036	1140
Number of Circuit		2	2	2	2	2	2	2	2	2	2	2
Number of Compressor		1/1	1/1	1/1	1/1	1/1	2/1	2/1	2/1	2/2	2/2	2/2
Maximum FLA 400/50/3 (2)	(A)	308	331	354	384	414	485	561	621	708	768	828
Number of fans		8	8	8	9	10	12	14	16	16	18	20
Fan Motor Size (3)	(kW)	1.21/0.85	1.21/0.85	1.21/0.85	1.21/0.85	1.21/0.85	1.21/0.85	1.21/0.85	1.21/0.85	1.21/0.85	1.21/0.85	1.21/0.85
Fan Speed (3)	(rpm)	730/680	730/680	730/680	730/680	730/680	730/680	730/680	730/680	730/680	730/680	730/680
Oil sump heater	(W)	150/150	150/150	150/150	150/150	150/150	300/150	300/150	300/150	300/300	300/300	300/300
Evaporator Model		ES120	ES140	ES140	ES170	ES170	ES225	ES225	ES250	ES300	ES300	ES340
Evaporator Heater Cable	(W)	400	400	400	400	400	400	400	400	400	400	400
Evaporator Water Connection	(mm)	DN150	DN150	DN150	DN150	DN150	vic 6″	vic 6″	vic 6″	vic 6″	vic 6″	vic 6″
Evaporator Water Volume	(l)	106	270	270	222	222	442	442	415	665	665	610
Oil Charge	(l)	15/15	17/17	17/17	20/17	20/20	30/17	34/20	40/20	34/34	40/34	40/40
R22 Opearting Charge	(kg)	47/47	56/56	56/56	58/58	58/58	94/53	117/53	120/55	116/116	116/116	120/120

Modèle RTAB		108	109	110	207	209	210	211
Nominal Cooling Capacity (1)		211	243	283	190	227	260	290
Number of Circuit		1	1	1	2	2	2	2
Number of Compressor		1	1	1	1/1	1/1	1/1	1/1
Maximum FLA 400/50/3 (2)	(A)	154	177	207	158	180	196	212
Number of fans		4	5	6	4	4	5	6
Fan Motor Size (3)	(kW)	1.88/1.88	1.88/1.88	1.88/1.88	1.88/1.88	1.88/1.88	1.88/1.88	1.88/1.88
Fan Speed (3)	(rpm)	915/915	915/915	915/915	915/915	915/915	915/915	915/915
Oil sump heater	(W)	150	150	150	150/150	150/150	150/150	150/150
Evaporator Model		ES71	ES81	ES81	587-2	ES70	ES80	ES80
Evaporator Heater Cable	(W)	200	200	200	200	200	200	200
Evaporator Water Connection	(mm)	DN125	DN125	DN125	DN125	DN125	DN125	DN125
Evaporator Water Volume	(l)	145	134	118	95	145	134	134
Oil Charge	(l)	16	16	16	8/8	8/8	8/8	8/8
R22 Opearting Charge	(kg)	46 48 50	18/18	23/23 24/24	24/24			

Model RTAB		212	213	214	215	216	217	220
Nominal Cooling Capacity (1)		330	417	452	479	523	567	629
Number of Circuit		2	2	2	2	2	2	2
Number of Compressor		1/1	1/1	1/1	1/1	1/1	1/1	2/2
Maximum FLA 400/50/3 (2)	(A)	256	308	331	354	384	414	512
Number of fans		6	8	9	10	9	10	10
Fan Motor Size (3)	(kW)	1.88/1.88	1.88/1.21	1.88/1.21	1.88/1.21	1.88/1.21	1.88/1.21	1.88/1.21
Fan Speed (3)	(rpm)	915/730	915/730	915/730	915/730	915/730	915/730	915/730
Oil sump heater	(W)	150/150	150/150	150/150	150/150	150/150	150/150	300/300
Evaporator Model		ES100	ES120	ES140	ES140	ES170	ES170	ES200
Evaporator Heater Cable	(W)	200	200	200	200	200	200	200
Evaporator Water Connection	(mm)	DN125	DN125	DN150	DN150	DN150	DN150	DN150
Evaporator Water Volume	(l)	118	106	270	270	222	222	204
Oil Charge	(l)	8/8	15/15	15/17	17/17	17/20	20/20	16/16
R22 Opearting Charge	(kg)	29/29 47/41 44/44	44/44	54/54 54/54	75/75			

Table 1B : General data on units R404 A (standard units)

Model RTAA		213	214	215	216	217	322	324	328	430	432	434
Nominal Cooling Capacity (1)	(kW)	385	422	422	487	528	596	689	804	856	934	1023
Number of Circuit		2	2	2	2	2	2	2	2	2	2	2
Number of Compressor		1/1	1/1	1/1	1/1	1/1	2/1	2/1	2/1	2/2	2/2	2/2
Maximum FLA 400/50/3 (2)	(A)	308	331	354	384	414	485	561	621	708	768	828
Number of fans		8	8	8	9	10	12	14	16	16	18	20
Fan Motor Size (3)	(kW)	1.21/1.21	1.21/1.21	1.21/1.21	1.21/1.21	1.21/1.21	1.21/1.21	1.21/1.21	1.21/1.21	1.21/1.21	1.21/1.21	1.21/1.21
Fan Speed (3)	(rpm)	730/730	730/730	730/730	730/730	730/730	730/730	730/730	730/730	730/730	730/730	730/730
Oil sump heater	(W)	150/150	150/150	150/150	150/150	150/150	300/150	300/150	300/150	300/300	300/300	300/300
Evaporator Model		ES120	ES140	ES140	ES170	ES170	ES225	ES225	ES250	ES300	ES300	ES340
Evaporator Heater Cable	(W)	400	400	400	400	400	400	400	400	400	400	400
Evaporator Water Connection	(mm)	DN150	DN150	DN150	DN150	DN150	vic 6″	vic 6″	vic 6″	vic 6″	vic 6″	vic 6″
Evaporator Water Volume	(l)	106	270	270	222	222	442	442	415	665	665	610
Oil Charge	(l)	15/15	17/17	17/17	20/17	20/20	30/17	34/20	40/20	34/34	40/34	40/40
R404A Opearting Charge	(kg)	47/47	53/53	53/53	55/55	55/55		111/50	114/52	110/110	110/110	132/132

Note :
(1) Operating conditions: chilled water 12/7°C, 35°C ambient, fouling factor = 0.044 m^2 K/kW
(2) To be used for sizing the power supply cables
(3) LN/SQ units (Except RTAB 213 to 434: Standard units/LN units)

Model RTAB		108	109	110	207	209	210	211	212
Nominal Cooling Capacity (1)		207	225	269	188	224	250	276	333
Number of Circuit		1	1	1	2	2	2	2	2
Number of Compressor		1	1	1	1/1	1/1	1/1	1/1	1/1
Maximum FLA 400/50/3 (2)	(A)	154	177	207	158	180	196	212	256
Number of fans		4	5	6	4	4	5	6	6
Fan Motor Size (3)	(kW)	1.88/1.88	1.88/1.88	1.88/1.88	1.88/1.88	1.88/1.88	1.88/1.88	1.88/1.88	1.88/1.88
Fan Speed (3)	(rpm)	915/915	915/915	915/915	915/915	915/915	915/915	915/915	915/915
Oil sump heater	(W)	150	150	150	150/150	150/150	150/150	150/150	150/150
Evaporator Model		ES71	ES81	ES81	587-2	ES70	ES80	ES80	ES100
Evaporator Heater Cable	(W)	200	200	200	200	200	200	200	200
Evaporator Water Connection	(mm)	DN125	DN125	DN125	DN125	DN125	DN125	DN125	DN125
Evaporator Water Volume	(l)	145	134	118	95	145	134	134	118
Oil Charge	(l)	16	16	16	8/8	8/8	8/8	8/8	8/8
R404A Opearting Charge	(kg) 40	48	50	18/18	23/23	24/24	24/24	29/29	

Table 1C : General data on units R134a (standard units)

Model RTAA		213	214	215	216	217	322	324	328	430	432	434
Nominal Cooling Capacity (1)	(kW)	287	320	331	378	406	428	482	537	603	649	717
Number of Circuit		2	2	2	2	2	2	2	2	2	2	2
Number of Compressor		1/1	1/1	1/1	1/1	1/1	2/1	2/1	2/1	2/2	2/2	2/2
Maximum FLA 400/50/3 (2)	(A)	234	245	256	283	309	363	413	466	513	565	618
Number of fans		8	8	8	9	10	12	14	16	16	18	20
Fan Motor Size (3)	(kW)	1.21/0.85	1.21/0.85	1.21/0.85	1.21/0.85	1.21/0.85	1.21/0.85	1.21/0.85	1.21/0.85	1.21/0.85	1.21/0.85	1.21/0.85
Fan Speed (3)	(rpm)	730/680	730/680	730/680	730/680	730/680	730/680	730/680	730/680	730/680	730/680	730/680
Oil sump heater	(W)	150/150	150/150	150/150	150/150	150/150	300/150	300/150	300/150	300/300	300/300	300/300
Evaporator Model		ES120	ES140	ES140	ES170	ES170	ES225	ES225	ES250	ES300	ES300	ES340
Evaporator Heater Cable	(W)	400	400	400	400	400	400	400	400	400	400	400
Evaporator Water Connection	(mm)	DN150	DN150	DN150	DN150	DN150	vic 6″	vic 6″	vic 6″	vic 6″	vic 6″	vic 6″
Evaporator Water Volume	(l)	106	270	270	222	222	442	442	415	665	665	610
Oil Charge	(l)	15/15	17/17	17/17	20/17	20/20	30/17	34/20	40/20	34/34	40/34	40/40
R134a Opearting Charge	(kg)52/52	62/62	62/62	64/64	64/64	104/59	129/59	132/61	128/128	128/128	132/132	

Model RTAB		108	109	110	207	209	210	211	212	213	214
Nominal Cooling Capacity (1)		137	153	180	118	146	165	180	215	261	285
Number of Circuit		1	1	1	2	2	2	2	2	2	2
Number of Compressor		1	1	1	1/1	1/1	1/1	1/1	1/1	1/1	1/1
Maximum FLA 400/50/3 (2)	(A)	119	133	159	121	137	150	164	196	239	250
Number of fans		4	5	6	4	4	5	6	6	6	6
Fan Motor Size (3)	(kW)	1.88/1.88	1.88/1.88	1.88/1.88	1.88/1.88	1.88/1.88	1.88/1.88	1.88/1.88	1.88/1.88	1.88/1.21	1.88/1.21
Fan Speed (3)	(rpm)	915/915	915/915	915/915	915/915	915/915	915/915	915/915	915/915	915/730	915/730
Oil sump heater	(W)	150	150	150	150/150	150/150	150/150	150/150	150/150	150/150	150/150
Evaporator Model		ES71	ES81	ES81	587-2	ES70	ES80	ES80	ES100	ES120	ES140
Evaporator Heater Cable	(W)	200	200	200	200	200	200	200	200	200	200
Evaporator Water Connection	(mm)	DN125	DN125	DN125	DN125	DN125	DN125	DN125	DN125	DN125	DN150
Evaporator Water Volume	(l)	145	134	118	95	145	134	134	118	106	270
Oil Charge	(l)	16	16	16	8/8	8/8	8/8	8/8	8/8	15/15	15/15
R134a Opearting Charge	(kg) 42	44	46	20/20	21/21	22/22	22/22	28/28	40/40	43/43	

Model RTAB		215	216	217	220	324	328	430	432	434
Nominal Cooling Capacity (1)		301	337	364	418	478	543	601	648	715
Number of Circuit		2	2	2	2	2	2	2	2	2
Number of Compressor		1/1	1/1	1/1	2/2	2/1	2/1	2/2	2/2	2/2
Maximum FLA 400/50/3 (2)	(A)	261	289	317	379	412	464	515	567	619
Number of fans		6	7	8	8	8	9	10	11	12
Fan Motor Size (3)	(kW)	1.88/1.21	1.88/1.21	1.88/1.21	1.88/1.21	1.88/1.21	1.88/1.21	1.88/1.21	1.88/1.21	1.88/1.21
Fan Speed (3)	(rpm)	915/730	915/730	915/730	915/730	915/730	915/730	915/730	915/730	915/730
Oil sump heater	(W)	150/150	150/150	150/150	300/300	300/150	300/150	300/300	300/300	300/300
Evaporator Model		ES140	ES170	ES170	ES200	ES225	ES250	ES300	ES300	ES340
Evaporator Heater Cable	(W)	200	200	200	200	200	200	200	200	200
Evaporator Water Connection	(mm)	DN150	DN150	DN150	DN150	vic 6″	vic 6″	vic 6″	vic 6″	vic 6″
Evaporator Water Volume	(l)	270	222	222	204	442	415	665	665	610
Oil Charge	(l)	17/17	17/20	20/20	16/16	34/20	40/20	34/34	40/34	40/40
R134a Opearting Charge	(kg)50/50	53/53	53/53	80/80	72/44	74/45	77/72	77/72	80/75	

Note :
(1) Operating conditions: chilled water 12/7°C, 35°C ambient, fouling factor = 0.044 m^2 K/kW
(2) To be used for sizing the power supply cables
(3) LN/SQ units (Except RTAB 213 to 434: Standard units/LN units)

The RTAA/RTAB series features Trane's exclusive Adaptive Control logic, which monitors the control variables that govern the operation of the chiller unit. Adaptive Control logic can correct these variables, when necessary, to optimize operational effiencies, avoid chiller shutdown, and keep producing chilled water. An optional remote display is available to monitor unit operation from a remote location.
These dual-compressor units feature two independent circuits, one for each compressor. Compressor unloaders are solenoid actuated and oil pressure operated. Each refrigerant circuit its provided with an operating charge of refrigerant and refrigerant oil, filter drier, sight glass, electronic expansion valve, and charging valves.
The evaporator is fully insulated, has heat tape protection (-18°C), and is equipped with water drain and vent connections.

Warnings and cautions

Warnings and **Cautions** appear in boldface type at appropriate points in this manual.

Warnings are provided to alert personnel to potential hazards that can result in personal injury or death; they do not replace the manufacturer's recommendations.

Cautions alert personnel to conditions that could result in equipment damage.

Your personal safety and reliable operation of this machine depend upon strict observance of these precautions. The Trane Company assumes no liability for installation or service procedures performed by unqualified personnel.

Installation

Installation responsibilities

a Generally, the contractor must do the following when installing an RTAA/RTAB units :

1. Install unit on a flat foundation, level (within 1/4" [6mm]), and strong enough to support unit loading.
2. Install unit per the instructions contained in the installation-mechanical and installation-electrical sections of this manual.
3. Install any optional sensors and make electrical connections at the UCM-CLD.

Note : The standard leaving chilled water sensor is factory installed in the evaporator leaving water outlet.

4. Where specified, provide and install valves in water piping upstream and downstream of evaporator water connections to isolate the evaporator for maintenance, and to balance/trim system.
5. If desired, supply and install flow switches in the chilled water piping; interlock each switch proper pump starter to ensure unit can only operate if water flow is established. Chilled water protection is provided by the UCM-CLD without the need for a chilled water flow switch. A flow switch for chilled water is strictly discretionary.
6. Furnish and install pressure gauges in inlet and outlet pipings of the evaporator.
7. Furnish and install a drain valve to the bottom of the evaporator.
8. Install a strainer in the entering water line, to prevent water-born debris from entering the system.
9. Where specified, furnish and install strainers ahead of all pumps and automatic modulating valves.
10. Provide and install field wiring.
11. Start unit under supervision of a qualified service technician.
12. Install heat tape and insulate the chilled water lines and any other portions of the system, as required, to prevent sweating under normal operating conditions or freezing during low ambient temperature conditions.

Important : All relief valve venting is the responsibility of the installing contactor.

Nameplates

The RTAA/RTAB «unit» nameplates are applied to the exterior and interior surface of the Control Panel door (figure 4). A «compressor» nameplate is located on each compressor.

Unit Nameplate

The «unit» nameplate provides the following information :

- Unit model and size description
- Unit serial number
- Identifies unit electrical requirements
- Lists correct operating charges of R22/R134a/R404A and refrigerant oil.
- Lists unit test pressures

Figure 4 - Nameplate

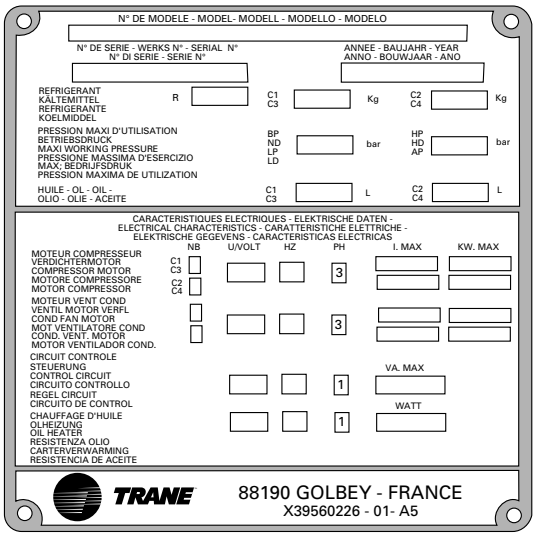

Compressor Nameplate
The «compressor» nameplate provides the following information :
- Compressor model number
- Compressor electrical characteristics
- Utilization Range
- Recommended refrigerant

Storage
Extended storage of the chiller prior to installation requires the following precautionary measures :
1. Store the chiller in a secure area
2. At least every three months (quarterly), check the pressure in the refrigerant circuits to verify that the refrigerant charge is intact. If it is not, contact a qualified service organization and the appropriate Trane sales office.

Pre-installation
Report any damage incurred during handling or installation to the Trane sales office immediately. An installation check sheet is provided at the end of the manual.

Location requirements
Noise considerations
Locate the unit away from sound-sensitive areas. If required, install rubber vibration isolators in all water piping and use flexible electrical conduit. Refer to «Unit isolation». Consult an acoustical engineer for critical applications.

Installation mechanical

Foundation
Provide rigid, non-warping mounting pads or a concrete foundation of sufficient strength and mass to support the chiller operating weight (i.e., including completed piping, and full operating charges of refrigerant, oil and water). Refer to the submittals for unit operating weights. Once in place, the chiller must be level within 1/4" (6mm) over its length and width. The Trane Company is not responsible for equipment problems resulting from an improperly designed or constructed foundation.

Clearances
Provide enough space around the unit to allow the installation and maintenance personnel unrestricted access to all service points. Refer to submittal drawings for the unit dimensions. A minimum of four feet is recommended for compressor service and to provide sufficient clearance for the opening of control panel doors. Refer to the submittals delivered with the units for minimum clearances. In all cases, local codes which require additional clearances will take precedence over these recommendations.

Figure 5 - Multiple-chiller layouts

Figure 5 shows two possible configurations for a multiple-chiller layouts. Positioning the chillers as shown in arrangement A provides good air movement, Arrangement B should be avoided (inhibits air flow between the chillers).

Arrangement A :

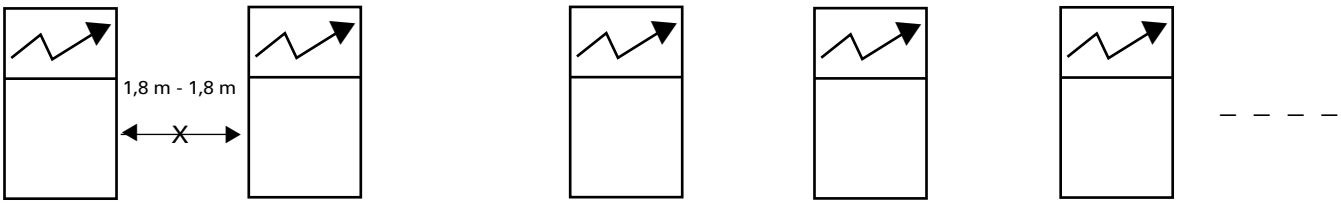

(clearance between units : refer to submittal drawings)

Arrangement B :

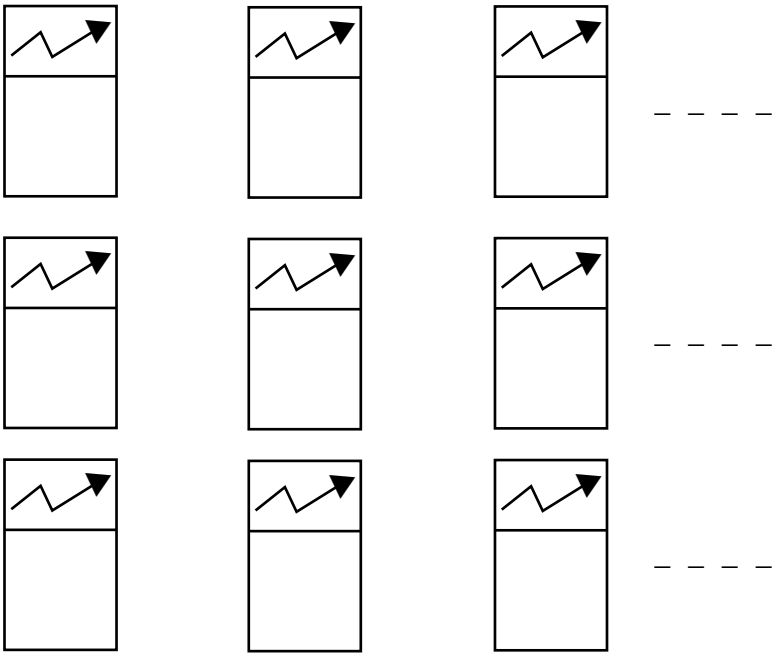

Note : If the chiller configuration requires a variance to the clearance dimensions, contact your Trane Sales Office Representative.

Ventilation
The RTAA/RTAB is designed for outdoor installation and therefore no special measures need be taken for ventilation except as noted in the clearances on submittals.

Drainage
Locate the unit near a large capacity drain for water vessel drain-down during shutdown or repair. The evaporator is provided with a drain connection. Refer to «Evaporator-Drain». All local and national codes apply. The vent on the top of the evaporator is provided to prevent a vacuum by allowing air into the evaporator for complete drainage.

Rigging
The model RTAA/RTAB chiller should be moved by lifting. Refer to Figure 6 for typical unit lifting. **Refer to the rigging diagram that ships with each unit for specific «per unit» weight data.**

Warning : To prevent injury or death and unit damage, capacity of lifting equipment must exceed unit lifting weight by an adequate safety factor.

Figure 6A - RTAA rigging and lifting

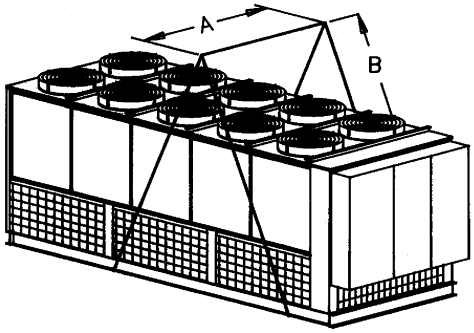

RTAA	213	214	215	216	217	322	324	328	432/434
A (mm)	2107	2107	2107	2107	2107	2300	2300	2300	2300
B (mm)	3317	3317	3317	3317	3317	3300	3500	3500	3500
Maxi weight (kg)	4400	5300	5400	5500	5900	8000	8000	8000	10600

Figure 6B - RTAB rigging and lifting

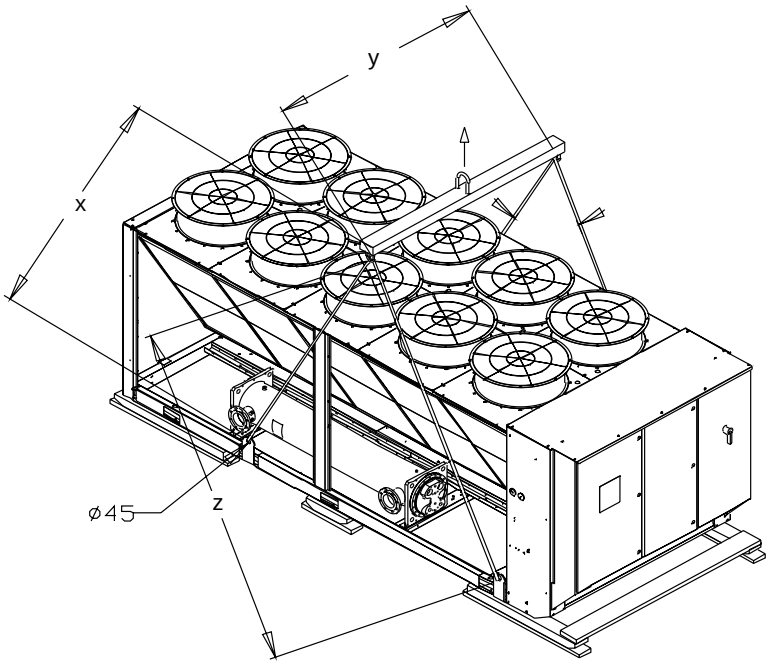

RTAB	108	109	110	207	209	210	211	212
X (mm)	2300	2300	2300	2300	2300	2300	2300	2300
Y (mm)	2470	2470	2470	2510	2510	2510	2510	2510
Z (mm)	2670	2670	2670	2630	2630	2630	2630	2630
Maxi. weight (kg)	2580	2680	2700	2660	2770	2840	2890	2890

RTAB	213	214	215	216	217	220	324	328	430	432	434
X (mm)	2300	2300	2300	2300	2300	2200	2300	2300	2300	2300	2300
Y (mm)	3000	3000	3000	3000	3000	3450	3900	3900	3900	3900	3900
Z (mm)	3000	3000	3000	3000	3000	3450	3900	3900	3900	3900	3900
Maxi. weight (kg)	4170	4700	4720	5190	5240	5900	6550	6630	7820	7870	7950

Lifting procedure

Caution : To prevent damage do not use a forklift to lift the unit.

- Install clevis connectors through the four lifting plates provided on the unit (figure 6).

Warning : To prevent injury or death and unit damage, use the lifting method shown in figure 6.

- Attach lifting chains or cables to clevis connectors. Each cable alone must be strong enough to lift the chiller.
- Attach cables to lifting beam. Total lifting weight, lifting weight distribution and required lifting beam dimensions are shown by the rigging diagram shipped with each unit. Lifting beam crossbars must be positioned so lifting cables do not contact the sides of the unit.

Caution : To prevent unit damage, position lifting beam so that cables do not contact the unit.

Unit isolation and leveling

If the unit application requires maximum sound and vibration reduction, use one of the two mounting methods outlined below :

1. Construct an isolated concrete pad for the unit or provide concrete footings at each of the eight unit mounting points. Mount the unit directly to the concrete pads or footings.
   Level the unit the base rais as a reference. The unit must be level within 1/4" (6 mm) over the entire length. Use shims as necessary to level the unit.
2. Install the optional spring isolators at each of the eight unit mounting points. Refer to submittals isolator placement locations and loading information.
   a. Secure the isolators to the mounting surface, using the mounting slots in the isolator base plate. Do not fully tighten the isolator mounting bolts at this time.
   b. Positioning pins are located on the top of each isolator, as shown in submittals. Lower the unit onto the isolators so that the pins register with the unit mounting holes.
   c. The weight of the unit will force the upper housing of each isolator down. This may cause the upper housing to contact the lower housing. Clearances between upper and lower housings must be 1/4 to 1/2 inch (6-12 mm). If the clearance on any isolators is greater than 1/2 inch (6 mm), it will be necessary to use shims or grout to achieve the required clearance.
   d. Minor adjustments can be made to the clearance by turning the leveling bolt ; clockwise to increase the clearance and counterclockwise to decrease the clearance. All eight isolators must be supporting the entire weight of the unit while these adjustments are being made.

Note : If proper clearances cannot be achieved using the leveling bolts, use shims or grounting under the isolators, as required. Isolators must not straddle small gaps in the shims or grout.

   e. Before tightening the mounting bolts, level the unit using the unit base rail as a reference. The unit must be level within 1/4" (6 mm)over the entire length. Use the leveling bolts and/or additional shims or grout to level the unit.

Water piping

Thoroughly flush all water piping to the unit before making the final piping connections to the unit.

Caution : If using an acidic commercial flushing solution, construct a temporary bypass around the unit to prevent damage to internal components of the evaporator.

Caution : To avoid possible equipment damage, do not use untreated or improperly treated system water.

When completing the NPT-type water connections, apply a suitable pipe sealant, or Teflon tape, to prevent water leakage. To minimize heat gain and to prevent condensation, insulate all piping.

Caution : Avoid overtightening and possible damage of water connections. The lubricating properties of Teflon tape make the possibility of overtightening more likely.

Evaporator piping

Figure 7 illustrates typical evaporator piping components. Components and layout will vary slightly, depending on the location of connections and the water source.

Caution : if the chilled water connections to the evaporator are to be «Victaulic» type connections. Do not attempt to weld these connections, as the heat generated from welding can cause internal damage to the evaporator.

A vent is provided on the top of the evaporator at the return end. Be sure to provide additional vents at high points in the piping to bleed air from the chilled water system. Install necessary pressure gauges to monitor the entering and leaving chilled water pressures.

Provide shutoff valves in lines to the gauges to isolate them from the system when they are not in use. Use rubber vibration eliminators to prevent vibration transmission through the water lines.
If desired, install thermometers in the lines to monitor entering and leaving water temperatures. Install a balancing valve in the leaving water line to control water flow balance. Install shutoff valves on both the entering and leaving water lines so that the evaporator can be isolated for service.

Figure 7 - Suggested piping for typical RTAA/RTAB evaporator

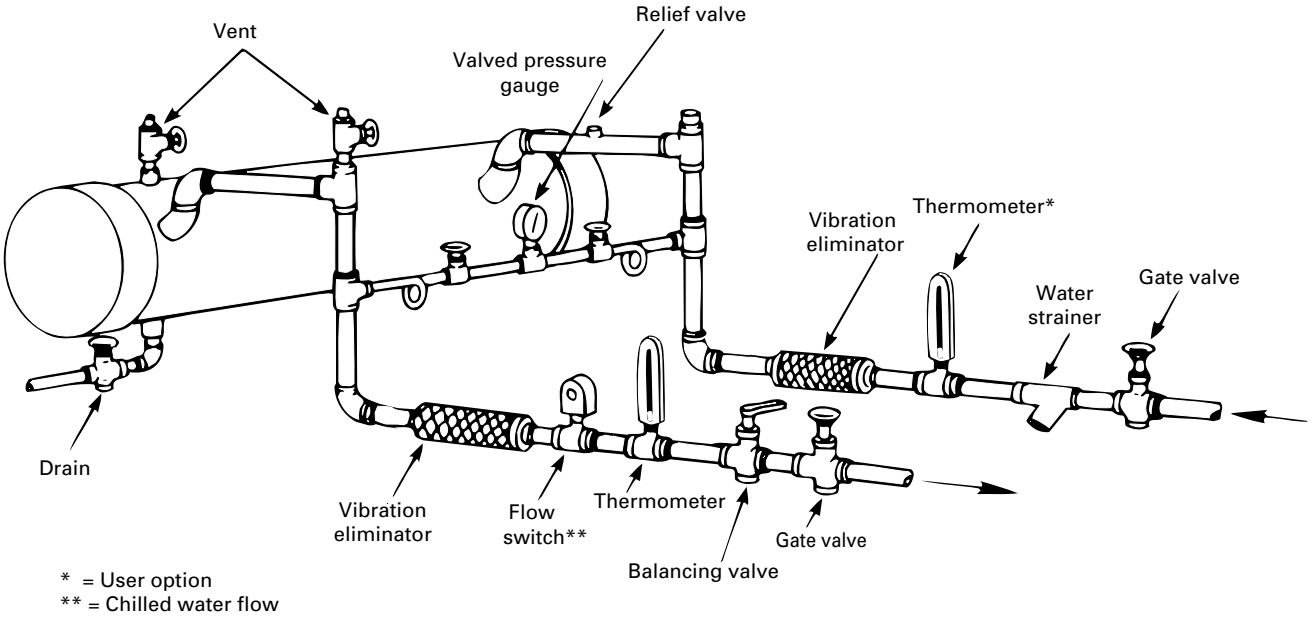

A pipe strainer should be installed in the entering water line to prevent water-borne debris from entering the system.

Evaporator piping components
«Piping components» include all devices and controls used to provide proper water system operation and unit operating safety. These components and their general locations are given below.

Entering chilled water piping
- Air vents (to bleed air from system).
- Water pressure gauges with shutoff valves
- Vibration eliminators
- Shutoff (isolation) valves
- Thermometers (if desired)
- Cleanout tees
- Pipe strainer

Caution : To prevent tube damage install strainer in evaporator water inlet piping.

Leaving chilled water piping
- Air vents (to bleed air from system).
- Water pressure gauges with shutoff valves.
- Vibration eliminators.
- Shutoff (isolation) valves.
- Thermometers.
- Cleanout tees.
- Balancing valve.
- Flow switch (if desired).

Caution : To prevent evaporator damage, do not exceed 14 bar evaporator water pressure.

Evaporator drain

A 3/4" drain connection is located under the outlet end of the evaporator. This may be connected to a suitable drain to permit evaporator drainage during unit servicing. A shutoff valve must be installed on the drain line.
If a drain line is not provided, install the drain plug that is shipped with the unit.

Evaporator flow switch
Chilled water flow protection is provided by the UCM-CLD without the need for a chilled water flow switch. A flow switch for chilled water is strictly discretionary but if not installed, a signal must be sent to the chiller to indicate that water flow has been established, eg. chilled water pump motor starter auxiliaries.
If additional chilled water flow protections is desired, use a field-installed flow switch or differential pressure switch with the pump interlock to sense system water flow. Install and wire the flow switch in series with the chilled water pump motor starter auxiliaries.

Specific connection and schematic wiring diagrams are shipped with the unit. Some piping and control schemes, particularly those using a single water pump for both chilled and hot water, must be analyzed to determine how and/or if a flow sensing device will provide desired operation.
Follow the manufacturer's recommendations for selection and installation procedures. General guidelines for flow switch installation are outlined below :

1. Mount the switch upright, with a minimum of 5 pipe diameters of straight horizontal run on each side. Do not install close to elbows, orifices or valves.

Note : The arrow on the switch must point in the direction of flow.

2. To prevent switch fluttering, remove all air from the water system.

Note : The UCM-CLD provides a 6 second time delay after a «loss-of-flow» diagnostic before shutting the unit down. Contact a qualified service representative if nuisance machine shutdowns persist.

3. Adjust the switch to open when water flow falls below nominal. Refer to Figure 8 for minimum flow recommendations. Flow switch contacts are closed on proof of water flow.

Figure 8 - Evaporator pressure drop

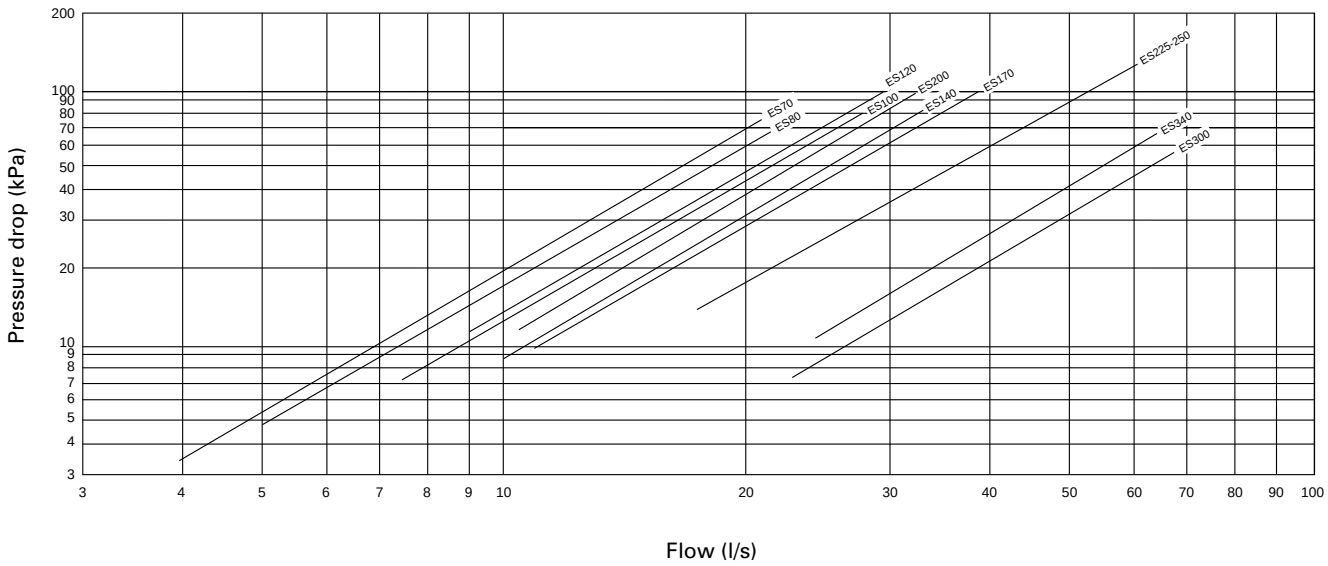

Figure 9 - Maxi and mini water flow

Evaporator size		ES 70	ES 80	ES 100	ES 120	ES 140	ES 170	ES 200	ES 225-250	ES 300	ES 340
Mini water flow	(l/s)	3,9	5	7,5	9	8,5	11	11	17	23	24
Pressure drop	(kPa)	3,5	4,8	7,5	11	10	9,9	12,5	13	7,5	11
Maxi water flow	(l/s)	21	22	27	29	33	39	33,5	61	64	66
Pressure drop	(kPa)	75	69	80	99	82	98	100	136	55	68

Water treatment

Using untreated or improperly treated water in these units may result in inefficient operation and possible tube damage. Consult a qualified water treatment specialist to determine whether a treatment is needed. The following disclamatory label is provided on each RTAA/RTAB unit.

Customer note

The use of improperly treated or untreated water in this equipment may result in scaling, erosion, corrosion, algae or slime. The services of a qualified water treatment specialist should be engaged to determine what treatment, if any, is advisable. Société Trane warranty specifically excludes liability for corrosion, erosion or deterioration of Trane equipment. Trane assumes no responsabilities for the results of the use of untreated or improperly treated water, or saline or brackish water.

Caution : Do not use untreated or improperly treated water equipment damage may occur.

Water pressure gauges

Install field-supplied pressure gauges as shown in figure 7. Locate pressure gauges or taps in a straight run of pipe ; avoid placement near elbows, etc. Be sure to install the gauges at the same elevation.

To read manifolded pressure gauges, open one valve and close the other (depending upon the reading desired). This eliminates errors resulting from differently calibrated gauges installed at unmatched elevations.

Water pressure relief valves

Install a water pressure relief valve in the evaporator inlet shutoff valve, as shown in figure 7. Refer to applicable codes for relief valve installation guidelines.

Caution : To prevent shell damage, install pressure relief valves in the evaporator water system.

Freeze protection

If the unit will remain operational at subfreezing ambient temperatures, the chilled water system must be protected from freezing, following the steps listed below :

1. Heat tape is factory-installed on the unit evaporator and will protect it from freezing in ambient temperatures down to -18°C.
2. Install heat tape on all water piping pumps, and other components that may be damaged if exposed to freezing temperatures. Heat tape must be designed for low ambient temperature applications. Heat tape selection should be based on the lowest expected ambient temperature, including wind chill factors.

If heat tape is not used, add a nonfreezing, low temperature, corrosion inhibiting, heat transfer fluid to the chilled water system. The solution must be strong enough to provide protection against ice formation at the lowest anticipated ambient temperature. Refer to table 1 for evaporator water storage capacities.

Note : Use of glycol type antifreeze reduces the cooling capacity of the unit and must be considered in the design of the system specifications.

Installation check list

Complete this checklist as the unit is installed, to verify that all recommended procedures are accomplished before the unit is started. This checklist does not replace the detailed instructions given in the «Installation - Mechanical» section of this manual. Read this section completely, to become familiar with the installation procedures, prior to beginning the work.

Receiving

- Verify that the unit nameplate data corresponds to the ordering information.
- Inspect the unit for shipping damage and any shortages of materials. Report any damage or shortage to the carrier.

Unit location and mounting

- Inspect the location desired for installation and verify adequate service access clearances.
- Provide drainage for evaporator water.
- Remove and discard all shipping materials (cartons, etc.)
- Install optional spring isolators, if required.
- Level the unit and secure it to the mounting surface.

Unit piping

- Flush all unit water piping before making final connections to the unit.

Caution : If using an acidic commercial flushing solution, construct a temporary bypass around the unit to prevent damage to internal components of the evaporator.

Caution : To avoid possible equipment damage, do not use untreated or improperly treated system water.

- Connect the chilled water piping to the evaporator.
- Install pressure gauges and shutoff valves on the chilled water inlet and outlet to the evaporator.
- Install a water strainer in the entering chilled water line.
- Install a balancing valve and flow switch (discretionary) in the leaving chilled water line.
- Install a drain with shutoff valve or a drain plug on the evaporator.
- Vent the chilled water system at high points in the system piping.
- Apply heat tape and insulation, as necessary, to protect all exposed piping from freeze-up.

Operation

Operating principles-mechanical

General

This section describes the mechanical operating principles of Screw compressor air-cooled chillers equipped with microcomputer-based control systems.

- Unit Control Module (UCM-CLD)
- Unit-mounted panel
- Helical-rotary compressor
- Direct Expansion evaporator
- Air-cooled condenser
- Oil supply system (hydraulic and lubrication)
- Interconnecting piping

Components of a typical RTAA/RTAB unit are identified in Figures 1 through 3.

Refrigeration (cooling) cycle

Overview

The refrigeration cycle of the Screw compressor R air-cooled chiller is conceptually identical to that of the Trane reciprocating air-cooled units. The major difference is that the Screw compressor unit uses helical rotary compressors, an electronic expansion valve on each circuit, an external oil cooling and filtration system, and Trane's exclusive Adaptive Control system.

The basic characteristics of the Screw compressor refrigeration cycle provide these units with distinct operational and reliability advantages over other types of units in their size range.

Figure 10A - Refrigeration system for CHHN compressors

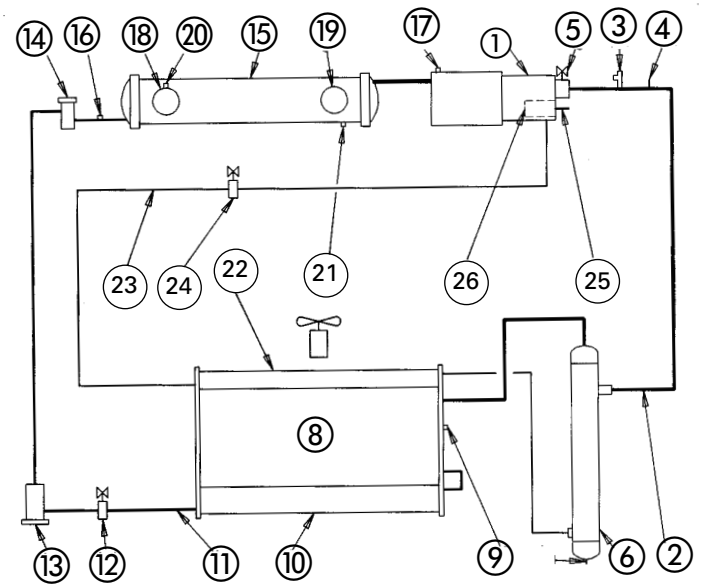

1. Compressor
2. Discharge line
3. Safety valve
4. HP pressure switch
5. Discharge stop valve
6. Oil separator
7. Oil separator vent
8. Condensing coil
9. Condenser saturated temperature sensor
10. Sub-cooler
11. Liquid line
12. Liquid stop valve
13. Drier filter
14. Electronic expansion valve
15. Evaporator
16. EVP refrigerant entering temperature sensor
17. EVP refrigerant leaving temperature sensor
18. Water inlet connection
19. Water outlet connection
20. Water inlet temperature sensor
21. Water outlet temperature sensor
22. Oil cooler
23. Oil line
24. Oil stop valve
25. Oil temperature sensor
26. Oil filter

Figure 10B - Refrigeration system for CHHB compressors

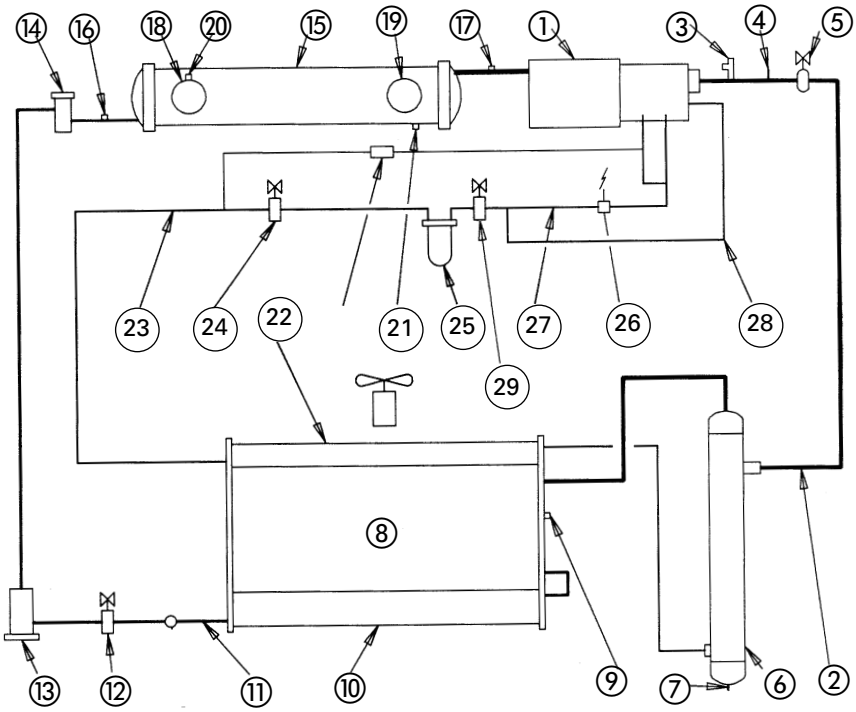

1. Compressor
2. Discharge line
3. Safety valve
4. HP pressure switch
5. Discharge stop valve
6. Oil separator
7. Oil separator vent
8. Condensing coil
9. Condenser saturated temperature sensor
10. Sub-cooler
11. Liquid line
12. Liquid stop valve
13. Drier filter
14. Electronic expansion valve
15. Evaporator
16. EVP refrigerant entering temperature sensor
17. EVP refrigerant leaving temperature sensor
18. Water inlet connection
19. Water outlet connection
20. Water inlet temperature sensor
21. Water outlet temperature sensor
22. Oil cooler
23. Oil line
24. Oil stop valve
25. Oil filter
26. Oil solenoid valve
27. Compressor load/unload line
28. Oil injection line
29. Oil differential pressure switch

Cycle description

Vaporized refrigerant leaves the evaporator and is drawn into the compressor. Here it is compressed and leaves the compressor as a mixture of hot gas and oil (which was injected during the compression cycle).
The mixture enters the oil separator at the two in/out caps. The separed oil flows to the bottom of the separator, while the refrigerant gas flows out the top and passes on the tubes in the condensing coils. Here circulating air removes heat from the refrigerant and condenses it.
The condensed refrigerant passes through the electronic expansion valve and into the tubes of the evaporator. As the refrigerant vaporizes, it cools the system water that surrounds the tubes in the evaporator.

Compressor description

The compressors used by the model RTAA/RTAB air-cooled chiller consists of two distinct components : the motor and the rotors. Refer to figure 11.

Compressor motor

A two-pole, hermetic, squirrel-cage induction motor directly drives the compressor rotors. The motor is cooled by suction refrigerant gas from the evaporator, entering the end of the motor housing through the suction line.

Compressor rotors

The compressor is a semi-hermetic direct-drive helical rotary type compressor. Each compressor has only 3 moving parts : 2 rotors - «male» and «female» - provide compression, and a slide valve controls capacity. See figure 11. The male rotor is attached to, and driven by, the motor, and the female rotor is, in turn, driven by the male rotor. Separately housed bearing sets are provided at each end of both rotors. The slide valve is located above, and moves along, the top of the rotors.
The helical rotary compressor is a positive displacement device. The refrigerant from the evaporator is drawn into the suction opening at the end of the motor barrel, through a suction strainer screen, across the motor, and into the intake of the compressor rotor section. The gas is then compressed and discharged directly into the discharge line.

There is no physical contact between the rotors and compressor housing. The rotor contact each other at the point where the driving action between the male and female rotors occurs. Oil is injected along the top of the compressor rotor section, coating both rotors and the compressor housing interior. Although this oil does provide rotor lubrication, its primary purpose is to seal the clearance spaces between the rotors and compressor housing.
A positive seal between these internal parts enhances compressor efficiency by limiting leakage between the high pressure and low pressure cavities.
Capacity control is accomplished by means of a slide valve assembly located in the rotor section of the compressor. Positioned along the top of the rotors, the slide valve is driven by a piston/cylinder along an axis that parallels those of the rotors.
Compressor load condition is dictated by the position of the slide valve over the rotors. When the slide valve is fully extended over the rotors and away from the discharge end, the compressor is fully loaded. Unloading occurs as the slide valve is drawn towards the discharge end. Slide valve unloading lowers refrigeration capacity by reducing the compression surface of the rotors.

Compressor loading sequence

When there is a call for chilled water, the UCM-CLD will start the compressor which has the least number of starts. If the first compressor cannot satisfy the demand, the UCM-CLD will start the other compressor and then balance the load on both compressors by pulsing the load/unload solenoids.
The load on the compressors will be kept in balance, as load fluctuates, until the demand for chilled water is reduced to a level that can be handled by one compressor. As this time, the UCM-CLD will drop off the compressor that has the greatest number of operating hours and will adjust the load on the other compressor, as required.

Figure 11A - Typical CHHN compressor

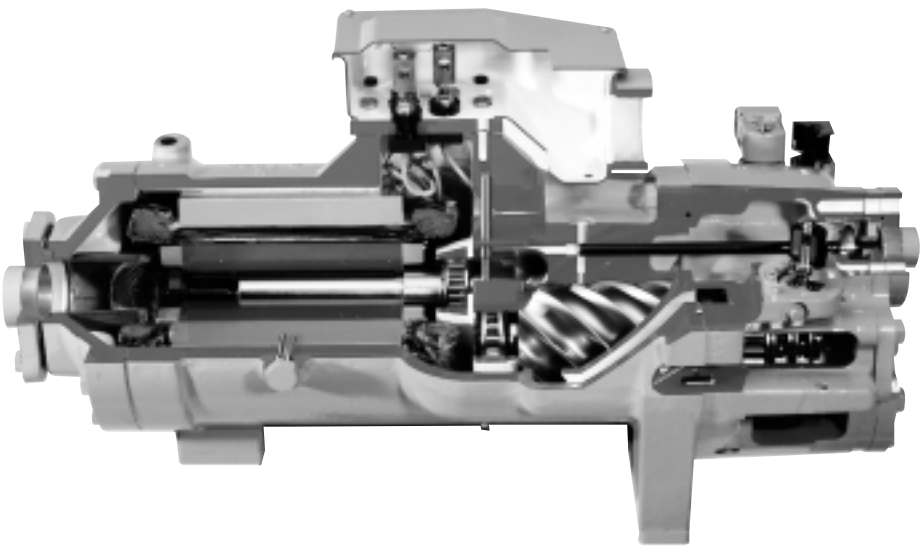

Figure 11B - Typical CHHB compressor

Oil system operation

Overview

Oil that collects in the bottom of the oil separator is at condensing pressure during compressor operation ; therefose, oil is constantly moving to lowwer pressure areas.

As the oil leaves the separator, it passes through the oil cooler at the top of the condensing coils. It then goes through the service valve and filter. At this point, some of the oil is used to control the slide valve movement in the compressor, via the load/unload solenoids. The remaining oil passes through the oil master solenoid valve and performs the functions of compressor bearing lubrication and compressor oil injection. If the compressor stops for any reason, the master solenoid valve closes, isolating the oil charge in the separator and oil cooler during «off» periods.

To ensure proper lubrication and minimize refrigerant condensation in the compressor, a heater is mounted on the bottom of the compressor housing. A signal from the UCM energizes this heater during the compressor «Off» cycle to keep refrigerant from condensing in the compressor. The heater element is continiuously energized.

Oil separator

The mixture oil + refrigerant enters tangentially the oil separator and swirls around. Thus, the oil (which is denser) is thrown to the outside wall and flows to the bottom of the separator. It then goes to the cooling circuit. The gas exits out the middle part of the separator and is discharged into the condensing coils. (Figure 12).

Compressor bearing oil supply

Oil is injected into the bearing housings located at each end of both the male and fermale rotors. Each bearing housing is vented to compressor suction, so that oil leaving the bearings returns through the compressor rotors to the oil separator.

Compressor rotor oil supply

Oil flows through this circuit directly from the master solenoid valve, through the oil filter to the top of the compressor rotor housing. There, it is injected along the top of the rotors to seal clearance spaces between the rotors and the compressor housing and to lubricate the rotors.

Figure 12 - Oil separator

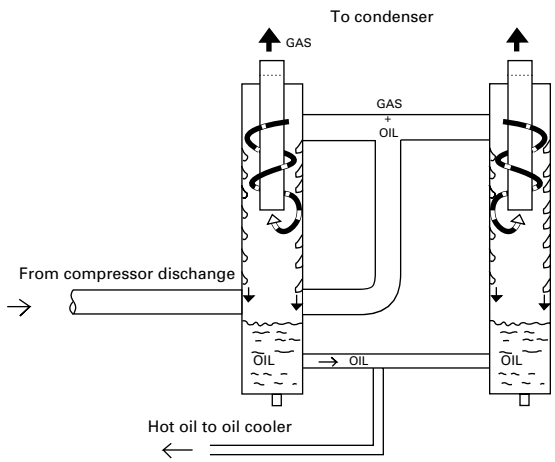

Slide valve movement
Movement of the slide valve piston determines slide valve position which, in turn, regulates compressor capacity. Oil flow into and out of the cylinder governs piston movement and is controlled by the normally-closed, load and unload solenoid valves.
The solenoid valves receive momentary pulsating «load» and «unload» voltage signals from the UCM-CLD based on system cooling requirements. To load the compressor, the UCM-CLD opens the load solenoid valve while keeping the unload solenoid valve closed. The pressurized oil flow then enters the cylinder and forces the slide valve to move over the rotors.
The compressor is unloaded when the load solenoid valve is kept closed and the unload solenoid valve is opened. Oil «trapped» within the cylinder is drawn out into the lower-pressure suction area of the compressor. As the pressurized oil leaves the cylinder, the slide valve gradually moves away from the rotors.
When both solenoid valves are closed, the present level of compressor loading is maintained.
Just prior to a normal compressor shutdown, the unload solenoid valve is energized and the slide valve moves to the fully-unloaded position, so the unit always starts fully unloaded.

Oil filter
All RTAA/RTAB units are equipped with a replaceable-element oil filter. The filter removes any impurities that could foul the solenoid valve orifices and compressor internal oil supply galleries. This also prevents excessive wear of compressor rotor and bearing surfaces. Refer to the maintenance portion of this manual for recommended filter element replacement intervals.

Caution :
The lubricating oils recognised by Trane have been subjected to extensive testing in our laboratories and have been found to give the required satisfactory results for use with Trane compressors.

The use of any oil not conforming to Trane required standards is at the sole responsibility of the user and could result in warranty cancellation.

Remote clear language display
The remote CLD is intented for indoor use and is not weathreproof. It is mounted in a molded plastic display box with a molded keypad. Aithough this is not the same as the membrane keypad of the unit's CLD, the key locations and labels are identical

Communication link wiring must be 1.5 mm^2 shielded, and not exeed 1500m for each link.

Remote CLD Mounting
All hardware (tools, screws,etc...) is to be field supplied. Figure 12 shows the remote CLD panel and the electrical access knockouts at the bottom and top of the panel. Remove the knockouts that will be used for wire entry, prior to mounting the panel.

Note : On the back of the panel is a knockout for an electrical outlet box, if one is to used.

Prior to mounting the panel, the actual microprocessing board needs to be carefully removed and set aside. To remove the board, open the protective door that cover the keypad. Remove the cover plate at the bottom of the keypad, by loosening the screw on the cover plate.
After removing the cover plate, remove the four srew that secure the keypad (one in each corner). The keypad can now be lifted out the display box.
Mark the location of the mounting holes, remove the box and drill the necessary holes in the surface. Put the display box back in position and secure it to the mounting with the required screws.

The microprocessing board can now be replaced in the display box with its four attaching screws.

Figure 13 : Remote CLD Panel

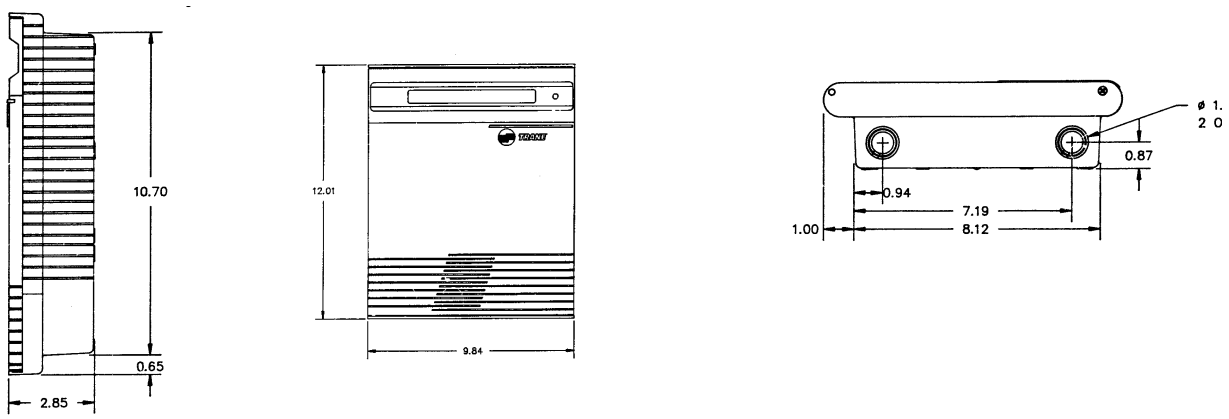

Remote CLD Panel Wiring
The Remote CLD requires a 24 V power source and a shielded, twisted-pair wire between the panel and the local CLD.

As shown in Figure 14 the wire runs from terminals J3-1 and J3-2 in the unit's buffer module (A55) to terminals J1-1 and J1-2 in the Remote CLD. Be sure that one lead is connected to the (+) terminal at each end and the other lead is connected to the (-) terminal at each end.

Do not run the shielded twisted-pair wire in a conduit that also contains circuits of greater than 30V

Attach the shield to a grounding lug in the unit's control panel. Cut and tape the shield at the Remote CLD panel

Connect the 24V power supply to terminals J2-1 and J2-2 in the Remote CLD panel. The polarity of the of the power source is not a concern, but the power source must be grounded to terminal J2-3

Note : A field supplied 24V, 40VA separation transformer with electrostatic screen must be used as a power supply for the Remote CLD.

If the Remote CLD share the 24V power source with other components, a 24V/24V transformer will be installed before the Remote CLD to prevent control malfunctions.

Remote CLD Operation
No specific settings are required to used the Remote CLD. In a multiple configuration, the Remote CLD has the capability to communicate with up to four units. Each unit requires a separate communication link with the Remote CLD panel.

Terminals 1-3 are for the second unit.
Terminals 4-6 are for the third unit.
Terminals 7-9 are for the fourth unit.

Figure 14 : Wiring Diagram CLD Module

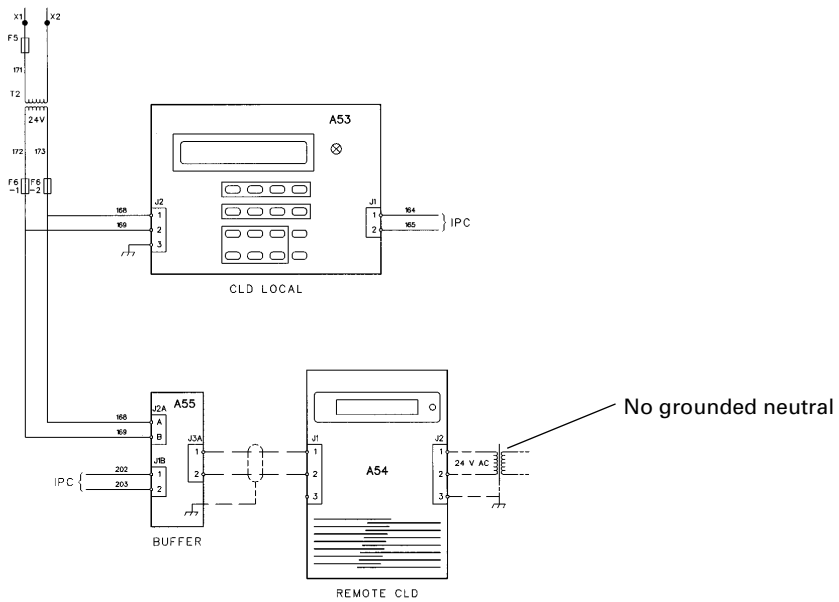

Note : IPC = Serial link.

Pre-start procedures

General
When installation is complete, but prior to putting the unit into service, the following pre-start procedures must be reviewed and verified correct :

1) Inspect all wiring connections to be sure they are clean and tight.

> **Warning :** Disconnect all electric power including remote disconnects before servicing. Failure to disconnect power before servicing can cause severe personal injury or death.
>
> **Caution :** Check the tightness of all connections in the compressor power circuits (disconnects, terminal block, contactors, compressor junction box terminals, etc.). Loose connections can cause overheating at the connections and undervoltage conditions at the compressor motor.

2) Verify that all refrigerant valves, as shown in figure 10, are «OPEN».

> **Caution :** Do not operate the unit with the compressor, oil discharge and liquid line service valves «CLOSED». Failure to have the «OPEN» may cause serious compressor damage.

3) Check the power voltage to the unit at the main power fused-disconnect switch. Voltage must be within the voltage utilization range, given in table 1 and also stamped on the unit nameplate. Voltage imbalance must not exceed 2%. Refer to «Unit voltage imbalance», below.
4) Check the unit power phasing.
5) Check the condenser fans to be sure that they rotate freely in the fan openings and that each is securely attached to its fan motor shaft.
6) Energize the compressor sump heaters by closing the unit main disconnects. If unit-mounted disconnects are used, they must also be closed. If the unit does not have the optinal control power transformer, 115 VAC power must be filed supplied to terminals 1TB3-1 and 1TB3-2. The chiller switch must be in the STOP/RESET position.

> **Caution :** The compressor sump heaters must be energized for a minimum of 24 hours prior to unit operation, to prevent compressor damage caused by liquid refrigerant in the compressor at start-up.

7) Energize the evaporator heat tape.
8) Fill the evaporator chilled water circuit. Refer to table 1 for evaporator liquid capacities. Vent the system while it is being filled. Open the vent on the top of the evaporator during filling and close when filling is completed.

> **Caution :** Do not used untreated or improperly treated water. Equipment damage may occur.
>
> **Caution :** Do not fill chilled water system unless the evaporator heat tape has been energized.

9) Close the fused-disconnect switch (es) that supplies power to the chilled water pump starter.
10) Start the chilled water pump to begin circulation of the chilled water. Inspect all piping for leakage and make any necessary repairs.
11) With chilled water circulating through the system, adjust water flow and check water pressure drop through the evaporator are conform to the order specifications. Refer to figure 7.
12) Adjust chilled water flow switch (if installed) for proper operation.
13) Stop the chilled water pump.

Unit voltage power supply
Measure each leg of the supply voltage at the unit main power fused-disconnect. If the measured voltage on any leg is not within specified range, notify the supplier of the power and correct the situation before operating the unit.

> **Caution :** Inadequate voltage to the unit can cause control components to malfunction and shorten the life of relay contact, compressor motors and contactors.

Unit voltage unbalance
Excessive voltage imbalance between the phases of a three-phase system can cause motors to overheat and eventually fail. The maximum allowable imbalance is 2%. Voltage imbalance is determined using the following calculations :

$$\% \text{ Imbalance} = \frac{(V_x - V_{ave}) \times 100}{V_{ave}}$$

$$V_{ave} = (V_1 + V_2 + V_3)/3$$

V_x = phase with greatest difference from V_{ave} (without regard to sign).

For example, if the three measured voltages are 375, 389 and 388 volts, the average would be :

$$\frac{375+388+389}{3} = 384$$

The percentage of imbalance is then :

$$\frac{100\ (375-384)}{384} = 2.34\%$$

This exceeds the maximum allowable (2%) by 0.34 percent.

Water system flow rates
Establish a balanced chilled water flow through the evaporator. Chilled water flow rates below the minimum values will result in laminar flow, which reduces heat transfer and causes either loss of electronic expansion valve control or repeated nuisance, low temperature cutouts. Flow rates that are too high can cause tube erosion and damage to the tube supports and baffles in the evaporator.

> **Caution :** Once the evaporator is filled with water, the evaporator heat tapes must be energized to protect the evaporator from freezing and bursting if the outdoor air temperature drops below freezing.

Water system pressure drop
Measure chilled water pressure drop through the evaporator at the field-installed pressure taps on the system water piping. See figure 7. Use the same gauge for each measurement.
Pressure drop readings should be approximately those shown in the pressure drop charts, figure 8.

UCM-CLD set-up
Refer to manual of operation of the UCM-CLD, reference L80 IM 025 E.

Start-up procedures

If the pre-start checkout, as discussed above, has been completed, the unit is ready to start.
- Move the chiller switch on the UCM-CLD to the STOP/RESET position.
- As necessary, adjust the setpoint values in the UCM menus, as describe in the Operation Manual.
- Close the fused-disconnect switch for the chilled water pump. Energize the pump to start chilled water circulation.
- Check the service valves on the discharge line, suction line, oil line and liquid line for each circuit. These valves must be open (backseated) before starting the compressors.

Caution : To prevent compressor damage, do not operate the unit until all refrigerant and oil line service valves are opened.

Caution : The compressor sump heaters must be energized for a minimum of 24 hours prior to unit operation, to prevent compressor damage caused by liquid refrigerant in the compressor at start-up.

- Energize the evaporator heat tape by closing the field-installed fused-disconnect.
- Move the chiller switch to AUTO LOCAL. If the chiller control calls for cooling and all safety interlocks are closed, the unit will start. The compressor(s) will load and unload in response to the temperature of the leaving chilled water temperature.

Once the system has been operating for approximately 30 minutes and has become stabilized, complete the start-up procedures, as follows :
- Check the evaporator and condenser refrigerant pressures on the UCM-CLD.
- Measure the system superheat. Refer to «System superheat», below.
- Measure the system subcooling. Refer to «System subcooling», below.
- A shortage of refrigerant is indicated if operating pressures are low and subcooling is also low. If the operating pressures, sight glass, superheat and subcooling rea dings indicate a refrigerant shortage, gas charge refrigerant into each circuit, as required. With the unit running, add refrigerant vapor by connecting the charging line to the suction service valve until operating conditions become normal.

Caution : If both suction ans discharge pressures are low but subcooling is normal, a problem other than refrigerant shortage exists. Do not add refrigerant, as this may result in overcharging the circuit.

Caution : Use only refrigerants specified on the unit nameplate, to prevent compressor damage and insure full system capacity.

- If operating conditions indicate a refrigerant overcharge, remove refrigerant at the liquid line service valve. Allow refrigerant to escape slowly, to minimize oil loss. Do not discharge refrigerant into the atmosphere.

Warning : Do not allow refrigerant to directly contact skin or injury from frostbite may result.

System superheat
Normal superheat for each circuits is approximately 4°C at full operating load. Superheat temperature can be expected to be moving around the 4°C setpoint when the chiller is pulling down, the compressor slide valve is being modulated, or the fans are staging on either the same or opposite circuits. Superheat can be expected to settle out at approximately 4°C when the above items stabilize.

System subcooling
Normal subcooling for each circuit ranges from 5°C to 10°C, depending on the unit. If subcooling for either circuit does not approximate these figures, check the superheat for the circuit and adjust, if required. If superheat is normal but subcooling is not, contact a qualified Trane service technician.

Unit shutdown procedures

Temperatures shutdown and restart

To shut the unit down for a short time, use the following procedure :

1. Move the chiller switch to STOP/RESET. The compressors will continue to operate and, after unloading for 20 seconds, will stop when the compressor contactors de-energize. The condenser fans will be de-energized at this time.
2. The unit disconnect switch and unit mounted disconnect (if installed) should remain closed to keep the compressor sump heaters energized.
3. Maintain power to 1TB3-11 and 1TB3-12 to keep the evaporator heat tape energized.
4. Stop the chilled water circulation by turning off the chilled water pump.

To restart the unit after a temporary shutdown, restart the chilled water pump and move the chiller switch to either of the AUTO positions. The unit will start normally, provided the following conditions exist :

1. The UCM must receive a call for cooling and the differential to start must be above the setpoint.
2. All system operating interlocks and safety circuits must be satisfied.

Extended shutdown procedure

The following procedure is to be followed if the system is to be taken out of service for an extended period of time, eg. seasonal shutdown :

1. Test the condenser and high-side piping for refrigerant leakage.

2. Open the electrical disconnect switches for the chilled water pump. Lock the switch in the «OPEN» position.

3. Close all chilled water supply valves. Drain the chilled water from the evaporator. If the unit will be exposed to freezing ambient conditions, flush the evaporator with an antifreeze solution or energize the evaporator heat tape.

4. Open the unit main electrical disconnect and unit mounted disconnect (if installed) and lock on the «OPEN» position.

5. At least every three months (quarterly), check the pressure in the unit and leak test it with an electronic leak detector to verify that the refrigerant charge is intact.

System restart after extended shutdown

Follow the procedures below to restart the unit after extended shutdown :

1. Verify that the liquid line service valves, oil line, compressor discharge service valves and suction service valves (if installed) are open (backseated).

> **Caution :** To prevent damage to the compressor, be sure that all refrigerant valves are open before starting the unit.

2. Close the main disconnect and unit mounted disconnect (if installed) to energize the compressor sump heaters.

> **Caution :** The compressor sump heaters must be energized for a minimum of 24 hours prior to unit operation, to prevent compressor damage caused by liquid refrigerant in the compressor at start-up.

3. Maintain power to 1TB3-11 and 1TB3-12 for the evaporator heat tape connections.

4. Fill the evaporator chilled water circuit. Refer to table 1 for evaporator liquid capacities. Vent the system while it is being filled. Open the vent on the top of the evaporator during filling and close when filling is completed.

> **Caution :** Do not used untreated or improperly treated water. Equipment damage may occur.

5. Close the fused disconnect switch that provides power to the chilled water pump.

6. Start the chilled water pump and, while chilled water is circulating, inspect all piping for leakage. Make any necessary repairs before starting the unit.

7. While the chilled water is circulating, adjust the chilled water flow and check the chilled water pressure drop through the evaporator.

8. Adjust the flow switch on the evaporator piping (if installed) for proper operation.

9. Stop the chilled water pump. The unit is now ready for start-up as described in «Start-up procedures».

Maintenance

Periodic maintenance

General

Perform all maintenance procedures and inspections at the recommended intervals. This will prolong the life of the equipment and minimize the possibility of costly failures. Use an «Operator's log», to record an operating history for the unit. The log serves as a valuable diagnostic tool for service personnel. By observing trends in operating conditions, an operator can anticipate and prevent problem situations before they occur.
If the unit does not operate properly during maintenance inspections, refer to «Diagnostics and troubleshooting».

Weekly maintenance

After the unit has been operating for approximately 30 minutes and the system has stabilized, check the operating conditions and complete the procedures below :

- Check the evaporator refrigerant pressure and the condenser refrigerant pressure (25) in menu 2 on the UCM-CLD.

Caution : A clear sight glass alone does not mean that the system is properly charged. Also check system superheat, subcooling, and unit operating pressures.

- If operating pressures and sight glass conditions seem to indicate refrigerant shortage, measure the system superheat and system subcooling. Refer to «System superheat» and «System subcooling».
- If operating conditions indicate a refrigerant overcharge, remove refrigerant at the liquid line service valve. Allow refrigerant to escape slowly, to minimize oil loss. Do not discharge refrigerant into the atmosphere.
- Inspect the entire system for unusual conditions and inspect the condenser coils for dirt and debris. If the coils are dirty, refer to «Coil cleaning».

Monthly maintenance

- Perform all weekly maintenance procedures.
- Measure and record the system superheat. Refer to «System superheat».
- Measure and record the system subcooling. Refer to «System subcooling».
- Manually rotate condenser fans to insure proper clearance on the fan openings.

Warning : Position all electrical disconnects in the «OPEN» position and lock them, to prevent injury or death due to electrical shock.

Annual maintenance

- Perform all weekly and monthly maintenance procedures.
- Have a qualified service technician check the setting and function of each control. Inspect the condition of compressor and control contactors and replace as required.
- Inspect all piping components for leakage and damage. Clean out any inline strainers.
- Clean and repaint any areas that show signs of corrosion.
- Clean the condenser coils. Refer to «Coil cleaning».
- Clean the condenser fans. Check the fan assemblies for proper clearance in the fan openings and for motor shaft misalignment, abnormal end play, vibration and noise.
- Check the oil level.
- Oil acidity test

Coil cleaning

Clean the condenser coils at least once each year, or more frequently if the unit is located in a «dirty» environment. This will maintain proper unit operating efficiencies. Follow the detergent manufacturer's instructions as closely as possible to avoid damage to the coils.
To clean the coils, use a soft brush and a sprayer.

Note : If the detergent mixture is strongly alkaline (pH value greater than 8.5), an inhibitor must be added.

Chemically cleaning the evaporator

The chilled water system is a closed-loop and therefore should not accumulate scale or sludge. If the chiller becomes fouled, first attempt to dislodge the material by backflushing the system. If, after several attemps, chemically clean the evaporator.

Caution : Do not use an acid type cleaning agent that will damage steel, galvanized steel, polypropylene, or internal copper components.

With this information, water treatment firms will be able to recommend a suitable chemical for use in this system.
A typical configuration for chemical cleaning is shown in figure 14. The supplier of the cleaning chemicals must provide or approve :

All of the materials used in this configuration
The amount of chemicals used
The length of time the chemicals are used
Any safety precautions and handling instructions

Service pumpdown
The UCM-CLD provides a one-time "Service Pumpdown" mode with which the service engineer can start a particuliar compressor and run it for one minute to pump-down the refrigerant circuit low side.

Caution : Do not use this procedure more than once. The suction pressure must be monitored with an external gauge. If the suction pressure drops below 1,3 bar, press the "Stop" key to cycle off the compressor.

Figure 15: Oil level

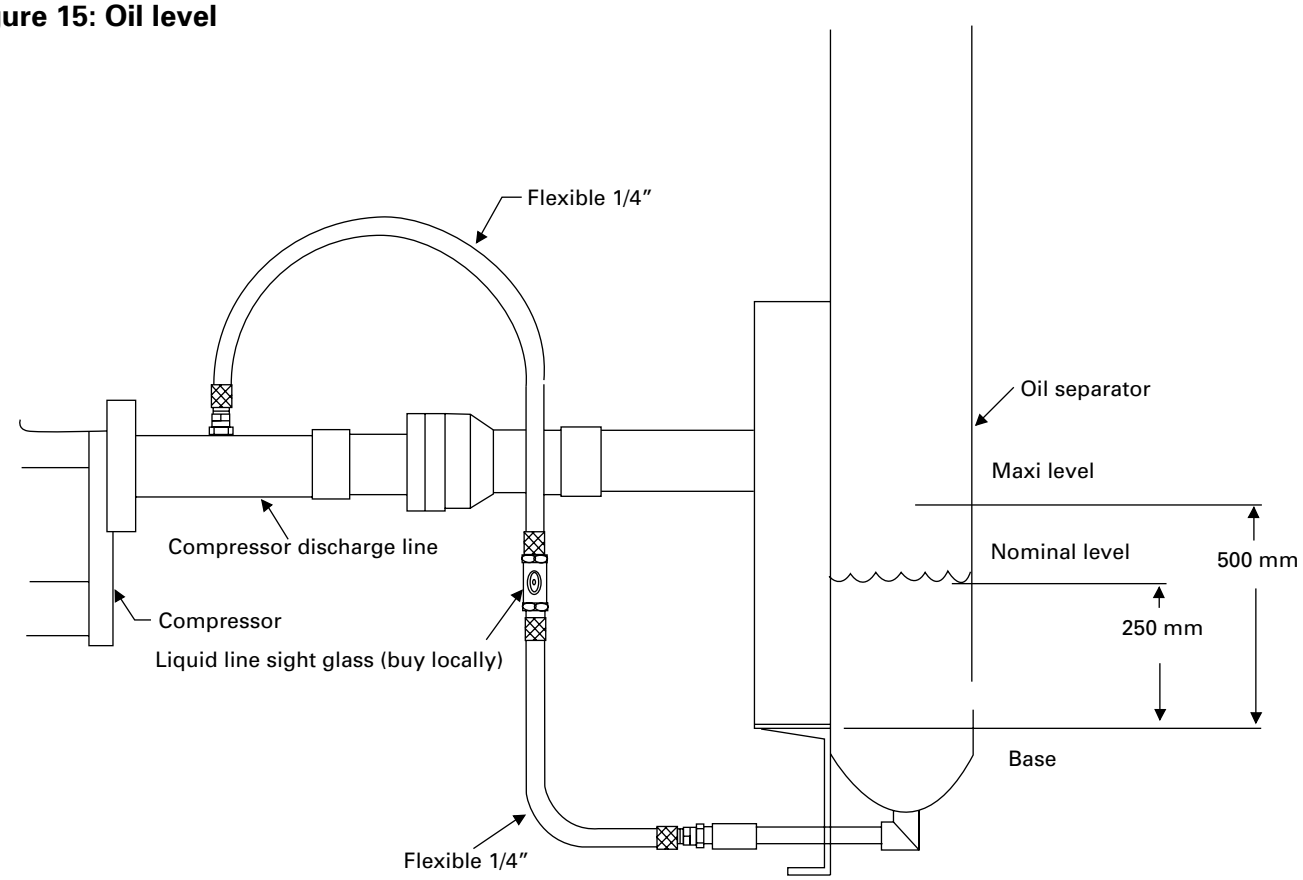

Warning : Do not check the oil level when the unit is operating. There is a risk of losing a great quantity of oil.

Checking the separator oil level

Checking the oil level is very important for the unit efficiency. Too important an oil charge would lead to a loss of evaporator efficiency. A lack of oil could damage the compressor or increase the noise level of the unit. Perform the following procedure, and refer to figure 15.

1) Stop the unit after at least 15 minutes of full load operation.
2) Connect the 1/4" tube and the liquid sight glass between the drain valve of one or other of the oil separators and the Schrader valve on the compressor discharge line (figure 15). Vent the incondensable vapour. We recommend you use a Schrader quick connection stop valve at the ends of the 1/4" tube. This will facilitate assembly and disassembly of the tubes and will minimise losses of oil and refrigerant.
3) When the unit has stopped for 10 minutes, move the liquid sight glass up or down until the oil level is visible.
4) When you have verified the oil level, remove the 1/4" tube and the liquid sight glass.

CHHB Compressor oil filter replacement

Note :
Routine changing of the oil or the oil filter is not recommended. The oil filter is oversized for this application and should not require replacement.

The oil should be replaced only if analysis reveals that oil is contaminated.
The filter should be replaced if the oil has to be removed or if the differential pressure switch senses a pressure drop across the oil filter over 3.5 bar.

To measure the pressure drop across the hydraulic circuit perform the following test.
Measure the high side pressure at the Schraeder valve on the oil coder outlet.
To measure the low side pressure, use the Schraeder valve located after the oil line solenoid valve.
The pressure difference at these points is the pressure drop the oil differential switch is sensing.

To change the oil filter, refer to figure 14 and follow the steps listed below.

1. Shut off the compressor and disconnect all electrical service to the compressor.
2. Shut off service valves A and B.
3. Recover oil from the Schraeder C.
4. Remove the oil filter element.
5. Install the new filter element filled with oil.
6. Coat the new gasket with refrigerant oil and tight the assembly.
7. Open valve A and B.

Figure 16 : Oil filter change

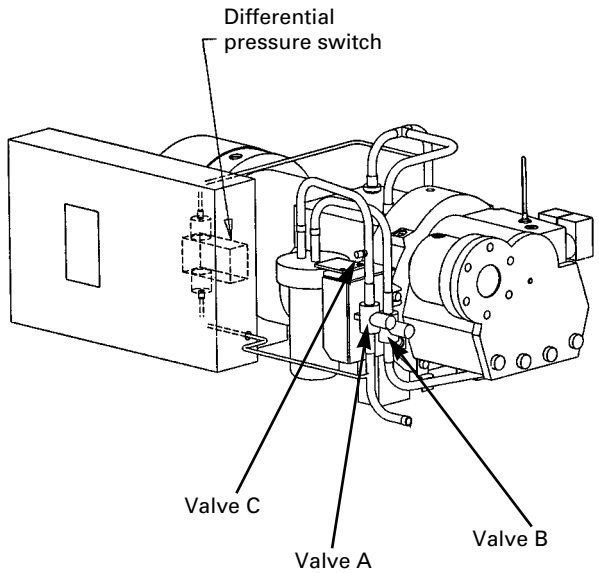

CHHN Compressor oil filter change

Note :
Routine changing of the oil or the oil filter is not recommended. The oil filter is oversized for this application and should not require replacement.

The oil and filter should be replaced only if analysis reveals that the oil is contaminated. Capacities are shown in Table 1.

Pressure drops across the oild filter is shown in Figure 17. Oil filter pressure drop is the difference between the pressure at the oil filter cover plate Schraeder valve, on top of the compressor.
To change the oil filter in the unit, refer to Figure 15 and follow the steps listed below.

1. Shutt off the compressor and disconnect all electrical service to the compressor.
2. Connect manifold gauge sets to the backseat ports of the suction and discharge service valves and the Schraeder valve on the oil filter cover plate.
3. Frontseat the suction and discharge service valves. Separate the valve coupling at the oil supply to the compressor or, on later chillers, frontseat the oil supply line angle valve.
4. Recover refrigerant from the three connections in Step 2.

Note : The Schraeder valve may have a high quantity of oil.

WARNING :
Insure that pressure is relieved from oil filter before proceeding to step 5.

5. Remove the seven bolts on the oil filter cover. A pan may be necessary to catch any oil that is released after the cover is loosened.

Note : Observe the placement of copper gasket under one bolt head.

6. Remove the cover and oil filter element.

7. Install the new filter element.

8. Coat the new cover gasket with oil.

9. Install the cover plate plate and cover plate gasket.

10. Install a new copper gasket under the bolt head that had one at time of removal. Replace all other bolts and tighten to 20 m.kg.
11. Energize the three solenoid valves on the compressor by jumpering the proper terminals at the UCM.
12. Evacuate to 400 microns from the three ports in Step 2.
13. De-energize the three solenoid valves in Step 11.
14. Reconect the valve coupling that was separated in Step 3 or, on later chillers, backseat the oil supply line angle valve.

Note : Insure that this step is performed before Step 5, as this will insure that the oil filter housing is full of oil before the compressor is started.

15. Backseat the suction and discharge service valves.
16. Remove the manifold gauge sets.

Figure 17 - Oil filter change

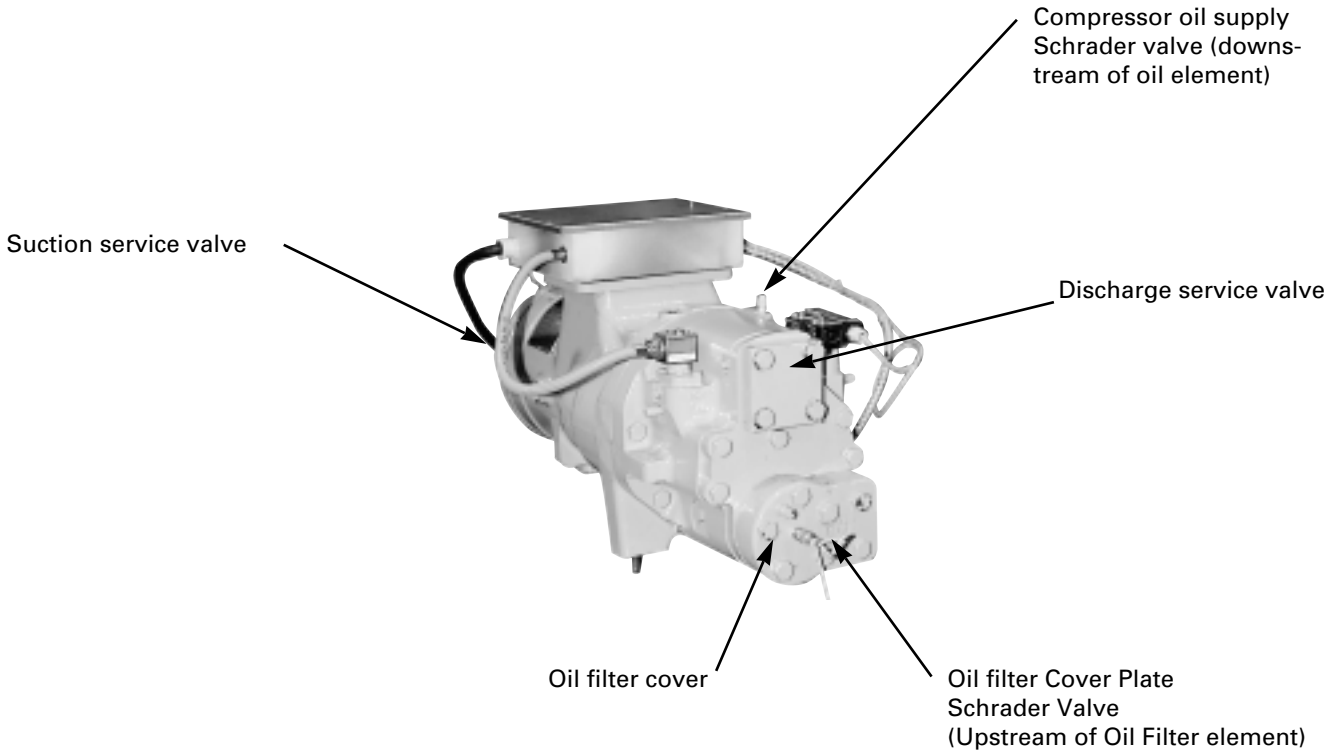

Figure 16 - Oil pressure drop

35 & 40 Ton compressor oil filter replacement chart

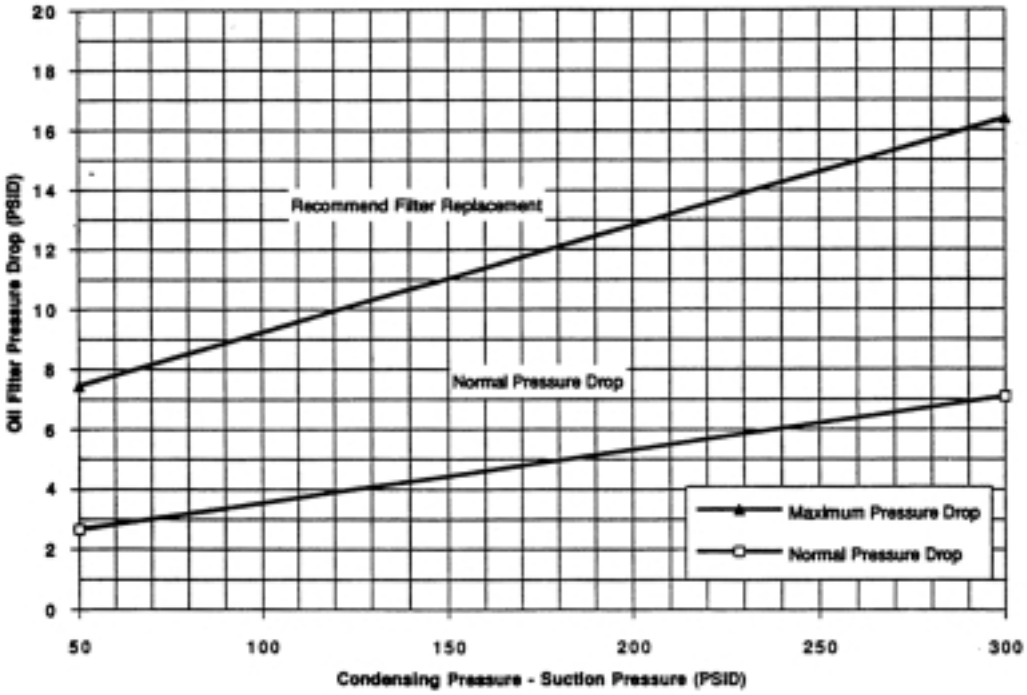

50 & 60 Ton Compressor Oil Filter Replacement Chart

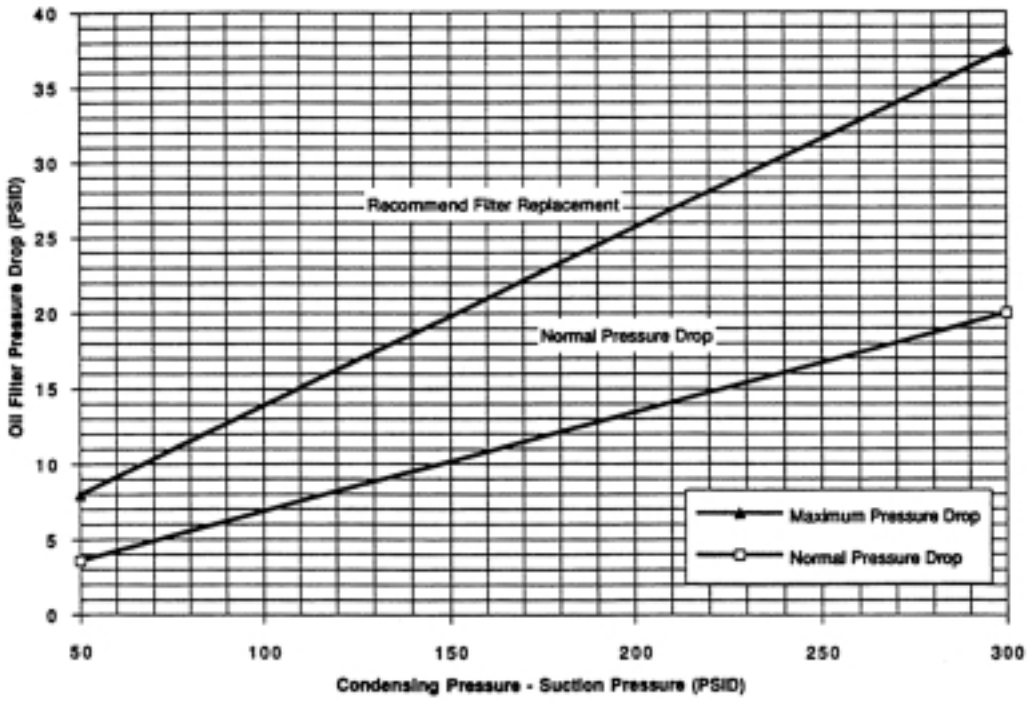

Start log sheet (compressors A and B)

Job Name	Elevation Above
Job Location	Sea Level m
Unit Model No.	S.O. No.
Unit Serial No. Nameplate Volt	Ship Date

Comp	Model No.	
A	Serial No.	Nameplate RLA
Comp	Model No.	
B	Serial No.	Nameplate RLA

Cond Fan Motor RLA	Evap H20	Design		Actual	
Heat Tape Volt	Pres. Drop	kPa	l/s	kPa	l/s

Fifteen Minute Intervals

Unit Voltage	A-B				
	A-C				
	B-C				
Compressor A Amperage	1				
	2				
	3				
Compressor B Amperage	1				
	2				
	3				
Unit Operator Mode					
Last Diagnostic					
Evap water Ent °C					
Evap water Lvg °C					
Comp A Mode					
Comp B Mode					
Outdoor Air °C					
Comp A Suction °C					
Comp B Suction °C					
Comp A Sat. Evap °C					
Comp B Sat. Evap °C					
Comp A Evap Pres #					
Comp B Evap Pres #					
Comp A Sat. Cond °C					
Comp B Sat. Cond °C					
Comp A Cond Pres #					
Comp B Cond Pres #					
Comp A Starts					
Comp B Starts					
Comp A Hours					
Comp B Hours					
Condenser Fans On	B6 B5 B4 B3 B2 PNL	B6 B5 B4 B3 B2 PNL	B6 B5 B4 B3 B2 PNL	B6 B5 B4 B3 B2 PNL	
Comments					

Date	SVC Tech	Owner

Start log sheet (compressors C and D)

Job Name	Elevation Above
Job Location	Sea Level m
Unit Model No.	S.O. No.
Unit Serial No. Nameplate Volt	Ship Date

Comp	Model No.	
C	Serial No.	Nameplate RLA
Comp	Model No.	
D	Serial No.	Nameplate RLA

Cond Fan Motor RLA	Evap H20	Design		Actual	
Heat Tape Volt	Pres. Drop	kPa	l/s	kPa	l/s

Fifteen Minute Intervals

Unit	A-B				
Voltage	A-C				
	B-C				
Compressor C	1				
Amperage	2				
	3				
Compressor D	1				
Amperage	2				
	3				
Unit Operator Mode					
Last Diagnostic					
Evap water Ent °C					
Evap water Lvg °C					
Comp C Mode					
Comp D Mode					
Outdoor Air °C					
Comp C Suction °C					
Comp D Suction °C					
Comp C Sat. Evap °C					
Comp D Sat. Evap °C					
Comp C Evap Pres #					
Comp D Evap Pres #					
Comp C Sat. Cond °C					
Comp D Sat. Cond °C					
Comp C Cond Pres #					
Comp D Cond Pres #					
Comp C Starts					
Comp D Starts					
Comp C Hours					
Comp D Hours					
Condenser Fans On	B6 B5 B4 B3 B2 PNL	B6 B5 B4 B3 B2 PNL	B6 B5 B4 B3 B2 PNL	B6 B5 B4 B3 B2 PNL	
Comments					

Date	SVC Tech	Owner

Safety recommendations

To avoid accidents and damage, the following recommendations should be observed during maintenance and service visits :

1. The maximum allowable pressures for system leak testing on low and high pressure side are given in the chapter "Installation". Always provide a pressure regulator.
2. Disconnect the main supply before any servicing on the unit.
3. Service work on the refrigeration system and the electrical system should be carried out only by qualified and experienced personnel.

Maintenance contract

It is strongly recommended that you sign a maintenance contract with your local Service Agency. This contract provides regular maintenance of your intallation by a specialist in our equipment. Regular maintenance ensures that any malfunction is detected and corrected in good time and minimizes the possibility that serious damage will occur. Finally, regular maintenance ensures the maximum operating life of your equipment. We would remind you that failure to respect these installation and maintenance instructions may result in immediate cancellation of the warranty.

Training

The equipment described in this manual is the result of many years of research and continuous development. To assist you in obtaining the best use of it, and maintaining it in perfect operating condition over a long period of time, the constructor have at your disposal a refrigeration and air conditioning service school. The principal aim of this is to give operators and maintenance technicians a better knowledge of the equipment they are using, or that is under their charge. Emphasis is particularly given to the importance of periodic checks on the unit operating parameters as well as on preventive maintenance, which reduces the cost of owing the unit by avoiding serious and costly breakdown.

The constructor's policy is one continuous product improvement, and he reserves the right to alter any details of the products at any time without notice

This publication is a general guide to install, use and properly maintain our products. The information given may be different from the specification for a particular country or for a specific order. In this event, please refer to your nearest office.

For additional information, contact :

Distributor / Installer stamp

All rights reserved. No part of this publication may be reproduced or transmitted in any form or by any means without the written authorization of the constructor.

C20 IM 004 E - 1199•
Supersedes C20 IM 004 E - 0498

Société Trane - Société Anonyme au capital de 41 500 000 F - Route de Chamagne - 88130 Charmes - France -
Siret 306 050 188-00011 - RCS Epinal B 306 050 188 - Numéro d'identification taxe intracommunautaire : FR 83 306050188

An American Standard Company