Библиотека СОК

TRANE®

Owner Manual

UCM-CLD Chiller Control System

RLC-SVU02C-E4

General information

Foreword

These instructions are given as a guide to the operation of the controller(s) mounted on Trane RTAD chillers. They do not contain full service procedures necessary for the continued successful operation of this equipment. The services of a qualified technician should be employed through the medium of a maintenance contract with a reputable service company. Read this manual thoroughly before unit start-up.

Warnings and cautions

Warnings and Cautions appear at appropriate sections throughout this manual. Your personal safety and the proper operation of this machine require that you follow them carefully. The constructor assumes no liability for installations or servicing performed by unqualified personnel.

WARNING! : Indicates a potentially hazardous situation which, if not avoided, could result in death or serious injury.

CAUTION! : Indicates a potentially hazardous situation which, if not avoided, may result in minor or moderate injury. It may also be used to alert against unsafe practices or for equipment or property-damage-only accidents.

Safety recommendations

To avoid death, injury, equipment or property damage, the following recommendations should be observed during maintenance and service visits:

1. The maximum allowable pressures for system leak testing on low and high pressure side are given in the chapter "Installation". Always provide a pressure regulator.

2. Disconnect the main power supply before any servicing on the unit.

3. Service work on the refrigeration system and the electrical system should be carried out only by qualified and experienced personnel.

Reception

On arrival, inspect the unit before signing the delivery note.

Reception in France only:
In case of visible damage: The consignee (or the site representative) must specify any damage on the delivery note, legibly sign and date the delivery note, and the truck driver must countersign it. The consignee (or the site representative) must notify Trane Epinal Operations - Claims team and send a copy of the delivery note. The customer (or the site representative) should send a registered letter to the last carrier within 3 days of delivery.
Note: for deliveries in France, even concealed damage must be looked for at delivery and immediately treated as visible damage.

Reception in all countries except France:
In case of concealed damage: The consignee (or the site representative) must send a registered letter to the last carrier within 7 days of delivery, claiming for the described damage. A copy of this letter must be sent to Trane Epinal Operations - Claims team.

Warranty

Warranty is based on the general terms and conditions of the manufacturer. The warranty is void if the equipment is repaired or modified without the written approval of the manufacturer, if the operating limits are exceeded or if the control system or the electrical wiring is modified. Damage due to misuse, lack of maintenance or failure to comply with the manufacturer's instructions or recommendations is not covered by the warranty obligation. If the user does not conform to the rules of this manual, it may entail cancellation of warranty and liabilities by the manufacturer.

Maintenance contract

It is strongly recommended that you sign a maintenance contract with your local Service Agency. This contract provides regular maintenance of your installation by a specialist in our equipment. Regular maintenance ensures that any malfunction is detected and corrected in good time and minimizes the possibility that serious damage will occur. Finally, regular maintenance ensures the maximum operating life of your equipment. We would remind you that failure to respect these installation and maintenance instructions may result in immediate cancellation of the warranty.

Training

To assist you in obtaining the best use of it and maintaining it in perfect operating condition over a long period of time, the manufacturer has at your disposal a refrigeration and air conditioning service school. The principal aim of this is to give operators and technicians a better knowledge of the equipment they are using, or that is under their charge. Emphasis is particularly given to the importance of periodic checks on the unit operating parameters as well as on preventive maintenance, which reduces the cost of owning the unit by avoiding serious and costly breakdown.

©American Standard Inc. 2001

Contents

General Information 2

Principles of operation of the UCM-CLD module 4

General Information 4
Operator's Interface 5
Operational Features 9
Hot Water Mode Control Module (model RTWB units only) 14

Diagnostics 17

Diagnostics 17
Default Description 18
Additional controller for Free Cooling / Heat Recovery Applications 23

Principles of Operation of the Module UCM-CLD

Figure 1 : Operator's interface

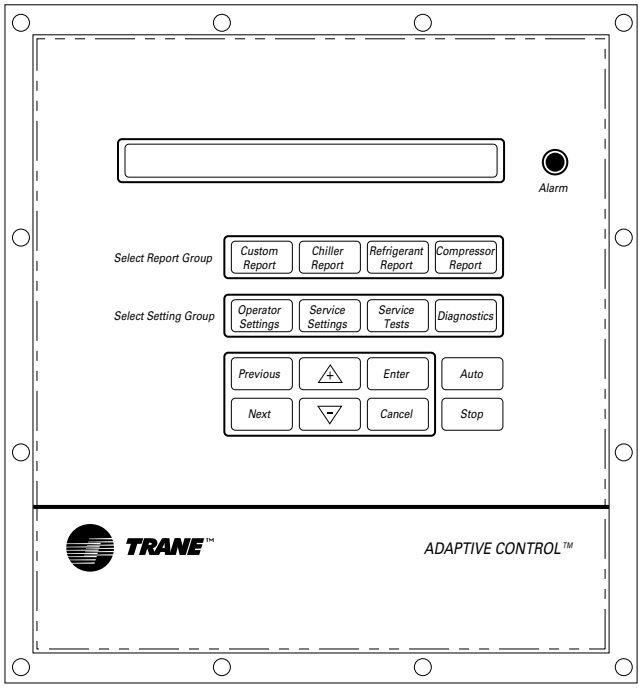

General Information

This UCM-CLD chiller control is composed of eight electronic modules, which each have their own 115V or 24V power supply and communicate with each other via a serial link. The names of the modules are linked to their functions.

Module	Functions
MCSP (Motor Compressor Start and Protection)	Safety, protection, and control of the helical-rotary compressor and its components
CPM (Chiller Protection and Management)	Safety, protection, and control of the chiller
EXV (Electronic Expansion Valves)	Control of both electronic expansion valves
CSR (Communication and Setpoint Reset)	Control of the serial communication, unit external setpoints and ice-making mode (optional module)
Local CLD (Local Clear Language Display)	Operator interface located in the front panel of the unit
Remote CLD (Remote Clear Language Display)	Operator interface located up to 1500m from the unit, able to communicate with up to four units of the same type (optional module)
TCI IV, IPCB (Tracer Communication Interface 4, Inter Processor Communication Buffer)	Protection of the internal communication bus in the unit from external interferences (optional factory-mounted module, compulsory when using a Remote CLD)
TCI IV, COM 3 (Tracer Communication Interface 4, COM 3)	Interface between the control of the unit and a Building Management System using Trane COMM 3 serial link

Principles of Operation of the Module UCM-CLD

Figure 2 : Control panel mounted on a model RTWA unit

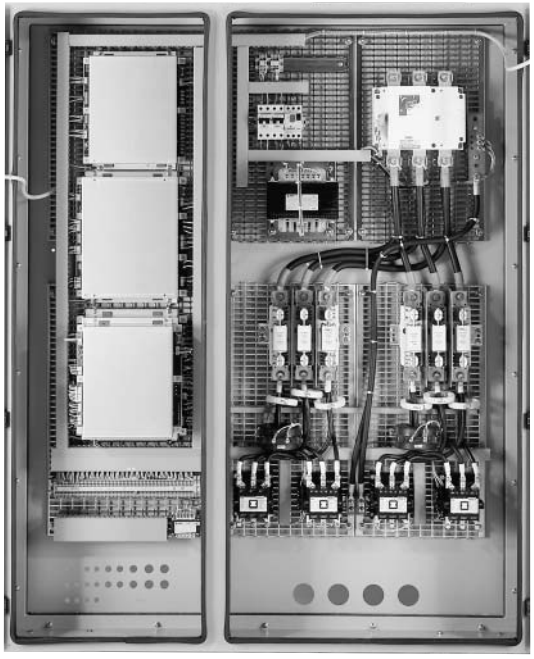

Operator's Interface

Digital Display
The display of control regulation and operating parameters, diagnostics, and error messages is a 2-line, 40-character, liquid-crystal display. The display has a LED backlight to read in low-light conditions and to warm up the display under low ambient temperatures. When powering up the system, the display is not lit and the message [SELF-TEST IN PROGRESS] is displayed. The screen can display error codes, settings of various setpoints, specified temperature and pressure values, and the status of operating parameters and options.

Keyboard
A 16-key touchpad allows both navigation between menus and the modification of parameters and setpoints. The keys are divided into two groups:

Individual Menu Keys	Control Keys
Chiller Report Menu	+ key
Custom Report Menu	- key
Refrigerant Menu	Previous key
Compressor Menu	Next key
Operator Settings Menu	Enter key
Service Settings Menu*	Cancel key
Service Test Menu*	Auto key
Diagnostics Menu	Stop key

* Levels 2 and 3 of the Service Settings Menu and the Service Test Menu are protected by a password and are reserved for Trane Service Engineers.

Principles of Operation of the Module UCM-CLD

Control Key Functions

[+] key If the information displayed is read-only, pressing this key will add it to the operator's menu. If the information can be modified, pressing this key will increase the value without exceeding the maximum possible value.

[-] key If the information displayed is read-only, pressing this key will remove it from the operator's menu. If the information can be modified, pressing this key will decrease the value without exceeding the minimum possible value.

[Previous] key Pressing this key allows the operator to scroll up to the previous information in the current menu. Each menu is looped, making it possible to scroll from the first item in the menu to the last item.

[Next] key Pressing this key allows the operator to scroll down to the next information in the current menu. Each menu is looped, making it possible to scroll from the last item in the menu to the first item.

[Enter] key Pressing this key allows the operator to validate a value after modification.

[Cancel] key This key should be pressed if a modified setting should not be saved.

[Auto key] Pressing this key allows the unit to be in Auto mode if it was previously placed in Stop mode with the [Stop] key. The unit cannot be forced into Auto mode if an external contact or the serial link has stopped it. When the unit is stopped by the remote interface (Remote CLD), the local mode order has priority.

[Stop] key Pressing this key allows the unit to be in Stop mode. In every case, and whatever the origin (except a local stop), the stop order and stop status have priority over a run order. The stop generated is a soft stop - the unit unloads before stopping.

Whether a [Stop] or [Auto] command will be accepted and stored is based on the following hierarchy:

1. Local Stop will always replace Local Auto, Remote Auto, and Remote Stop.
2. Local Auto will always replace Local Stop, Remote Auto, and Remote Stop.
3. Remote Stop will always replace Local Auto and Remote Auto. It will not replace Local Stop.
4. Remote Auto will always replace Local Auto and Remote Stop. It will not replace Local Stop.

Pressing the [Stop] key twice within five seconds will result in an Emergency Stop. The chiller will not unload.

Principles of Operation of the Module UCM-CLD

Parameters and setpoints within each menu

Menu	Parameters/setpoints	Range Minimum/Maximum
Chiller Report Menu	Active Chilled Water Setpoint	
	Evaporator Entering/ Leaving Chilled Water Temperature	
	Condenser Entering / Leaving Chilled Water Temperature	
	Active Ice-Storing Setpoint	
	Active Hot Water Setpoint	
	Entering/Leaving Hot Water Temperature	
	Current Active Setpoint limits	-17.8°/18.3°C
	Evaporator/Condenser Waterflow	
	Ambient Air Temperature	
	Sources of setpoints (Tracer, local CLD, external)	
Custom Report Menu	Custom-built by the operator (Can contain up to 20 settings)	
Refrigerant Report Menu	Condenser/Evaporator Refrigerant Pressures	
	Refrigerant Temperature in Condenser	
	Refrigerant Temperature in Evaporator	
Compressor Report Menu	Compressor Status	
	Time and Start Counters	
	Amps (% RLA)	
	Oil Temperature (GP compressor only)	
Operator Settings Menu	Setpoint Source	
	External Chilled Water Setpoint	
	External Hot Water Setpoint	
	Chilled Water Pump Operation	
	Chilled Water Pump Off Delay	1 min/30 min
	Ice Machine Control*	
	Panel Ice Termination Setpoint	-6.6°/-0.5°C
	Low Ambient Lockout	
	Low Ambient Lockout Setpoint	-28.8°/15.5°C
	Front Panel Current Limit Setpoint	40%/120%
	Front Panel Hot Water Setpoint	25°/60°C
	Front Panel Chilled Water Setpoint	-17.8°/18.3°C
	Design Delta Temperature Setpoint	2.2°/16.6°C
	External Current Limit Setpoint	
	Differential to Start Setpoint	1.1°/16.6°C
	Chilled Water Reset Type	
	Type Reset Ratio	
	Type Start Reset Setpoint	
	Type Max Reset Setpoint	0.0°/11.1°C

Principles of Operation of the Module UCM-CLD

Service Settings Menu**	**LEVEL ONE-Information adjusted by customer**	
	Unit Line Voltage	
	Over/Undervoltage Protection	
	Restart Inhibit Time	30/120 sec
	Balanced Compressor Starts and Hours	
	Display Language and Units	
	Programmable Relay Set-up	1/12
	External Circuit Lockout	
	LEVEL TWO- Information adjusted by Service Engineer	
	Address of Serial Link	0/64
	Display Lock Feature	
	Leaving Water Temperature Setpoint	
	Low Refrigerant Temperature Cutout Setpoint	
	Low Water Temperature EXV Air Compressor	
	Condenser Limit Setpoint	60/120%
	Phase Unbalance Protection	
	Phase Reversal Protection	
	Superheat Setpoint	2.2°/11.1°C
	EXV Control Response Circuit 1	2/200
	EXV Control Response Circuit 2	2/200
	Leaving Water Temperature Control Response Setpoint	
	Fan Control Deadband bias Circuit 1	-50/50
	Fan Control Deadband bias Circuit 2	-50/50
	LEVEL THREE-Configuration/Protection Information	
	Compressor Model Number Prefix	
	Number of Compressors	
	Oil Loss Differential Setpoint	
	Compressor A Ton	
	Compressor B Ton	
	Compressor C Ton	
	Compressor D Ton	
	Fan Control	
	Variable Speed Fan Circuit 1	
	Variable Speed Fan Circuit 2	
	Number of Fans Circuit 1	
	Number of Fans Circuit 2	
	Reduced Inrush Starting	
	Current Overload Compressor A	
	Current Overload Compressor B	
	Current Overload Compressor C	
	Current Overload Compressor D	
	Low Ambient Unit Half Air Flow Fan	
	Low Ambient Unit Two-Speed Motor	
	Night Noise Setback	
	Number of EXV Circuit 1	
	Number of EXV Circuit 2	
	Refrigerant Type	
Service Tests Menu	Perform Expansion Valve Test	
	Perform Circuit locking or Pump-out Test	
	Perform Compressor Test	
Diagnostics Menu	Current Diagnostics	
	History of Diagnostics	
	Manual Reset of Diagnostics	
	Erase History of Diagnostics	

* Option
**This menu has three access levels. The control has a display lock feature that can be locked at request after level one.

Principles of Operation of the Module UCM-CLD

Operational features

Entering evaporator water temperature
When one or both compressors are running, the UCM continually monitors and compares the entering and leaving evaporator-water temperatures. If the temperature of the entering water drops more than 1°C below the leaving water temperature for more than 55°C-seconds, the UCM uses this to indicate a loss of water flow through the evaporator. This will shut down that circuit's compressor and will display MMR diagnostic.

Current Limit Setpoint (CLS)
The current limit setpoints for the system are entered through the Clear Language Display menus. The current limit Setpoint for each compressor is shown in Table 1.

Table 1 – Compressor current limit Setpoint versus Chiller current limit Setpoint

System	Numbers of compressor in operation	
CLS	One	Two
120%	120	120
100%	120	100
80%	120	80
60%	120	60
40%	80	40

Based upon current levels received at the UCM, the compressor slide valve is modulated to prevent the actual chiller current from exceeding the CLS.

When a compressor is turned off, the CLS for the remaining running compressor shall be reset upward immediately. When a compressor is added, the CLS for the running compressor shall be ramped downward at a rate not less than 10% RLA per minute to the new Setpoint.

Electronic expansion valve (EXV) test
This test can be performed only when the "Stop" key has been pressed. It will confirm proper operation of the electronic expansion valve and the EXV module.

After the test has been initiated at the Clear Language Display, the UCM will:

1. Overdrive the EXV closed (25 seconds)
2. Overdrive the EXV open (25 seconds)
3. Overdrive the EXV closed (25 seconds)
4. Reset the display to disable and end the test

The EXV produces an audible clicking sound when it is driven against its end stops. Step 1 drives the EXV to its closed position, during which time service personnel can move from the CLD to the EXV.

Note: A tool may be needed to aid in hearing the clicking of the EXV, such as a screwdriver held between the EXV and the ear.

Current overload protection
The UCM continually monitors compressor current to provide unit protection in the event of an overcurrent or locked-rotor condition. Protection is based on the phase with the highest current and, if limits are exceeded, the UCM will shut down the compressor and will display an MMR diagnostic.

Leaving chilled-water temperature control
If the Auto key is pressed and a remote chilled-water Setpoint has been communicated, the UCM will control to that Setpoint. Otherwise, it will control to the front-panel Setpoint. Control is accomplished both by staging compressors and by modulating the slide valves on each compressor.

Upon start-up, if the leaving chilled-water temperature is dropping 0.8°C per minute or faster, the chiller will not load further.

Principles of Operation of the Module UCM-CLD

Chilled-Water Reset (CWR)
As an option, the UCM will reset the chilled-water temperature setpoint, based on either the return water temperature or the outdoor air temperature. The CSR module is necessary to perform CWR.

The following are selectable:
One of four reset types, from top to bottom in order of reset:
no CWR
RETURN WATER TEMPERATURE RESET
ZONE TEMPERATURE RESET
OUTDOOR AIR TEMPERATURE RESET

Leaving-water temperature cutout
This temperature cutout provides protection against freezing caused by low leaving-water temperature. The setpoint is both factory-set and adjustable from the Service Setting Menu. Temperatures below the setpoint will cause the UCM to accelerate reduction of chiller capacity, even to the point of compressor shutdown. A non-latching diagnostic will be generated if the LWT is below the cutout for more than 16°C-seconds.

There must be a minimum of 2.7°C between the cutout temperature and both the front-panel and active-chilled-water setpoints. The Clear Language Display will not permit setting of either the front-panel or active-chilled-water temperatures less than 2.7°C above the cutout temperature. The second line will state:

Limited by Cutout Setpoint (+) to change

If the leaving-water temperature cutout is set upward, the Clear Language Display will maintain the 2.7°C minimum and will automatically raise the settings on the front-panel and active-chilled-water setpoints, if necessary.

If the front-panel or active-chilled-water setpoints were adjusted, the display will show the following when the "enter" key is pressed:

FRONT PANEL CHILLED WATER SETPOINT HAS BEEN INCREMENTED DUE TO CUTOUT SETPOINT CHANGE

If the leaving-water temperature drops below the cutout setpoint while the compressors are de-energized, it will produce an IFW diagnostic. If the leaving-water temperature drops below the cutout setpoint while the compressors are energized for 16°C-seconds, the unit will shut down on an MAR diagnostic.

Principles of Operation of the Module UCM-CLD

Low refrigerant temperature cutout
Both circuits are protected from a saturated-evaporator refrigerant temperature that goes below this setting. The cutout Setpoint must be at a minimum of 8°C lower than the front panel or active chilled-water setpoints. See Table 2 for proper settings.

There must be a minimum of 8°C between the cutout temperature and active chilled-water setpoints. The Clear Language Display will not permit setting of the chilled-water temperature less than 8°C above this cutout temperature, and the display will flash the last valid temperature.

If the leaving-water temperature cutout is set upward, the Clear Language Display will maintain the 8°C minimum and will raise the settings of the chilled-water setpoints, if necessary.

If the chilled-water setpoints were adjusted, the display will show the following when the "Enter" key is pressed:

FRONT PANEL CHILLED WATER SETPOINT HAS BEEN INCREMENTED DUE TO CUTOUT SETPOINT CHANGE

If the saturated-evaporator refrigerant temperature for a circuit drops below this Setpoint for longer than 16°C-seconds, the circuit will be shut down and a CMR diagnostic will be displayed.

Table 2 – Leaving fluid temperature setpoints

Leaving chilled-water temperature °C	Leaving-water temperature cutout °C	Low refrigerant temperature cutout °C	Recommended %EG %	Solution freeze point °C
5	1.5	-3.9	0	0
4	1	-4.4	10	-4
3	0	-5.4	13	-5
2	-1	-6.4	16	-7
1	-2	-7.4	18	-8
0	-3	-8.4	20	-9
-1	-4	-9.4	22	-10
-2	-5	-10.4	24	-11
-3	-6	-11.4	26	-13
-4	-7	-12.4	27	-13
-5	-8	-13.4	29	-15
-6	-9	-14.4	31	-16
-7	-10	-15.4	32	-17
-8	-11	-16.4	33	-18
-9	-12	-17.4	34	-19
-10	-13	-18.4	36	-20
-11	-14	-19.4	36	-20
-12	-15	-20.4	37	-21

Principles of Operation of the Module UCM-CLD

Balanced compressor starts and hours
This feature is enabled/disabled in balanced starts and hours (service setting menu). When enabled, the UCM will start the compressor with the fewest starts and stop the compressor with the greatest number of operating hours, as determined by the "compressor starts" accumulator and the "compressor hours" accumulator. This will tend to balance out hours and starts equally over both compressors.

Phase imbalance protection

The Clear Language Display monitors the current in each phase and calculates the percentage of imbalance as follows:

$$\% \text{ imbalance} = \frac{(Ix - I\ average)}{I\ average}$$

I average = (I1 + I2 + I3) / 3

Ix = phase with greatest difference from I average (without regard to sign).

If phase-unbalanced protection (service setting menu) is enabled and the average three-phase current is greater than 80% RLA, and the percent of imbalance is calculated to exceed 15%, the UCM will shut down the compressor and display a CMR diagnostic.

Reverse rotation protection
The Clear Language Display monitors incoming current during start-up and will shut down the compressor within one second if phase reversal is detected.

CAUTION

Phase relationship during installation of unit power must be carefully controlled to ensure compressor protection against reversed rotation.

Oil failure protection
The logic of the UCM uses a comparison of the entering oil temperature at the compressor, to the saturated-condenser temperature, to determine if there is an oil line restriction.

The differential between the entering-oil and the saturated-condenser temperatures is referred to as the "oil loss differential setpoint" in the service settings menu.

If the entering oil temperature drops 2°C below the saturated-condenser temperature for more than 30 minutes, the circuit will shut down on a CMR diagnostic. The diagnostic will be presented as:

OIL SYSTEM FAULT - CKT X

DIP switch settings
Compressor overload DIP switches.

IPC address
The IPC address sets the address for Inter-Processor Communications of the Clear Language Display modules. The following are the IPC DIP switch settings for the modules.

IPC DIP	Module					
	A20-1		A20-2		A52	A9
Switch	SW1	SW2	SW1	SW2	SW1	SW1
1	OFF	Based	OFF	Based	OFF	OFF
2	OFF	On	OFF	On	OFF	OFF
3		Motor		Motor		
4		RLA		RLA		
5						

Principles of Operation of the Module UCM-CLD

2-10 V (dc)/4-20 mA input for External Chilled-Water Setpoint (CWS) or Current limit Setpoint (CLS)
When either external CWS or external CLS is used on the optional module A9, DIP switch SW1 positions 1 and/or 2 must be set to accommodate the type of of signal source the customer has chosen, either 2-10 V (dc) or 4-20 mA. Position SW1-1 sets 2-10 V (dc)/4-20 mA for external CLS. The "OFF" setting configures the external input for 2-10 V (dc)/4-20 mA for external CLS. The "OFF" setting configures the external input for 2-10V (dc), the "ON" setting configures the external input for 4-20 mA.

Leaving Condenser-Water Temperature control option - Model RTWB
If the machine is delivered with the LCWT control option (digit 49 position 3), the DIP switch on the module A9 must be set at position "ON." This option controls the condenser (CDS) leaving-water temperature (LCWT) based on a Hot Water Temperature setpoint (HWSP).

Limitations
In the heating mode, the chiller is not able to provide chilled water for a process. The leaving chilled-water temperature is not controlled. The UCM will only take care of safeties (water flow and freezing).
The option will provide contact to start/stop the evaporator and the condenser pumps. Any other devices such as valves (2 ways/3 ways), heat exchangers, variable-volume pumps, or other equipment will have to be controlled by another system.

Condenser Water Temperature Sensors - RTAD Total and Partial Heat Recovery
UCM-CLD will not display leaving and entering water temperature above 70.1°C, whereas on Total Heat Recovery units, the temperature on the additional controller could be higher. These conditions would appear in cooling mode only. This is not harmful to the operation of the chiller.

Mechanical control settings
The settings for the High Pressure switch are shown below:

Pressure Switch	Approval	Close	Open
B51 High Pressure	PED Czech republic Poland	19-20 bar	22-23 bar
B23 Low Pressure	PED Czech republic Poland -4°C<LWTE<+15°C	1.5 bar	0.5 bar
B23 Low Pressure	PED Czech republic Poland -12°C<LWTE<-4°C	1.2 bar	0.2 bar

Figure 3 - Water Temperature Sensor Installation - Model RTWB

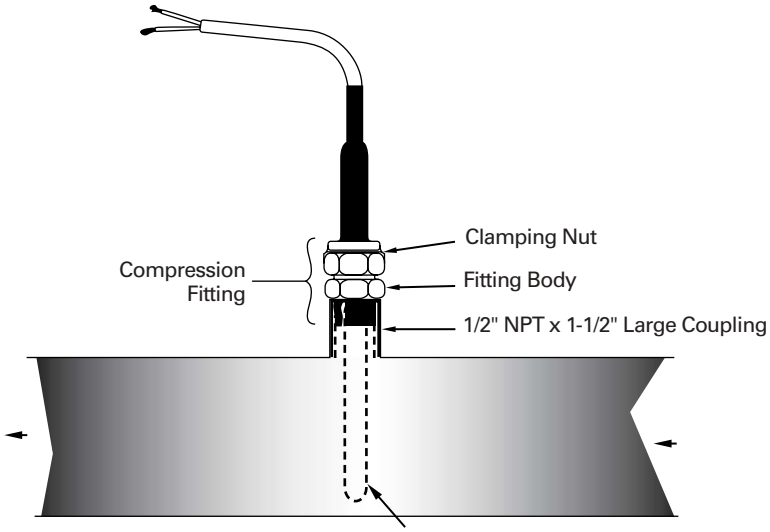

Principles of Operation of the Module UCM-CLD

Hot-Water Mode Control Module - Option Model RTWB

Scope of Supply

The following parts will be installed in the control panel of the unit:

- One Additional Board A70 with display
- One CDS LWT sensor + immersion well to be installed by the customer

The sensor will be connected to terminals 5 and 6 on terminal block TB2 of the A70 module.

Sequence of Operation

- Cooling Mode

The unit will operate as a standard chiller (i.e., the chiller controls the leaving chilled-water temperature). The condenser pump will be driven by the UCM relay. The chiller uses the cooling setpoint defined in the A70 Module.

- Heating Mode

In the heating mode, the chiller will control the condenser leaving-water temperature. The temperature sensor connected to the A70 Module should be located in the condenser leaving-water connection downstream from the condenser. The control is done by loading or unloading the chiller. To load or unload the chiller, a chilled-water setpoint reset is applied (i.e., setpoint decrease = load; setpoint increase = unload). The condenser pump is always in operation. The evaporator pump is still controlled by the UCM and is always in operation. The chiller uses the heating setpoint defined in the A70 Module.

The chiller will be stopped if the condenser leaving-water temperature is greater than the setpoint + the "differential to stop". The chiller will start if the condenser leaving-water temperature is lower than the setpoint - the "differential to start".

- Sensor Failure

In the heating mode, and if the CDS leaving-water temperature sensor fails, the chiller is stopped and the alarm relay of the A70 Module is energized. The chiller can operate in the cooling mode if the CDS leaving-water temperature sensor has failed.

A70 Module and UCM interaction

Chilled-Water setpoint: The A70 Module drives the chilled-water setpoint using a linear signal from an Analog Output of the A70 Module to the external chilled-water setpoint input of the UCM.

Chiller Enable/Disable: The A70 Module drives the chiller (on or off) using a dry contact from the A70 Module to the external start/stop input of the UCM.

CDS pump relay: The A70 Module drives the condenser pump relay.

In heating mode, the chiller controls the condenser leaving-water temperature. The A70 Heat Pump Module sends an external chilled-water setpoint to the UCM. This analog signal (factory set at 4-20mA) is constantly reset to match the heating load.

- Setpoint decreases → load the chiller
- Setpoint increases → unload the chiller

Note that the UCM still operates as a chilled-water controller.

On the UCM-CLD, the parameter "External Chilled Water setpoint" has to be enabled.

Human Interface

- Display parameters

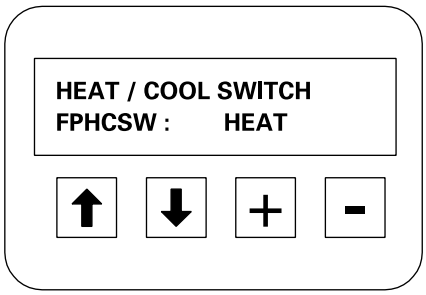

- Heat/Cool switch: the operator can select to operate either in cooling or heating mode.
  Default Setting : COOL

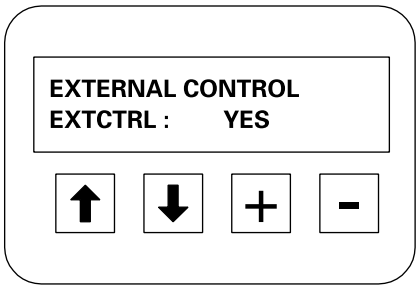

- External Control: Yes/No; Is the unit controlled by external signals?
  Default Setting : NO

Principles of Operation of the Module UCM-CLD

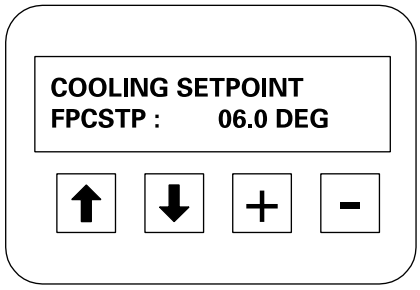

- Cooling Setpoint :
  from -12.0°C to 18.0°C
  Default Setting : 06.0 DEG

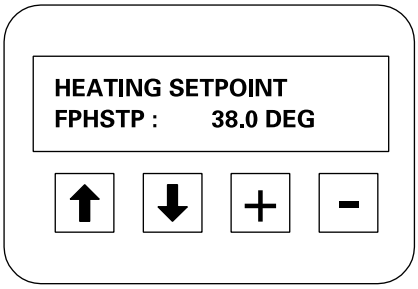

- Heating Setpoint :
  from 25°C to 60°C
  Default Setting : 35.0 DEG

The operation in Cooling or Heating mode is selected either from the operator interface or from a remote place using a binary input.

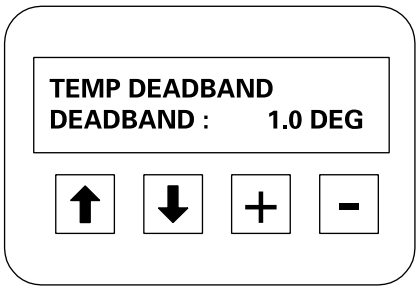

- Temperature Deadband :
  from 0.2°C to 2.0°C
  Default Setting : 1.2 DEG

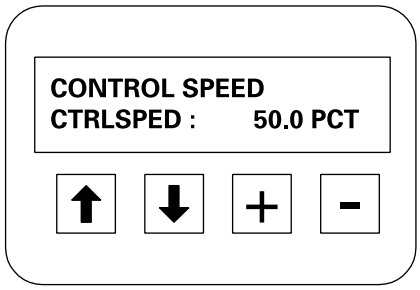

- Control Speed % : from 10 to 100%
  (10 = slow ; 100 = fast)
  Default Setting : 50%

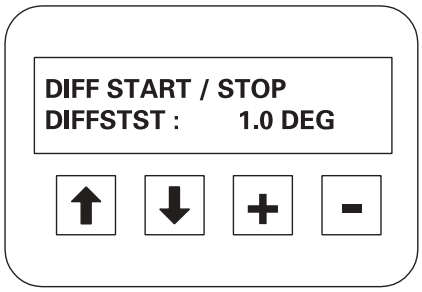

- Differential to start/stop :
  from 1.0°C to 2.5 °C
  Default Setting : 1.0 DEG

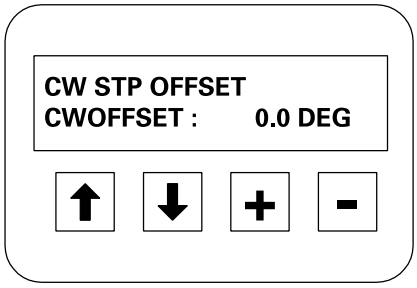

- Chilled-water adjustment offset :
  from -2.0°C to 2.0 °C
  Default Setting : 0.0 DEG

Principles of Operation of the Module UCM-CLD

External Controls
If the unit is controlled from external signals (parameter "External Control"), the following wiring will be done:
- External Start/Stop: Binary Input (close = start; open = stop). Terminals 1 and 2 on terminal block TB4.
- External Cooling setpoint: Analog Input from -17.8 to 18.3°C (4 - 20mA or 2 - 10V). Terminals 7 and 8 on terminal block TB2. Refer to table 4 for the setting rule.
- External Heating Setpoint: Analog Input from 25.0 to 60.0°C (4 - 20mA or 2 - 10V). Terminals 9 and 10 on terminal block TB2. Refer to Table 4 for the setting rule.
- External Heat/Cool Switch: Binary Input (close = heat; open = cool). Terminals 3 and 4 on terminal block TB4.

Table 3: Input values vs. External hot-water setpoint

Voltage (V(dc))	Current (mA)	Resulting hot-water setpoint (°C)
2.0	4.0	25
3.1	6.3	30
4.3	8.5	35
5.4	10.8	40
6.6	13.1	45
7.7	15.4	50
9.1	17.7	55
10.0	20.0	60

Table 4: Input values vs. External chilled-water setpoint

Voltage (V(dc))	Current (mA)	Resulting hot-water set point(°C)
3.6	7.2	-10
4.6	9.2	-5
5.6	11.3	0
6.7	13.3	5
7.7	15.4	10

Diagnostics

If there are no diagnostic messages, the selected menu item will be displayed continuously. If the diagnostics key is pressed and there are no active diagnostics, the readout on the display will be:

NO ACTIVE DIAGNOSTICS PRESENT

When a system malfunction occurs, one of the following appropriate diagnostic messages will be displayed:

*** A machine shutdown has occurred ! *** A machine shutdown occurred but has cleared “press (Next)”

*** A circuit shutdown has occurred ! *** A circuit shutdown occurred but has cleared “press (Next)”

*** Informational warning *** An informational warning occurred but has cleared “press (Next)”

When a circuit shutdown - manual reset (CMR) or a machine shutdown - manual reset (MMR) occurs, the red LED to the right of the display will flash. Otherwise this alarm LED is de-energized.

If more than one diagnostic is present, only the highest priority active diagnostic will be explained in detail. For example, if the diagnostics occur in the following order before the operator returns - IFW, MMR, CMR - the display will read:

*** A machine shutdown has occurred ! ***

because the MMR has the highest priority. However, as the operator moves through the diagnostic menu to the “Last diagnostic,” the [Diagnostic description] will show the CMR diagnostic as well as the IFW. If the “Next” key is pressed, the display will show all the other active and historic diagnostics.

The active diagnostic priorities, listed from highest to lowest are:

Machine shutdown - manual reset (MMR)
Machine shutdown - automatic reset (MAR)
Circuit shutdown - manual reset (CMR)
Circuit shutdown - automatic reset (CAR)
Informational warning (IFW)

Diagnostics

Default description

Displayed Code	Type	Description
Fault 87 Check External Chilled Water Setpt :	IFW	- Value out of range
Fault 89 Check External Current Limit Setpt :	IFW	- Value out of range
Fault 8A Chilled Water Flow (Ent Wtr Temp) :	MMR	1) Entering water temperature < leaving WT 2) No water flow 3) Defective EVP sensor
Fault 8E Evaporator Entering Water Temp Sensor :	MMR	- Defective sensor
Fault 8F Condenser Rfgt Temp Sensor - Ckt 1 :	MMR	-Defective sensor
Fault 90 Condenser Rfgt Temp Senspr - Ckt 2 :	MMR	- Defective sensor
Fault 93 Evaporator Rfgt Temp Sensor - Ckt 1 :	MMR	- Defective sensor
Fault 94 Evaporator Rfgt Temp Sensor - Ckt 2 :	MMR	- Defective sensor
Fault 9A Condenser Entering Water Temp Sensor :	IFW	- Defective sensor
Fault 9b Condenser Leaving Water Temp Sensor :	IFW	- Defective sensor
Fault A0 Zone Temp Sensor :	IFW	- Defective sensor
Fault A1 Outdoor Air Temp Sensor :	IFW	- Defective sensor
Fault Ab Evaporator Leaving Wtr Temp Sensor :	MMR	- Defective sensor
Fault b5 Low Pressure Cutout - Ckt 1 :	CMR	- LP pressure switch open
Fault b6 Low Pressure Cutout - Ckt 2 :	CMR	- LP pressure switch open
Fault bA Overload trip - Cprsr A :	CMR	- Current exceeded
Fault bb Overload Trip - Cprsr B :	CMR	- Current exceeded
Fault bC Overload trip - Cprsr C :	CMR	- Current exceeded
Fault bd Overload trip - Cprsr D :	CMR	- Current exceeded
Fault bE High Pressure Cutout - Cprsr C :	CMR	- HP too high
Fault bF High Pressure Cutout - Cprsr D :	CMR	- HP too high
Fault C5 Low Chilled Water Temp (Unit Off) :	IFW	- Antifreeze protection
Fault C6 Low Chilled Water Temp (Unit On) :	MAR	- Antifreeze protection
Fault CA Contactor - Cprsr A :	MMR	- Welded compressor contactor
Fault Cb Contactor - Cprsr B :	MMR	- Welded compressor contactor
Fault CC Contactor - Cprsr C :	MMR -	Welded compressor contactor
Fault Cd Contactor - Cprsr D :	MMR	- Welded compressor contactor
Fault d7 Over Voltage :	MAR	- Voltage 10% > nominal
Fault d8 Under Voltage :	MAR	- Voltage 10% < nominal
Fault Ed Chilled Water Flow Interlock :	MAR	- Flow switch open more than 6 sec.
Fault F5 High Pressure Cutout - Cprsr A :	MMR	- HP too high
Fault F6 High Pressure Cutout - Cprsr B :	MMR -	- HP too high
Fault Fd Emergency Stop Input :	MMR	- Emergency stop input open

Diagnostics

Default description

Displayed Code	Type	Description
Fault 180 Starter Transition - Cprsr A :	CMR	1) Transition proof signal not received 2) Proof input shunted
Fault 181 Starter Transition - Cprsr B :	CMR	1) Transition proof signal not received 2) Proof input shunted
Fault 182 Starter Transition - Cprsr C :	CMR	1) Transition proof signal not received 2) Proof input shunted
Fault 183 Starter Transition - Cprsr D :	CMR	1) Transition proof signal not received 2) Proof input shunted
Fault 184 Phase Reversal - Cprsr A :	CMR	- Phase reversed
Fault 185 : Phase reversal - Cprsr B	CMR	- Phase reversed
Fault 186 Phase reversal - Cprsr C :	CMR	- Phase reversed
Fault 187 Phase reversal - Cprsr D :	CMR	- Phase reversed
Fault 190 Low Superheat - Ckt 1 :	CMR	- Superheat < 1°C during more than 1333°C x sec
Fault 191 Low Superheat - Ckt 2 :	CMR	- Superheat < 1°C during more than 1333°C x sec
Fault 194 Low Evap Rfgt Temp. - Ckt 1 :	CMR	- Refrigerant temperature < Setpoint during more than 30°C x sec
Fault 195 Low Evap Rfgt Temp. - Ckt 2 :	CMR	- Refrigerant temperature < Setpoint during more than 30°C x sec
Fault 198 Low Oil Flow - Cprsr A :	CMR	- Oil flow switch open during more than 20 sec
Fault 199 Low Oil Flow - Cprsr B :	CMR	- Oil flow switch open during more than 20 sec
Fault 19A low Oil Flow - Cprsr C :	CMR	- Oil flow switch open during more than 20 sec
Fault 19b Low Oil Flow - Cprsr D :	CMR	- Oil flow switch open during more than 20 sec
Fault 19C Phase Loss - Cprsr A :	CMR	- Loss of 1 or more phases
Fault 19d Phase Loss - Cprsr B :	CMR	- Loss of 1 or more phases
Fault 19E Phase Loss - Cprsr C :	CMR	- Loss of 1 or more phases
Fault 19F Phase Loss - Cprsr D :	CMR	- Loss of 1 or more phases
Fault 1A0 Power Loss - Cprsr A :	CAR	- Loss of all three phases in operation
Fault 1A1 Power Loss - Cprsr B :	CAR -	Loss of all three phases in operation
Fault 1A2 Power Loss - Cprsr C :	CAR	- Loss of all three phases in operation
Fault 1A3 Power Loss - Cprsr D :	CAR	- Loss of all three phases in operation
Fault 1A4 Tracer Communication Loss :	IFW	- Loss of external information
Fault 1A5 Oil Flow Control - Cprsr A :	CMR	- Problem on oil circuit
Fault 1A6 Oil Flow Control - Cprsr B :	CMR	- Problem on oil circuit
Fault 1A7 Oil Flow Control - Cprsr C :	CMR	- Problem on oil circuit
Fault 1A8 Oil Flow Control - Cprsr D :	CMR	- Problem on oil circuit
Fault 1A9 EXV Elec Drtive Ckt - Rfgt Ckt 1 :	CMR	1) EXV wiring 2) Defective UCM 3) Defective EXV 4) Defective EXV relay

Diagnostics

Default description

Displayed Code	Type	Description
Fault 1AA EXV Elec Drtive Ckt - Rfgt Ckt 2 :	CMR	1) EXV wiring 2) Defective UCM 3) Defective EXV 4) Defective EXV relay
Fault 1Ad Memory Error Type I :	IFW	- NOVRAM problem, unit is placed on default setting operating
Fault 1AE Low Differential Pressure - Ckt 1 :	CMR	- Delta P< 2,8bar during more than 2 min.
Fault 1AF Low Differential pressure - Ckt 2 :	CMR	- Delta P< 2,8bar during more than 2 min.
Fault 1b2 Severe Phase Unbalance - Cprsr A :	CMR	- Phase imbalance >30%, check current transformer and unit power supply
Fault 1b3 Severe Phase Unbalance - Cprsr B :	CMR	- Phase imbalance >30%, check current transformer and unit power supply
Fault 1b4 Severe Phase Unbalance - Cprsr C :	CMR	- Phase imbalance >30%, check current transformer and unit power supply
Fault 1b5 Severe Phase Unbalance - Cprsr D :	CMR	- Phase imbalance >30%, check current transformer and unit power supply
Fault 1b6 Compressor Overload Setting - Cprsr A :	IFW	- Check setting of compressor overload
Fault 1b7 Compressor Overload Setting - Cprsr B :	IFW	- Check setting of compressor overload
Fault 1b8 Compressor Overload Setting - Cprsr C :	IFW	- Check setting of compressor overload
Fault 1b9 Compressor Overload Setting - Cprsr D :	IFW	- Check setting of compressor overload
Fault 1bA Phase Unbalance - Cprsr A :	CMR	- Phase imbalance >15%
Fault 1bb Phase Unbalance - Cprsr B :	CMR	- Phase imbalance >15%
Fault 1bC Phase Unbalance - Cprsr C :	CMR	- Phase imbalance >15%
Fault 1bd Phase Unbalance - Cprsr D :	CMR	- Phase imbalance >15%
Fault 1bE Winding Temp - Cprsr A :	CMR	- Winding temperature > 105°C
Fault 1bF Winding Temp - Cprsr B :	CMR	- Winding temperature > 105°C
Fault 1C0 Winding Temp - Cprsr C :	CMR	- Winding temperature > 105°C
Fault 1C1 Winding Temp - Cprsr D :	CMR	- Winding temperature > 105°C
Fault 1C6 High Differential Pressure - Ckt 1 :	CMR	- LB/HP pressure differential > 24,5 bar
Fault 1C7 High Differential Pressure - Ckt 2 :	CMR	- LB/HP pressure differential > 24,5 bar
Fault 1d1 Memory Error Type II :	IFW	- RAM error
Fault 1d2 Memory Error Type III :	IFW	- RAM error
Fault 1d3 Cprsr Suction Temp Sensor - Ckt 1 :	CMR	- Defective sensor
Fault 1d4 Cprsr Suction Temp Sensor - Ckt 2 :	CMR	- Defective sensor
Fault 1d7 Phase Reversal Prot Lost - Cprsr A :	CMR	- Phase reversal protection not operative
Fault 1d8 Phase Reversal Prot Lost - Cprsr B :	CMR	- Phase reversal protection not operative
Fault 1d9 Phase Reversal Prot Lost - Cprsr C :	CMR	- Phase reversal protection not operative
Fault 1dA Phase Reversal Prot Lost - Cprsr D :	CMR	- Phase reversal protection not operative
Fault 1db Slaved EXV Elec Drive Ckt - Rfgt Ckt 1 :	CMR	- EXV electric drive defective
Fault 1dC Slaved EXV Elec Drive Ckt - Rfgt Ckt 2 :	CMR	- EXV electric drive defective
Fault 1dd High Oil Temp - Cprsr A :	CMR	- Oil temperature > 77°C
Fault 1dE High Oil Temp - Cprsr B :	CMR	- Oil temperature > 77°C
Fault 1dF High Oil Temp - Cprsr C :	CMR	- Oil temperature > 77°C

Diagnostics

Default description

Displayed Code	Type	Description
Fault 1E0 High Oil Temp - Cprsr D :	CMR	- Oil temperature > 77°C
Fault 1E1 Oil System Fault - Cprsr A :	CMR	- Oil temperature < condenser saturated temperature during more than 30 min
Fault 1E2 Oil System Fault - Cprsr B :	CMR	- Oil temperature < condenser saturated temperature during more than 30 min
Fault 1E3 Oil System Fault - Cprsr C :	CMR	- Oil temperature < condenser saturated temperature during more than 30 min
Fault 1E4 Oil System Fault - Cprsr D :	CMR	- Oil temperature < condenser saturated temperature during more than 30 min
Fault 1E5 Entering Oil Temp Sensor - Cprsr A :	CMR	- Defective sensor
Fault 1E6 Entering Oil Temp Sensor - Cprsr B :	CMR	- Defective sensor
Fault 1E7 Entering Oil Temp Sensor - Cprsr C :	CMR	- Defective sensor
Fault 1E8 Entering Oil Temp Sensor - Cprsr D :	CMR	- Defective sensor
Fault 2A1 Cond Fan Vari Speed Drive Fault - Ckt 1 :	IFW	- Defective fan variator speed after 5 attemps
Fault 2A2 Cond Fan Vari Speed Drive Fault - Ckt 2 :	IFW	- Defective fan variator speed after 5 attemps

Note :

MMR : Machine shutdown manual reset.

MAR : Machine shutdown automatic reset.

CMR : Circuit shutdown manual reset.

CAR : Circuit shutdown automatic reset.

IFW : Informational warning.

Diagnostics

Communication Failures

Displayed Code	Description
Fault 410	Loss of Local Display Panel Comm
Fault 412	Chiller Mod to Option Mod Comm Failure
Fault 413	Chiller Mod to EXV Mod Comm Failure
Fault 414	Chiller Mod to Cprsr A Mod Comm Failure
Fault 415	Chiller Mod to Cprsr B Mod Comm Failure
Fault 416	Chiller Mod Cprsr C Mod Comm Failure
Fault 417	Chiller Mod to Cprsr D Mod Comm Failure
Fault 418	Chiller Mod to Slv EXV Mod Comm Failure
Fault 431	EXV Mod to Chiller Mod Comm Failure
Fault 434	EXV Mod to Cprsr A Mod Comm Failure
Fault 435	EXV Mod to Cprsr B Mod Comm Failure
Fault 436	EXV Mod to Cprsr C Mod Comm Failure
Fault 437	EXV Mod to Cprsr D Mod Comm Failure
Fault 441	Cprsr A Mod to Chiller Mod Comm Failure
Fault 443	Cprsr A Mod to EXV Mod Comm Failure
Fault 445	Cprsr A Mod to Cprsr B Mod Comm Failure
Fault 451	Cprsr B Mod to chiller Mod Comm Failure
Fault 453	Cprsr B Mod to EXV Mod Comm Failure
Fault 454	Cprsr B Mod to Cprsr A Mod Comm Failure
Fault 461	Cprsr C Mod to Chiller Mod Comm Failure
Fault 463	Cprsr C Mod to EXV Mod Comm Failure
Fault 467	Cprsr C Mod to Cprsr D Mod Comm Failure
Fault 471	Cprsr D Mod to Chiller Mod Comm Failure
Fault 473	Cprsr D Mod to EXV Mod Comm Failure
Fault 476	Cprsr D Mod to Cprsr C Mod Comm Failure
Fault 481	Slv EXV Mod to Chiller Mod Comm Failure
Fault 483	Slv EXV Mod to EXV Mod Comm Failure
Fault 484	Slv EXV Mod to Cprsr A Mod Comm Failure
Fault 485	Slv EXV Mod to Cprsr B Mod Comm Failure
Fault 486	Slv EXV Mod to Cprsr C Mod Comm Failure
Fault 487	Slv EXV Mod to Cprsr D Mod Comm Failure

Controller for Free Cooling/ Heat Recovery Application

The aim of this section is to list available screens on the additional controller used to control Free Cooling /Heat Recovery application (version 1.0). The built-in control terminal features:

- An LCD display (1), 4 lines x 20 characters with back lighting
- 6 buttons (2) to (7)

User interface

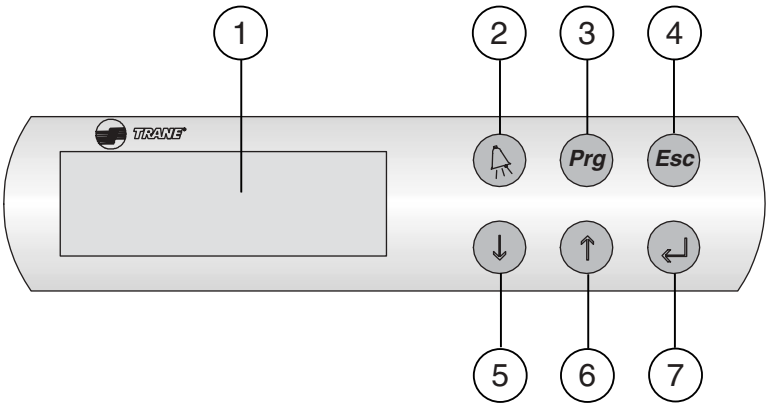

2 = **Alarm button**: Used for displaying or manually resetting the alarms. The red LED lights up, when at least one alarm has been detected.

3 = **Program button**: Allows the various operating parameters to be set (safety parameters, thresholds).

4 = **Escape button**: Allows the return to default display

5, 6 = **Downward and Upward arrows: Allow** management of currently displayed screen and setting of values of control parameters

7 = **Validation button** Allows to move from line to line in the currently displayed screen and to confirm the set data.

Note: In addition to the mask definition, the setting range (within parentheses or **bold** for discrete data) and the default value (**underlined**) of each parameter are indicated.

Free Cooling Application

Free Cooling Application

Permanent display

Access to this mask using the ***Esc*** key from any mask. The program will return automatically into it after 5 min.

```
① FC Application          V1.0
②    00/00/00             00:00
③ Lvg Wat Temp:           00.0°C
④ Free Cooling
```

1 = Application name and version number
2 = Current date and time
3 = Leaving water temperature
4 = Unit status:

"Chiller Low Ambient"	Chiller stopped by low ambient temperature
"FC Low Ambient"	Free Cooling stopped by low ambient temperature
"Chiller"	Chiller is running
"Chiller, wait => FC"	Chiller is switching to Free Cooling
"Chiller => FC"	Free Cooling is switching to Chiller
"Free Cooling"	Free Cooling is running
"FC, wait => Chiller"	Free Cooling is waiting for the end of timer to switch to Chiller
"FC => Chiller"	Chiller is waiting for the end of timer to switch to Free Cooling
"Chiller, PLC Failure"	Chiller is enabled, PLC (Programmable Logic Controller) is in alarm mode
"PLC Failure"	Chiller is not enabled, PLC is in alarm mode
"Stopped"	System is OFF

Access to Sub-menus

Access to this mask using the ***Prg*** key. The sub-menu will be selected using the ***Up*** and ***Down*** keys and selected using the ***Enter*** button.

```
① Data Display
② Settings
③ Clock
④ Configuration
```

1 = Data display menu
2 = Settings menu
3 = Clock menu
4 = Unit configuration menu

Free Cooling Application

Data display menu

The following mask will be accessed using the ***Up*** and ***Down*** keys

Analog Inputs

①	Ent Wat Temp:	00.0°C
②	Lvg Wat Temp:	00.0°C
③	Ambient Temp:	00.0°C
④	Active SP:	00.0°C

1 = Entering water temperature
2 = Leaving water temperature
3 = Ambient air temperature
4 = Active chilled water setpoint

Setpoint Source

① Setpoint Source
Front Panel

② Active SP: 00.0°C

1 = Setpoint Source (Front Panel, External, Air Reset, Return Water Reset)
2 = Active chilled water setpoint

"Front Panel"	Setpoints come from local source
"External"	Setpoints come from external source
"Air Reset"	Setpoints adjusted according to readings from air temperature sensor
"Return Water Reset"	Setpoints adjusted according to readings from return water temperature sensor

Free Cooling Application

Digital Inputs

① System: On NNSB: On

② UCM Pump: Required
③ Flow Switch: OK
④ Free Cooling: Enable

1 = System (Off, On); NNSB (Off, On)
2 = UCM Pump (Not Req., Required)
3 = Flow Switch (OK, Not OK)
4 = Free Cooling (Disable, Enable)

Digital Outputs

	1	2	3	② Speed
① FAN:	Off	Off	Off	Low
FFC:	UCM	Pmp	FS	Relay
On	Off	On	Off	Off
③	④	⑤	⑥	⑦

1 = Fans 1, 2 and 3 (Off, On)
2 = Fan Speed (Low, High)
3 = FC status (Off, On)
4 = UCM enabled (Off, On)
5 = System Pump (Off, On)
6 = Flow Switch (Off, On)
7 = PRG Relay (Off, On)

Free Cooling Application

3 Way Valve IO

3 Way Valve

① Input: 000.0% (00.0V)

② Output: 000.0% (00.0V)

1 = 3WV Input Position (Value and Input Analog Voltage)
2 = 3WV Output Position (Value and Output Analog Voltage)

Chilled Water Setpoint IO

① External CWSP
In: 00.0°C (00.0V)

② Setpoint Report
Out: 00.0°C (00.0V)

1 = External Chilled Water Setpoint (Value and Input Analog Voltage)
2 = Adjusted Water Setpoint Output (Value and Output Analog Voltage)

Settings Menu

Access to each field within a mask using the ***Enter*** key. Change the field value using the ***Up*** and ***Down*** keys and confirmation by ***Enter***.

① User Password
0000

1 = Access via password, 0000 to 9999

User Settings

① Lvg Water SP: 07.0°C
② Delta Temp SP: 05.0°C
③ Pump OFF Delay: 01 mn
④ PRG Relay: PLC Fault

1 = Leaving Water Temp SP (-17.8°C (or LAW+2.8°C)..15°C (or HCWSP): **7°C**)
2 = Chiller Delta Temp SP (2°C..10°C: **5°C**)
3 = Pump OFF Delay Timer (0..30min: **1min**)
4 = Programmable Relay Function (PLC ON, **PLC Fault**, FC ON)

Free Cooling Application

Chilled Water Reset CWR

```
① CWR: None
② Ratio: 025%
③ Start: 10.0°C
④ Max: 02.7°C
```

1 = Reset Type (**None**, External, Based on OAT, Based on Ret Wat)

"None"	No reset has been requested
"External"	Reset comes from external source
"Based on OAT"	Reset is based on outdoor air temperature
"Based on Ret Wat"	Reset is based on return water temperature

2 = Ratio (-80%..120%: **25%**)
3 = Start Temperature (-15.5°C..54.4°C: **10°C**)
4 = Maximum CWR (0°C..11.1°C: **2.7°C**)

Clock Menu

```
  User Password
①
  0000
```

1 = Access via password, 0000 to 9999

Clock Settings

```
  Clock
     ① Mon

② Hour   00:00
③ Date   00/00/00
```

1 = Weekday (**Mon**, Tue, Wed, Thu, Fri, Sat or Sun)
2 = Time setting
3 = Date setting (dd/mm/yy)

Free Cooling Application

Alarm Messages - Free Cooling Application

Alarm Screen	History Events Record	Reset Type	Unit status	Description
No Alarm	No Alarm	-	Free Cooling ON Chiller ON	See unit status on Main display
Alarm LWT Sensor	Faulty LWT Sensor	Auto	Free Cooling OFF Chiller ON	Faulty sensor, out of range -38..+ 60°C during + 30s
Alarm EWT Sensor	Faulty EWT Sensor	Auto	Free Cooling OFF Chiller ON	Faulty sensor, out of range -38..+ 60°C during + 30s
Alarm OAT Sensor	Faulty OAT Sensor	Auto	Free Cooling OFF Chiller ON	Faulty sensor, out of range -38..+ 60°C during + 30s
Alarm Flow Switch	Flow Switch	Auto	Free Cooling OFF Chiller OFF	No water flow during 6s
Alarm Low LWT or EWT	Low LWT or EWT	Auto	Free Cooling OFF Chiller OFF	LWT or EWT below LAW for more than 16.6°C*s
Alarm Int (LWT-EWT) >120°C*s	LWT > EWT during +120s	Manual	Free Cooling OFF Chiller OFF	LWT-EWT above 120°C*s
Alarm 3WV Position Diff In vs Out > 10%	3WV Delta In vs Out	Manual	Free Cooling OFF Chiller OFF	Diff between 3WV In and Out > 10% for more than 2*Valve StrokeTime

Heat Recovery Application

Permanent display

Access to this mask using the Esc key from any mask. The program will return automatically into it after 5min.

① HR Application	V1.0
② 00/00/00	00:00
③ Hot Wat Temp:	00.0°C
④ Cool&HR Mode	Running

1 = Application name and version number
2 = Current date and time
3 = Hot water temperature
4 = Unit status:

"Cool Mode Running"	Chiller is running in Cool Mode
"Cool&HR Mode Running"	Chiller is running in Cool and Heat Recovery Mode
"Cool&HR Mode Stopped"	Chiller is stopped in Cool and Heat Recovery Mode
"Cool Mode Stopped"	Chiller is stopped in Cool Mode
"HR is Starting"	Heat Recovery is starting
"HR is Stopping"	Heat Recovery is stopping
"Alarm"	Chiller is stopped by Alarm

Heat Recovery Application

Access to Sub-menus

Access to this mask using the Prg key. The sub-menu will be selected using the Up and Down keys and selected using the Enter button.

① Data Display
② Settings
③ Clock
④ Configuration

1 = Data display menu
2 = Settings menu
3 = Clock menu
4 = Unit configuration menu

Data display menu

The following mask will be accessed using the Up and Down keys

Analog Inputs

①	Hot Water Temp:	00.0°C
②	C1 pressure:	00.0b
③	C2 pressure:	00.0b
④	Active HWSP:	00.0°C

1 = Customer return hot water temperature
2 = Circuit 1 pressure
3 = Circuit 2 pressure
4 = Active hot water setpoint

Heat Recovery Application

Digital Inputs

①	Circuit 1:	Running
②	Circuit 2:	Running
③	HR Status:	Enabled
④	NNSB:	Off

1 = Circuit 1 (Stopped, Running)
2 = Circuit 2 (Stopped, Running)
3 = Heat Recovery Status (Disabled, Enabled)
4 = Night Noise Set Back (Off, On)

Digital Outputs

		1	2	3	CKT
①	FAN1:	Off	Off	Off	On
②	FAN2:	Off	Off	Off	On
③	PRG Relay:	On			

1 = Circuit 1 Fans stages (Off, On)
2 = Circuit 2 Fans stages (Off, On)
3 = Programmable Relay (Off, On)

Circuit 1 Enable Output (Off, On)
Circuit 2 Enable Output (Off, On)

Analog Outputs

①	3WV:	000.0% (00.0V)
②	DV1:	000.0% (00.0V)
③	DV2:	000.0% (00.0V)

1 = 3-Way valve Output (Value and Output Analog Voltage)
2 = C1 Speed Inverter Output (Value and Output Analog Voltage)
3 = C2 Speed Inverter Output (Value and Output Analog Voltage)

Heat Recovery Application

Settings Menu

Access to each field within a mask using the Enter key. Change the field value using the Up and Down keys and confirmation by Enter.

```
  User Password
① 
  0000
```

1 = Access via password, 0000 to 9999

User Settings

```
① Hot Water SP:    50°C

② PRG Relay:       HR ON
```

1 = Hot Water Temp SP (40..60°C: **50°C**)
2 = Programmable Relay Function (PLC ON, PLC Fault, **HR ON**)

Clock Menu

```
  User Password
① 
  0000
```

1 = Access via password, 0000 to 9999

Clock Settings

```
  Clock
     ① Mon

② Hour   00:00
③ Date   00/00/00
```

1 = Weekday (**Mon**, Tue, Wed, Thu, Fri, Sat or Sun)
2 = Time setting
3 = Date setting (dd/mm/yy)

Heat Recovery Application

Alarms Messages - Heat Recovery Application

Alarm Screen	History Events Record	Reset Type	Unit status	Description
No Alarm	No Alarm	-	Heat Recovery ON Chiller ON	See unit status on Main display
Alarm HWT Sensor	Faulty HWT Sensor	Auto	Heat Recovery OFF Chiller ON	Faulty sensor, out of range -38..+ 85°C during + 30s
Alarm PRS1 Sensor	Faulty PRS1 Sensor	Auto	Heat Recovery ON Circuit 1 OFF	Faulty sensor, out of range -0.5..+ 30 bars during + 15s
Alarm PRS2 Sensor	Faulty PRS2 Sensor	Auto	Heat Recovery ON Circuit 2 OFF	Faulty sensor, out of range -0.5..+ 30 bars during + 15s

Notes

Quality Management
System Approval

Literature Order Number	RLC-SVU02C-E4
Date	0106
Supersedes	RLC-SVU02B-E4_0805
Literature Stocking Location	Europe

Trane has a policy of continuous product and product data improvement and reserves the right to change design and specifications without notice. Only qualified technicians should perform the installation and servicing of equipment referred to in this publication.

www.trane.com

For more information, contact your local sales office or e-mail us at comfort@trane.com

American Standard Europe BVBA
Registered Office: 1789 Chaussée de Wavre, 1160 Brussels - Belgium