Библиотека СОК

SANYO

INSTRUCTION MANUAL

MDF-U7486S
MDF-U7486SC
MDF-U5486S
MDF-U5486SC

Ultra-Low Temperature Freezer

MDF-U7486S

CONTENTS

INTRODUCTION	P. 2
PRECAUTIONS FOR SAFE OPERATION	P. 3
ENVIRONMENTAL CONDITIONS	P. 7
FREEZER COMPONENTS	P. 8
Control panel	P.10
INSTALLATION SITE	P.11
INSTALLATION	P.12
START-UP OF UNIT	P.13
CHAMBER TEMERATURE SETTING	P.14
KEY LOCK FUNCTION	P.14
ALARM TEMPERATURE SETTING	P.15
SETTING OF ALARM RESUME TIME	P.16
REMOTE ALARM TERMINAL	P.17
AIR INTAKE PORT	P.17
CHANGE OF COMPRESSOR DELAY TIME	P.18
ALARMS & SAFETY FUNCTIONS	P.19
ROUTINE MAINTENANCE	
Cleaning of cabinet	P.20
Cleaning of condenser filter	P.20
Defrosting of inside wall	P.21
Cleaning of air intake port	P.22
TROUBLESHOOTING	P.23
DISPOSAL OF UNIT	P.24
Recycle of battery	P.24
DISPOSAL OF BATTERY	P.25
BACK-UP SYSTEM (OPTION)	P.26
TEMPERATURE RECORDER (OPTION)	P.27
Installation of MTR-G85	P.27
INTERFACE BOARD (OPTION)	P.27
Installation of MTR-480/MTR-L03	P.27
INVENTORY RACK (OPTION)	P.28
SPECIFICATIONS (MDF-U5486S/SC)	P.29
SPECIFICATIONS (MDF-U7486S/SC)	P.30
PERFORMANCE	P.31
SAFETY CHECK SHEET	P.32

INTRODUCTION

■ Read this manual carefully before using the appliance and follow the instructions for safety operation.

■ Sanyo never guarantee any safety if the appliance is used for any objects other than intended use or used by any procedures other than those mentioned in this manual.

■ Keep this manual in an adequate place to refer to it as necessary.

■ The contents of the manual will be subjected to change without notice due to the improvement of performance or functions.

■ Contact Sanyo sales representative or agent if any page of the manual is lost or page order is incorrect.

■ Contact Sanyo sales representative or agent if any point in this manual is unclear or if there are any inaccuracies.

■ No part of this manual may be reproduced in any form without the expressed written permission of Sanyo.

⚠CAUTION

SANYO guarantees the product under certain warranty conditions. SANYO in no way shall be responsible for any loss of content or damage of content.

PRECAUTIONS FOR SAFE OPERATION

It is imperative that the user complies with this manual as it contains important safety advice.

Items and procedures are described so that you can use this unit correctly and safely. If the precautions advised are followed, this will prevent possible injury to the user and any other person.

Precautions are illustrated in the following way:

⚠WARNING

Failure to observe WARNING signs could result in a hazard to personnel possibly resulting in serious injury or death.

⚠CAUTION

Failure to observe CAUTION signs could result in injury to personnel and damage to the unit and associated property.

Symbol shows;

△ this symbol means caution.

⃠ this symbol means an action is prohibited.

● this symbol means an instruction must be followed.

Be sure to keep this manual in a place accessible to users of this unit.

Some warning and/or caution labels are attached on the unit. Following shows the description of such labels.

⚡	This label is on the cover in which the electrical components of high voltage are enclosed to prevent the electric shock. The cover should be removed by a qualified engineer or a service personnel only.
⚠	This symbol means attention or refer to document.
⏚	This symbol means earth.
I	This symbol means power switch “ON”.
O	This symbol means power switch “OFF”.

⚠WARNING

As with any equipment that uses CO_2 gas, there is a likelihood of oxygen depletion in the vicinity of the equipment. It is important that you assess the work site to ensure there is suitable and sufficient ventilation. If restricted ventilation is suspected, then other methods of ensuring a safe environment must be considered. These may include atmosphere monitoring and warning devices.

PRECAUTIONS FOR SAFE OPERATION

⚠WARNING

Do not use the unit outdoors. Current leakage or electric shock may result if the unit is exposed to rain water.

Only qualified engineers or service personnel should install the unit. The installation by unqualified personnel may cause electric shock or fire.

Install the unit on a sturdy floor and take an adequate precaution to prevent the unit from turning over. If the floor is not strong enough or the installation site is not adequate, this may result in injury from the unit falling or tipping over.

Never install the unit in a humid place or a place where it is likely to be splashed by water. Deterioration of the insulation may result which could cause current leakage or electric shock.

Never install the unit in a flammable or volatile location. This may cause explosion or fire.

Never install the unit where acid or corrosive gases are present as current leakage or electric shock may result due to corrosion.

Always ground (earth) the unit to prevent electric shock. If the power supply outlet is not grounded, it will be necessary to install a ground by qualified engineers.

Never ground the unit through a gas pipe, water main, telephone line or lightning rod. Such grounding may cause electric shock in the case of an incomplete circuit.

Connect the unit to a power source as indicated on the rating label attached to the unit. Use of any other voltage or frequency other than that on the rating label may cause fire or electric shock.

Never store volatile or flammable substances in this unit if the container cannot be sealed. These may cause explosion or fire.

Do not insert metal objects such as a pin or a wire into any vent, gap or any outlet on the unit. This may cause electric shock or injury by accidental contact with moving parts.

Use this unit in safe area when treating the poison, harmful or radiate articles. Improper use may cause bad effect on your health or environment.

Turn off the power switch (if provided) and disconnect the power supply to the unit prior to any repair or maintenance of the unit in order to prevent electric shock or injury.

Do not touch any electrical parts (such as power supply plug) or operate switches with a wet hand. This may cause electric shock.

PRECAUTIONS FOR SAFE OPERATION

⚠WARNING

Ensure you do not inhale or consume medication or aerosols from around the unit at the time of maintenance. These may be harmful to your health.

Never splash water directly onto the unit as this may cause electric shock or short circuit.

Never put containers with liquid on the unit as this may cause electric shock or short circuit when the liquid is spilled.

Never bind, process, or step on the power supply cord, or never damage or break the power supply plug. A broken supply cord or plug may cause fire or electric shock.

Do not use the supply cord if its plug is loose. Such supply cord may cause fire or electric shock.

Never disassemble, repair, or modify the unit yourself. Any such work carried out by an unauthorized person may result in fire, or electric shock or injury due to a malfunction.

Disconnect the power supply plug if there is something wrong with the unit. Continued abnormal operation may cause electric shock or fire.

When removing the plug from the power supply outlet, grip the power supply plug, not the cord. Pulling the cord may result in electric shock or fire by short circuit.

Disconnect the power supply plug before moving the unit. Take care not to damage the power cord. A damaged cord may cause electric shock or fire.

Disconnect the power plug when the unit is not used for long periods. Keeping the connection may cause electric shock, current leakage, or fire due to the deterioration of insulation.

If the unit is to be stored unused in an unsupervised area for an extended period, **ensure that children do not have access and that doors cannot be closed completely.**

The disposal of the unit should be accomplished by appropriate personnel. Remove doors to prevent accidents such as suffocation.

Do not put the packing plastic bag within reach of children as suffocation may result.

PRECAUTIONS FOR SAFE OPERATION

⚠CAUTION

Use a dedicated power source (a dedicated circuit with a breaker) as indicated on the rating label attached to the unit.　A branched circuit may cause fire resulting from abnormal heating.

Connect the power supply plug to the power source firmly after removing the dust on the plug. A dusty plug or improper insertion may cause a heat or ignition.

Never store corrosive substances such as acid or alkali in this unit if the container cannot be sealed.　These may cause corrosion of inner components or electric parts.

Check the setting when starting up of operation after power failure or turning off of power switch.　The stored items may be damaged due to the change of setting.

Be careful not to tip over the unit during movement to prevent damage or injury.

Prepare a safety check sheet when you request any repair or maintenance for the safety of service personnel.

ENVIRONMENTAL CONDITIONS

This equipment is designed to be safe at least under the following conditions (based on the IEC 61010-1):

■ Indoor use;

■ Altitude up to 2000 m;

■ Ambient temperature 5°C to 40°C

■ Maximum relative humidity 80% for temperature up to 31°C decreasing linearly to 50% relative humidity at 40°C;

■ Mains supply voltage fluctuations not to exceed ±10% of the nominal voltage;

■ Other supply voltage fluctuations as stated by the manufacturer;

■ Transient overvoltages according to Installation Categories (Overvoltage Categories) II; For mains supply the minimum and normal category is II;

■ Pollution degree 2 in accordance with IEC 60664.

FREEZER COMPONENTS

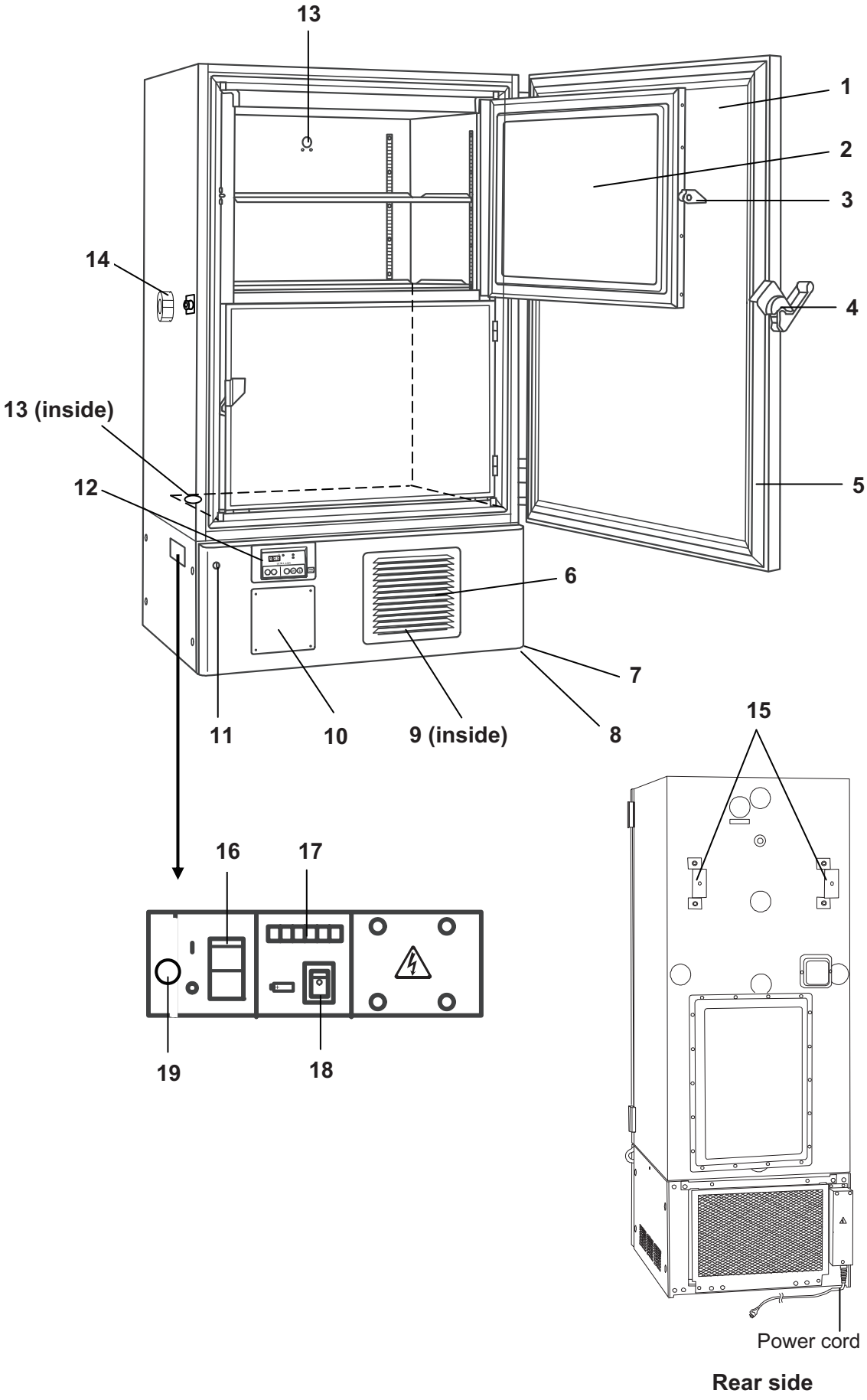

FREEZER COMPONENTS

1. Outer door: To open the outer door, grip the handle. On closing, lock the outer door latch completely.

2. Inner door: The operation of the inner door should be quick to minimize the temperature rise in chamber. Lock the inner door latch completely when the inner door is closed. The inner door is removable for cleaning or defrosting. See page 21 “Routine maintenance”.

3. Inner door latch: Always lock the inner door latch when the inner door is closed.

4. Outer door latch: Always lock the latch when the outer door is closed.

5. Magnetic door gasket: This provides a tight door seal and prevents cold air leak. Keep clean.

6. Air intake vent (grille): Do not block this vent to keep the proper cooling performance.

7. Caster: 4 casters are provided to facilitate moving of the cabinet. For the installation, adjust the leveling foot so that the front 2 casters cannot contact with the floor.

8. Leveling foot: These are screw bolts used to install and fix the unit. Adjust the height of the leveling feet by turning the screw bolts until 2 front casters are away from the floor.

9. Condenser filter (behind the grille): This filter prevents the dust from accumulating on the condenser. The dusty filter may cause failure of refrigerating device. Clean the filter once a month. See page 20 “Routine maintenance” for the cleaning.

10. Space for temperature recorder: A temperature recorder (optional component) can be attached here. See page 27 “Temperature recorder”.

11. Lock: Turn clockwise to 180° with a key and the outer door is securely locked.

12. Control panel: Used for temperature setting and indication of operating status is displayed on the panel. See page 10 for details.

13. Access port (rear and bottom): This is used for leading a cable and sensor of a measuring equipment, or nozzle of back-up system to chamber.

14. Air intake port: After closing the outer door, if used to open soon. See page 17

15. Fixture (on back side): 2 fixtures serve as spacers between the cabinet and wall and also serve as hooks to fix the unit. See page 12 “Installation”.

16. Power switch: This is for turning ON/OFF the power to the unit. ON – “I” OFF – “O”

17. Remote alarm terminal: This is used to notice an alarm condition of the unit to remote location. Refer to page 17 “Remote alarm terminal”.

18. Battery switch: This is a switch for a battery for power failure alarm. Normally, turn on this switch. Be sure to turn off this switch if the freezer is not in operating for the long period.

19. Fuse: 125 V, 3.15 A. Normal blow type.

FREEZER COMPONENTS

Control panel

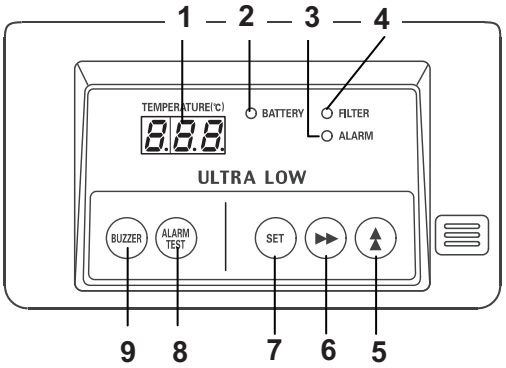

1. Digital temperature indicator: This indicator shows the present chamber temperature or set temperature.

2. Battery check lamp (BATTERY): This lamp flickers to recommend the battery replacement. For the replacement, consult Sanyo sales representative or agent.

3. Alarm lamp (ALARM): This lamp is flashed during alarm condition.

4. Filter lamp (FILTER): This lamp lights when the excessive dust is accumulated on the condenser filter. When this lamp lights, clean the condenser filter following the procedure on page 20.

5. Numerical value shift key (▲): Pressing this key in the setting mode causes the numerical value to shift. “ON-OFF” of key lock can be selected by pressing this key in the key lock mode. By pressing this key for more than 5 seconds in the temperature display mode leads setting mode for alarm temperature, alarm resume time ,compressor delay time and door alarm delay time. Refer to page 15 and 16 for details respectively.

6. Digit shift key (▶▶): Pressing this key in the setting mode causes the changeable digit to shift. Key lock is available by pressing this key for more than 5 seconds in the temperature display mode. Refer to page 14 for details.

7. Set key (SET): Temperature set mode is led by pressing this key and the changeable digit is flashed. By pressing this key again, the setting is memorized. The set mode returns to the temperature display mode automatically when 90 seconds has passed without any key operation. Refer to page 14 for details.

8. Alarm test key (ALARM TEST): To check the alarm system. Pressing this key with the battery switch ON gets the alarm lamp to flash, the remote alarm to operate, and the buzzer to sound.

9. Alarm buzzer stop key (BUZZER): To silence the audible alarm under alarm condition, press this key. The buzzer during alarm test cannot be silenced by this key.

INSTALLATION SITE

To operate this unit properly and to obtain maximum performance, install the unit in a location with the following conditions:

■ A location not subjected to direct sunlight

Do not install the unit under direct sunlight. Installation in a location subjected to direct sunlight cannot obtain the intended performance.

■ A location with adequate ventilation

Leave at least 10 cm around the unit for ventilation. Poor ventilation will result in a reduction of the performance and consequently the failure.

■ A location away from heat generating sources

Avoid installing the unit near heat-emitting appliances such as a heater or a boiler etc. Heat can decrease the intended performance of the unit.

■ A location with little temperature change

Install the unit under stable ambient temperature. The allowable ambient temperature is between +5 and +30°C.

■ A location with a sturdy and level floor

Always install the unit on a sturdy and level floor. The uneven floor or tilted installation may cause failure or injury. Install the unit in stable condition to avoid the vibration or noise. Unstable condition may cause vibration or noise.

⚠ WARNING

Install the unit on a sturdy floor. If the floor is not strong enough or the installation site is not adequate, this may result in injury from the unit falling or tipping over.

Select a level and sturdy floor for installation. This precaution will prevent the unit from tipping. Improper installation may result in water spillage or injury from the unit tipping over.

■ A location not prone to high humidity

Install the unit in the ambient of 80% R.H. or less humidity. Installation under high humidity may cause current leakage or electric shock.

⚠ WARNING

Do not use the unit outdoors. Current leakage or electric shock may result if the unit is exposed to rain water.

Never install the unit in a humid place or a place where it is likely to be splashed by water. Deterioration of the insulation may result which could cause current leakage or electric shock.

■ A location without flammable or corrosive gas

Never install the unit in a flammable or volatile location. This may cause explosion or fire or may result in the current leakage or electric shock by the corrosion of the electrical components.

■ A location without the possibility of anything fall

Avoid installing the unit in the location where anything can fall down onto the unit. This may cause the breakdown or failure of the unit.

INSTALLATION

1. Remove the packaging materials and tapes

Remove all transportation packaging materials and tapes. Open the doors and ventilate the unit. If the outside panels are dirty, clean them with a diluted neutral dishwashing detergent. (Undiluted detergent can damage the plastic components. For the dilution, refer to the instruction of the detergent.) After the cleaning with the diluted detergent, always wipe it off with a wet cloth. Then wipe off the panels with a dry cloth.

2. Adjust the leveling foot

Extend the leveling feet by rotating them counterclockwise to contact them to the floor. Ensure the unit is level. (Fig.1)

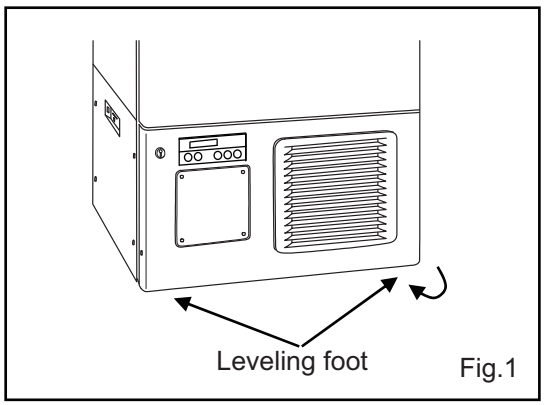

Fig.1

3. Fix the unit

Two fixtures are attached to the rear of the frame. Fix the frame to the wall with these fixtures and rope or chain. (Fig.2)

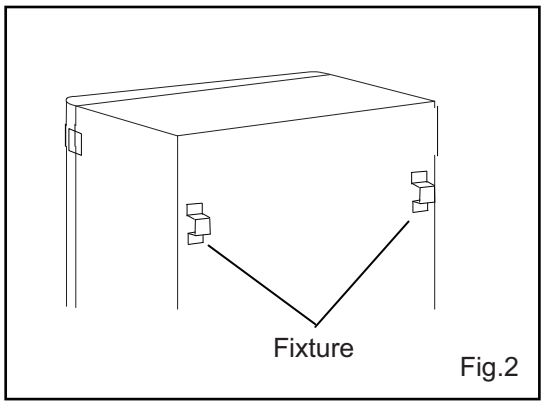

Fig.2

⚠WARNING

Use a power supply outlet with ground (earth) to prevent electric shock. If the power supply outlet is not grounded, it is necessary to install a ground by qualified engineers.

Never ground the unit through a gas pipe, water main, telephone line or lightning rod. Such grounding may cause electric shock in the case of an incomplete circuit.

START-UP OF UNIT

Follow the procedures for the initial and consequent operations of the unit.

1. Turn off the switch of the back-up system (optional component) if it is installed.

2. Connect the power supply cord to the dedicated outlet having appropriate rating with the chamber empty, and turn on the power switch on the freezer.

3. Turn on the battery switch.

4. Set the desired chamber temperature. See page 14 for the temperature setting.

5. Check that the chamber temperature reaches the desired temperature.

6. Turn on the switch of back-up system (optional component) if it is installed.

7. Make sure that the alarm lamp blinks and the buzzer sounds by pressing the alarm test key (ALARM TEST). The remote alarm is also operated. E09 is displayed on the digital temperature indicator if the battery switch is OFF. Make sure to turn on the battery switch.

8. After confirming the above, you can put articles into the freezer chamber in a small batch to prevent the temperature rise.

9. An alarm function is to work normally, or push and confirm an alarm test key (the condition that a battery switch is on). It is normal if alarm lamp blinking, remote alarm operation and a buzzer ring.

Operation after power failure

The set value is memorized by nonvolatile memory. Accordingly, the freezer resumes the operation with setting before power failure.

When the freezer is recovered from power failure with the chamber temperature higher than the preset temperature, then the high temperature alarm is activated and the buzzer sounds and the remote alarm is also activated. Please push the buzzer stop key (BUZZER) to silence buzzer and take appropriate actions if needed.

CHAMBER TEMPERATURE SETTING

Table 1 shows the basic procedure for setting the chamber temperature. Perform key operations in the sequence indicated in the table. The example in the table is based on the assumption that the desired temperature is -75°C.

Note: The unit is set at the factory that the chamber temperature -80°C.

Table 1. Basic operation sequence (Example: Chamber temperature -75°C)

	Description of operation	Key operated	Indication after operation
1	Turn the power switch ON.	----	The current chamber temperature is displayed. 20
2	Press set key.	SET	The second digit is flashed. -80
3	Set to -75 with the numerical value shift key and digit shift key.	▲	When pressed, the figure of settable digit changes.
		▶▶	When pressed, the settable digit is shifted. -75
4	Press set key.	SET	Set temperature is memorized and the current chamber temperature is displayed. 20

Note:

• The temperature set mode returns to the temperature display mode automatically when 90 seconds has passed without any key operation.

• Although the value of the chamber temperature setting can range from -50°C to -90°C, the guaranteed temperature when there is no load is -85°C when the ambient temperature is 30°C.

• The set mode returns to the temperature display mode automatically when 90 seconds has passed without any key operation. In this case, any setting before pressing set key (SET) is not memorized.

KEY LOCK FUNCTION

This unit is provided with the key lock function. When the key lock is ON, change of temperature setting through the key pad is not available. The key lock is set in OFF at the factory.

Display	Mode	Function
L 0	Key lock is OFF	Enable to change of temperature setting
L 1	Key lock is ON	Disable to change of temperature setting

Table 2. Procedure for key lock setting (change from key lock OFF to key lock ON)

	Description of operation	Key operated	Indication after operation
1		----	The current chamber temperature is displayed. -80
2	Press digit shift key for 5 seconds.	▶▶	The first digit is flashed. L 0
3	Press numerical value shift key and scroll the figure to 1.	▲	When pressed, the figure of settable digit changes. L 1
4	Press set key.	SET	The key lock is set to ON. The current chamber temperature is displayed. -80

• The set mode returns to the temperature display mode automatically when 90 seconds has passed without any key operation. In this case, any setting before pressing set key (SET) is not memorized.

ALARM TEMPERATURE SETTING

This unit is provided with the high and low temperature alarm and the temperature at which the alarm is activated is changeable.
The following procedure shows the setting of alarm temperature according to the condition below:

High temperature alarm: activates at the temperature 5°C higher than the set temperature
Low temperature alarm: activates at the temperature 5°C lower than the set temperature

Note:
The alarm temperature is set at the factory 10°C higher and lower than the set temperature.
The available range of alarm temperature is between 5°C and 40°C higher or lower than the set temperature.

Table 3. Procedure for setting high temperature alarm

	Description of operation	Key operated	Indication after operation
1		----	The current chamber temperature is displayed. -80
2	Press numerical value shift key for about 5 seconds.	▲▲	The first digit is flashed. F00
3	Press numerical value shift key and scroll the figure to 1.	▲▲	The first digit is flashed. F01
4	Press set key.	SET	The first digit is flashed. 010
5	Scroll the figure to 005 by using digit shift key and numerical value shift key.	▲▲	When pressed, the figure of settable digit changes.
		▶▶	When pressed, the changeable digit moves. 005
6	Press set key.	SET	Alarm temperature is memorized and the current chamber temperature is displayed. -80

Table 4. Procedure for setting low temperature alarm

	Description of operation	Key operated	Indication after operation
1		----	The current chamber temperature is displayed. -80
2	Press numerical value shift key for about 5 seconds.	▲▲	The first digit is flashed. F00
3	Press numerical value shift key and scroll the figure to 2.	▲▲	The first digit is flashed. F02
4	Press set key.	SET	The first digit is flashed. 010
5	Scroll the figure to -05 by using digit shift key and numerical value shift key.	▲▲	When pressed, the figure of settable digit changes.
		▶▶	When pressed, the changeable digit moves. -05
6	Press set key.	SET	Alarm temperature is memorized and the current chamber temperature is displayed. -80

• The set mode returns to the temperature display mode automatically when 90 seconds has passed without any key operation. In this case, any setting before pressing set key (SET) is not memorized.

SETTING OF ALARM RESUME TIME

The alarm buzzer is silenced by pressing alarm buzzer stop key (BUZZER) on the control panel during alarm condition. (A remote alarm is continuing the operation.)
The buzzer will be activated again after certain suspension if the alarm condition is continued. The suspension time can be set by following the procedure shown in the Table 5 below.
The example in the table is based on the assumption that the desired duration is 20 minutes.
Note: The duration is set in 30 minutes at the factory.

Table 5. Setting procedure for alarm resuming time (change from 30 minutes to 20 minutes)

	Description of operation	Key operated	Indication after operation
1		----	The current chamber temperature is displayed.
2	Press digit shift key for 5 seconds.	▲	The first digit is flashed.
3	Set the figure to F25 with the digit shift key and numerical value shift key.	▶▶	The settable digit is shifted.
		▲	When pressed, the figure of settable digit changes.
4	Press set key.	SET	The current resume time is displayed. The second digit is flashed.
5	Set the figure to 020 with the numerical value shift key.	▲	When pressed, the figure of settable digit changes.
6	Press set key.	SET	The setting is memorized and the current chamber temperature is displayed.

• The settable alarm resume time is 10, 20, 30, 40, 50, or 60 minutes (The setting is 010, 020, 030, 040, 050, or 060). The buzzer would not reset if the reset time is set in 000.
• It is recommended to set the alarm resume time when the freezer is not under alarm condition. The setting during alarm condition is effective on the next alarm condition.
• The setting cannot be changed during power failure.
• The set mode returns to the temperature display mode automatically when 90 seconds has passed without any key operation. In this case, any setting before pressing set key (SET) is not memorized.

REMOTE ALARM TERMINAL

The terminal of the remote alarm is installed at the lower left side of the unit. The alarm is outputted from this terminal. Contact capacity is DC 30V, 2 A.
Contact output:

	between COM. and N.O.	between COM. and N.C.
At normal	Open	Close
At abnormal	Close	Open

Note:
• The alarm buzzer is silenced by pressing alarm buzzer stop key (BUZZER) on the control panel during alarm condition. (A remote alarm is continuing the operation.)
The buzzer will be activated again after certain suspension if the alarm condition is continued.
• The alarm is actuated when the power supply plug is disconnected from the outlet or the power switch is OFF.

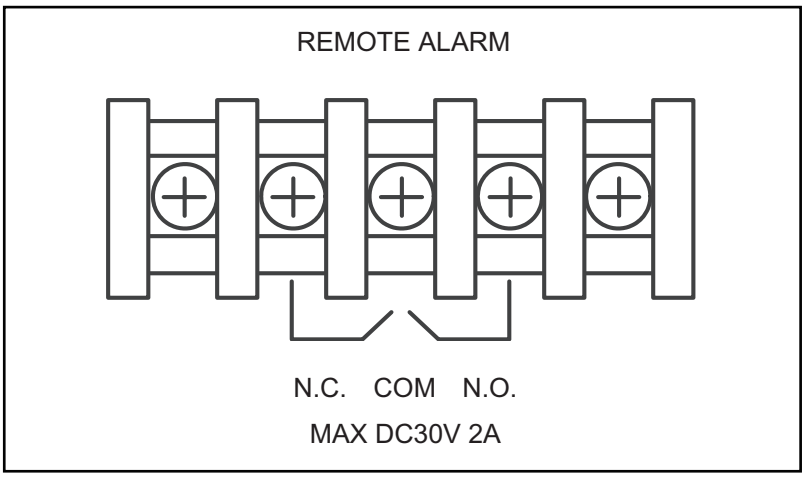

AIR INTAKE PORT

When a door is closed and opened soon, a door does not sometimes open this product.
The warm air which went into the chamber is cooled down rapidly, and this is because air inside the chamber contracted.
When a door is closed and opened soon, a door is easy to open with the following process.

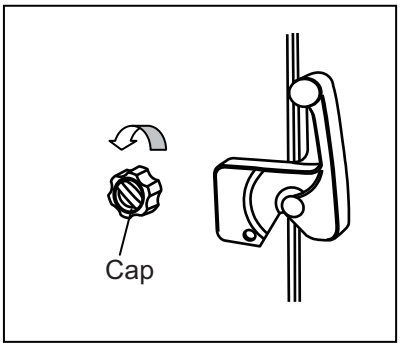

1. Turn the cap of the left side counterclockwise, and remove it.
2. Put the air into the chamber from about ten for twenty seconds, and open a door.
3. Close a cap if a door opens.

A door may not open in the above method when there are frost and ice in the air intake port. In that case, open a cap, and investigate the matter whether there is no frost inside the air intake port. Remove frost inside the air intake port in "the air intake port cleaning stick" of the accessories when there is frost. Clean a air intake port every month even when there is no frost inside the air intake port. Refer to page 22.

⚠ WARNING
For removing the frost of the air intake port, do not use a tool with sharp edge such as a knife or a screw driver.

SETTING OF COMPRESSOR DELAY TIME

The delay time of high and low stage side compressor can be changed to reduce the load on the power line and to facilitate the start-up (reset) of the freezer after power failure.

The example in the table is based on the assumption that the delay time is changed to 4 minutes.
(The delay time is set in 3 minutes at the factory.)

Note:
• The setting range for delay time is between 3 and 15 minutes. The cool down of chamber temperature may be slow when the setting of delay time is over 5 minutes, depending on the installation environment. There is no need of changing the delay time when the capacity of power source is adequate.

Table 6. Setting procedure for delay time (change from 3 minutes to 4 minutes)

	Description of operation	Key operated	Indication after operation
1		----	The current chamber temperature is displayed. -80
2	Press numerical value shift key for 5 seconds.	▲▲	The first digit is flashed. F00
3	Set the figure to F05 with the numerical value shift key.	▲▲	When pressed, the figure of settable digit changes. F05
4	Press set key.	SET	The current delay time is displayed. The first digit is flashed. 003
5	Set the figure to 004 with the numerical value shift key.	▲▲	When pressed, the figure of the first digit changes. 004
6	Press set key.	SET	The delay time is memorized and the current chamber temperature is displayed. -80

• The compressor starts to operate with the delay time set by the above procedure at the time of power on or after power failure. However, the start up of the low stage side compressor is affected by the chamber temperature and the cascade condenser temperature. The delay time varies depending on how they meet the start up conditions.
• The set mode returns to the temperature display mode automatically when 90 seconds has passed without any key operation. In this case, any setting before pressing set key (SET) is not memorized.

ALARMS & SAFETY FUNCTIONS

This unit has the alarms and safety functions shown in Table 7, and also self diagnostic functions.

Table 7. Alarms and safety functions

Alarm	Situation	Indication	Buzzer	Safety functions
High temperature alarm	If the chamber temperature is higher than the temperature at which the high temperature alarm is activated.	Alarm lamp is flashed. Temperature indicator is flashed.	Intermittent tone with 15 minutes delay.	Remote alarm with 15 minutes delay.
Low temperature alarm	If the chamber temperature is lower than the temperature at which the low temperature alarm is activated.			
Power failure alarm	When the power to the unit is disconnected.	Alarm lamp is flashed.	Intermittent tone	Remote alarm.
Filter alarm	When the condenser filter is clogged.	Filter lamp lights.	Intermittent tone	-----
Battery check	When about 3 years has passed with power switch ON.	Battery check lamp lights.	-----	-----
Fan motor check	When about 6 years has passed with power switch ON.	Battery check lamp flashes.	-----	-----
Auto-return	When there is no key pressing in each set mode for 90 seconds.	Chamber temperature is displayed.	-----	Finishing of each set mode.
Key lock	When the key lock is ON.	-----	-----	Change of setting is disable.
Sensor abnormality	If the thermal sensor is disconnected.	Alarm lamp is flashed. E01 and chamber temp. are displayed alternately.	Intermittent tone	Remote alarm. Unit keeps continuous running.
	If the thermal sensor is short-circuited.	Alarm lamp is flashed. E02 and chamber temp. are displayed alternately.	Intermittent tone	Remote alarm. Unit keeps continuous running.
	If the cascade sensor is disconnected.	Alarm lamp is flashed. E03 and chamber temp. are displayed alternately.	Intermittent tone	Remote alarm.
	If the cascade sensor is short circuited.	Alarm lamp is flashed. E04 and chamber temp. are displayed alternately.	Intermittent tone	Remote alarm.
	If the filter sensor is disconnected.	Alarm lamp is flashed. E05 and chamber temp. are displayed alternately.	Intermittent tone	Remote alarm.
	If the filter sensor is short-circuited.	Alarm lamp is flashed. E06 and chamber temp. are displayed alternately.	Intermittent tone	Remote alarm.
	If the ambient temperature sensor is disconnected.	Alarm lamp is flashed. E07 and chamber temp. are displayed alternately.	Intermittent tone	Remote alarm.
	If the ambient temperature sensor is short-circuited.	Alarm lamp is flashed. E08 and chamber temp. are displayed alternately.	Intermittent tone	Remote alarm.
Battery switch check	When the battery switch is OFF during alarm test.	Alarm lamp is flashed. E09 is flashed.	-----	-----
Condenser temp. abnormality	In the event of failure of fan motor for cooling the compressor	E10 and chamber temp. are displayed alternately.	Intermittent tone	Remote alarm. Compressor of high stage side stops.

Note:

• When the operation is started in high ambient temperature, the filter lamp is sometimes flashed. In this case, the lamp is off automatically when the chamber temperature is getting lower.

• The freezer resumes the operation after power failure with the temperature setting before power failure as the chamber temperature setting and alarm temperature setting are memorized in the nonvolatile memory.

• The battery for power failure alarm is an article for consumption. It is recommended that the battery will be replaced about every 3 years. Contact Sanyo sales representative or agent at the time of replacement of the battery for recycling.

• Fan motors are expendable supplies. Replace them for about every 6 years. Contact Sanyo sales representative or agent at the time of replacement of the fan motor.

• The chamber temperature is displayed for 5 seconds by pressing alarm buzzer stop key (BUZZER) during power failure alarm. The alarm lamp keeps flashing.

ROUTINE MAINTENANCE

⚠WARNING

Always disconnect the power supply to the unit prior to any repair or maintenance of the unit in order to prevent electric shock or injury.

Ensure you do not inhale or consume medication or aerosols from around the unit at the time of maintenance. These may be harmful to your health.

Cleaning of cabinet

- Clean the unit once a month. Regular cleaning keeps the unit looking new.
- Use a dry cloth to wipe off small amounts of dirt on the outside and inside of the unit and all accessories. If the outside panels are dirty, clean them with a diluted neutral dishwashing detergent.. (Undiluted detergent can damage the plastic components. For the dilution, refer to the instruction of the detergent.)

After the cleaning with the diluted detergent, always wipe it off with a wet cloth. Then wipe off the cabinet or accessories with a dry cloth.

- Never pour water onto or into the unit. Doing so can damage the electric insulation and cause failure.
- The compressor and other mechanical part are completely sealed. This unit requires absolutely no lubrication.
- Remove the frost or ice on the chamber wall and clean the condenser filter once a month.

Cleaning of condenser filter

This unit is provided with the filter lamp on the control panel. Clean the condenser filter when this lamp lights. Clean the filter once a month even if the lamp is not on since a clogged condenser filter may cause shorter compressor life as well as the poor cooling.

Clean the condenser filter by the procedure below.

1. Open the grille by pulling it to you as shown in the figure.

2. Take out the condenser filter.

3. Wash the condenser filter with water.

4. Replace the condenser filter and the grille.

5. Check that the filter lamp is off in the event the lamp was ON.

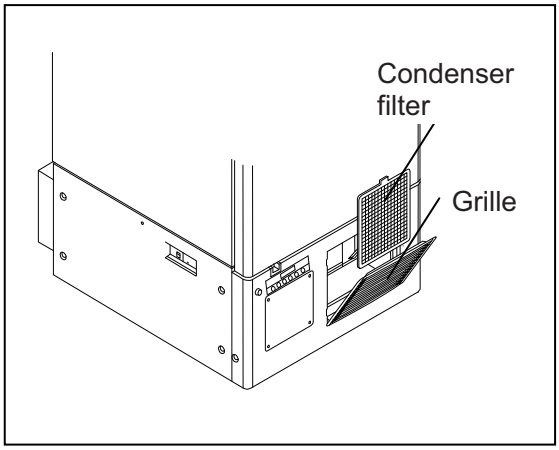

⚠WARNING

Do not touch the condenser directly when the condenser filter is removed for cleaning. This may cause injury by hot surface.

Defrosting of inside wall

The frost is built at the upper portion of the chamber and inner door. The excessive frost possibly make some gap between the cabinet and magnetic door gasket, which may cause poor cooling. Remove the frost on the inner door with a scraper enclosed with the unit. Following shows the procedure for removing the chamber frost.

Note: For removing the frost, do not use a tool with sharp edge such as a knife or a screw driver.

1. Turn off the back-up system if applicable.

2. Take out and transfer all the contents to another freezer or a container which is refrigerated by liquid carbon dioxide or dry ice.

3. Turn off the power switch of the freezer.

4. Open the outer door and inner door. Remove the inner door by lifting up as shown in the figure.

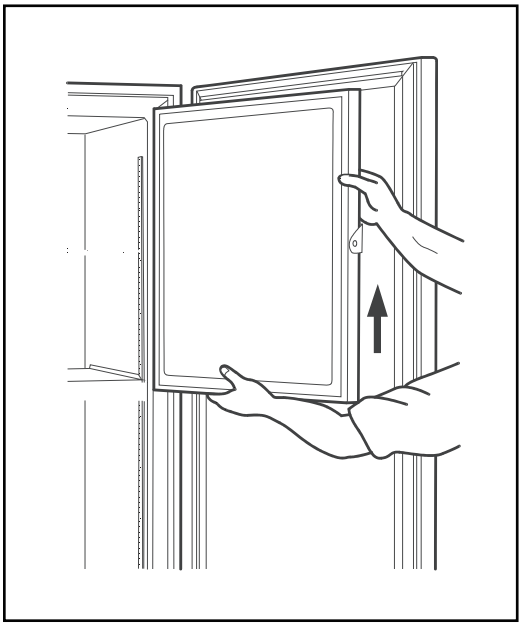

5. Leave the freezer as it is.

6. The water accumulated on the bottom of the chamber should be wiped up with a dry cloth.

7. After cleaning the chamber and inner door, replace the inner door and start up the unit according to the procedure on page 13.

8. Put back the articles into the sufficiently cooled freezer compartment.

9. Turn on the back-up system if it is provided.

Cleaning of air intake port

The cap of the left side is turned counterclockwise (Counterclockwise direction), and this product is removed, and the outer air is adopted into the chamber, and it opens a outer door. Therefore, frost is easy to be settled around the air intake port inside the chamber. Clean it in the case shown below.

Condition	Check / Remedy
When frost and ice can be seen in the port of the air intake port.	The pipe of the air intake port is thrust with a stick for air intake port cleaning of the accessories, and frost is taken.
An outside door does not open even if the cap of the air intake port is opened.	The pipe of the air intake port is thrust with a stick for air intake port cleaning of the accessories, and frost is taken.
Frost and ice can be seen in the chamber.	Frost inside the chamber and ice are taken with Hera of the accessories.

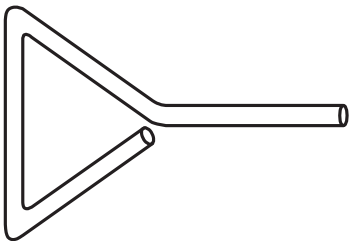

Stick for air intake port cleaning (Accessory)

⚠ WARNING

For removing the frost of the release port, do not use a tool with sharp edge such as a knife or a screw driver.

TROUBLE SHOOTING

If the unit malfunctions, check out the following before calling for service.

Malfunction	Check/Remedy
The chamber is not cooled at all	▪ The circuit breaker of power source is active. ▪ The voltage is too low (In this case, call an electrician). ▪ The power is not supplied. ▪ The breaker is free. ▪ The large amount of articles (load) is stored in the chamber at one time.
The cooling is poor	▪ The ambient temperature is too high. ▪ The latch of inner door is not closed completely. The outer door is not closed firmly. (The frost or ice between the cabinet and door gasket possibly prevents door seal.) ▪ The air intake vent is blocked. ▪ The condenser filter is clogged. Always clean the filter when the filter check lamp is lit. ▪ The door is not shut tightly. ▪ The inner door is not installed correctly. ▪ The set temperature in the controller is not set properly. ▪ The freezer is in the direct sunlight. ▪ There is any heating source near the freezer. ▪ A rubber cap and insulation are not set correctly. ▪ You put too many unfrozen articles into the chamber.
Alarm test key cannot actuate the alarm	▪ The alarm is activated only when the power switch is ON. ▪ When only the buzzer or only the alarm is actuated by the alarm test key, the unactuated part is out of order, and must be replaced.

Note:

If the malfunction is not eliminated after checking the above items, or the malfunction is not shown in the above table, contact Sanyo sales representative or agent.

If the unit malfunctions, check out the following before calling for service.

DISPOSAL OF UNIT

⚠WARNING

If the unit is to be stored unused in an unsupervised area for an extended period **ensure that children do not have access and doors cannot be closed completely.**

The disposal of the unit should be accomplished by appropriate personnel. Always remove doors to prevent accidents such as suffocation.

Recycle of battery

The unit contains a rechargeable battery. The battery is recyclable. At the end of it's useful life, check with you local solid officials option or proper disposal.

∗ Label indication is obliged to comply with Taiwanese battery regulation.

Decontamination of unit

Before disposal of unit, decontaminate the unit yourself.

DISPOSAL OF BATTERY

Location of a nickel-metal-hydride battery

This unit is provided a nickel-metal-hydride battery for the power failure warning device. The battery is located in the electrical box inside the cover on the lower left side. (Fig. 1)

> The high voltage components are enclosed in the electrical box. The cover should be removed by a qualified engineer or a service personnel only to prevent the electric shock.

Disposal of nickel-metal-hydride battery

1. Turn off the power switch and disconnect the power supply plug.

2. As shown in the Fig. 2, remove 6 screws fixing the side cover with a screw driver and remove the side cover.

3. Remove 5 screws fixing the electrical box cover with a screw driver. (Fig. 3)

4. Disconnect the battery connector and remove 2 screws fixing the battery mounting plate. (Fig. 4)

5. Take out the battery.

6. Follow the procedure for recycling or proper disposal.

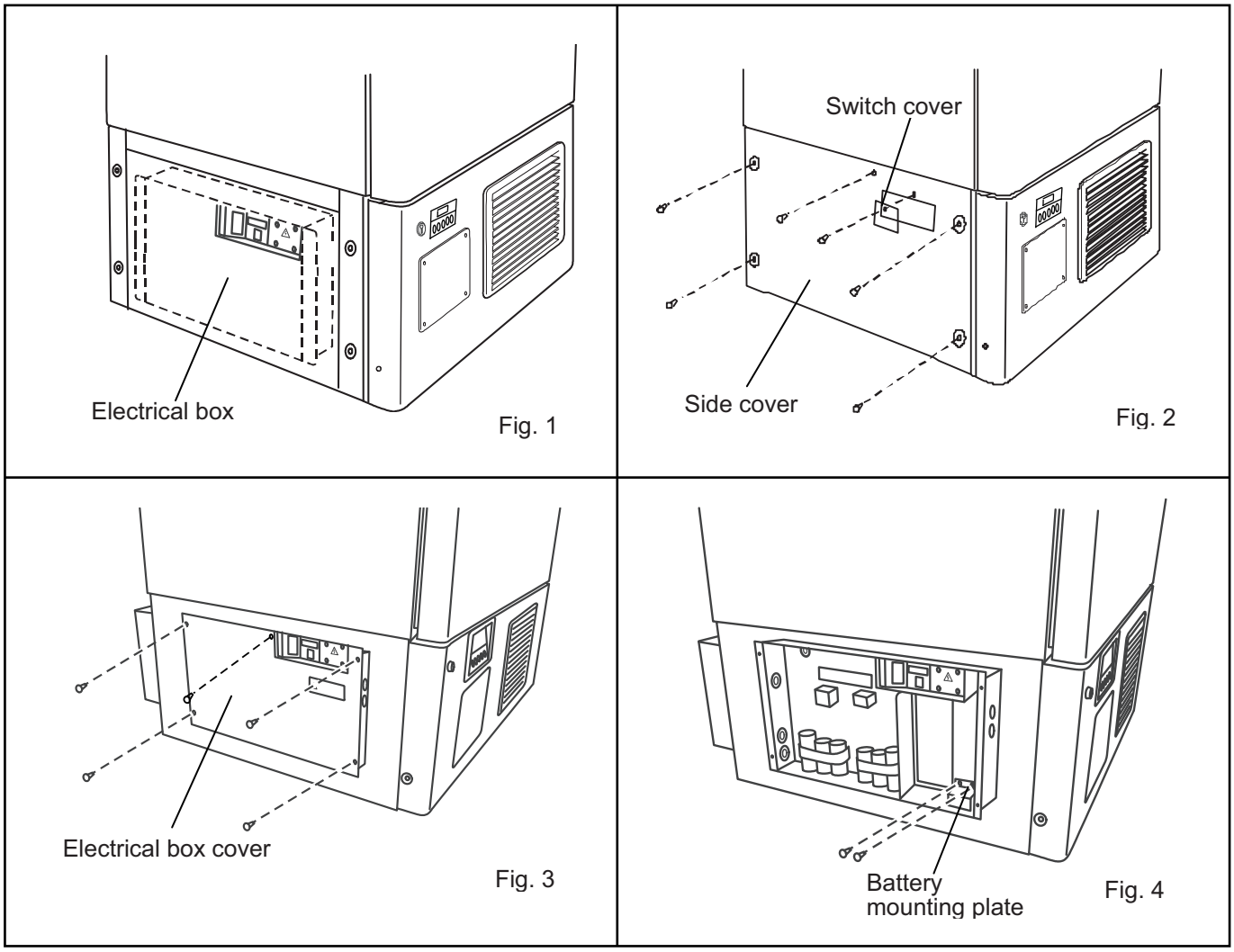

BACK-UP SYSTEM (OPTION)

⚠ WARNING

As with any equipment that uses CO_2 gas, there is a likelihood of oxygen depletion in the vicinity of the equipment. It is important that you assess the work site to endure there is suitable and sufficient ventilation. If restricted ventilation is suspected, then other methods of ensuring a safe environment must be considered. These may include atmosphere monitoring and warning devices.

This freezer can be provided with a back-up system (CVK-UB2) which is available as an optional component. For the installation, refer to the instruction manual enclosed with the system.

1. Switch of back-up system (BACKUP)
When turning on the system, the lamp is brightened. This means that the system is ready. To stop the operation of the system, turn off this switch.

2. Test switch (TEST)
This switch is for checking the operation of back-up system. Pressing this switch is resulted in the release of liquid carbon dioxide without system operation.

3. Temperature setting knob (TEMP. SET)
With this knob, set the temperature at which the system is operated. The effective set temperature range is between -50°C and -70°C.

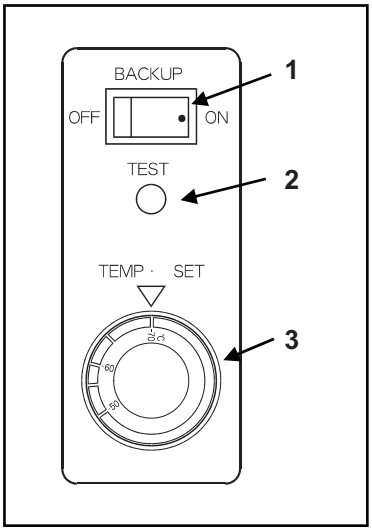

TEMPERATURE RECORDER (OPTION)

Installation of MTR-85H/MTR-G85

Contact Sanyo sales representative or agent for the attachment of an automatic temperature recorder. :

INTERFACE BOARD (OPTION)

Installation of MTR-480/MTR-L03

Contact Sanyo sales representative or agent for the attachment of a interface board. :

Note:

∗ When a data transmitting function to the personal computer is done, an interface board MTR-480 (option goods) and communication cable of 9 pin Dsub cross type for RS232C are necessary.

∗ The connecting cable between the PC and MTR-L03 terminal is not enclosed. Provide a cross type cable of less than 100 m length having a pin plug.

INVENTORY RACK (OPTION)

The optional inventory rack is useful to store the precious materials in the chamber effectively. When the rack is used, it is necessary to adjust the height of the shelves. Set the shelf support as shown in the figure below.

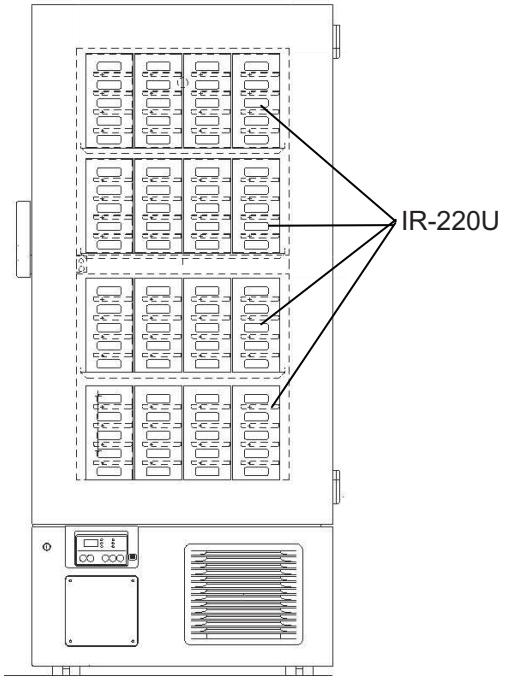

MDF-U5486SC

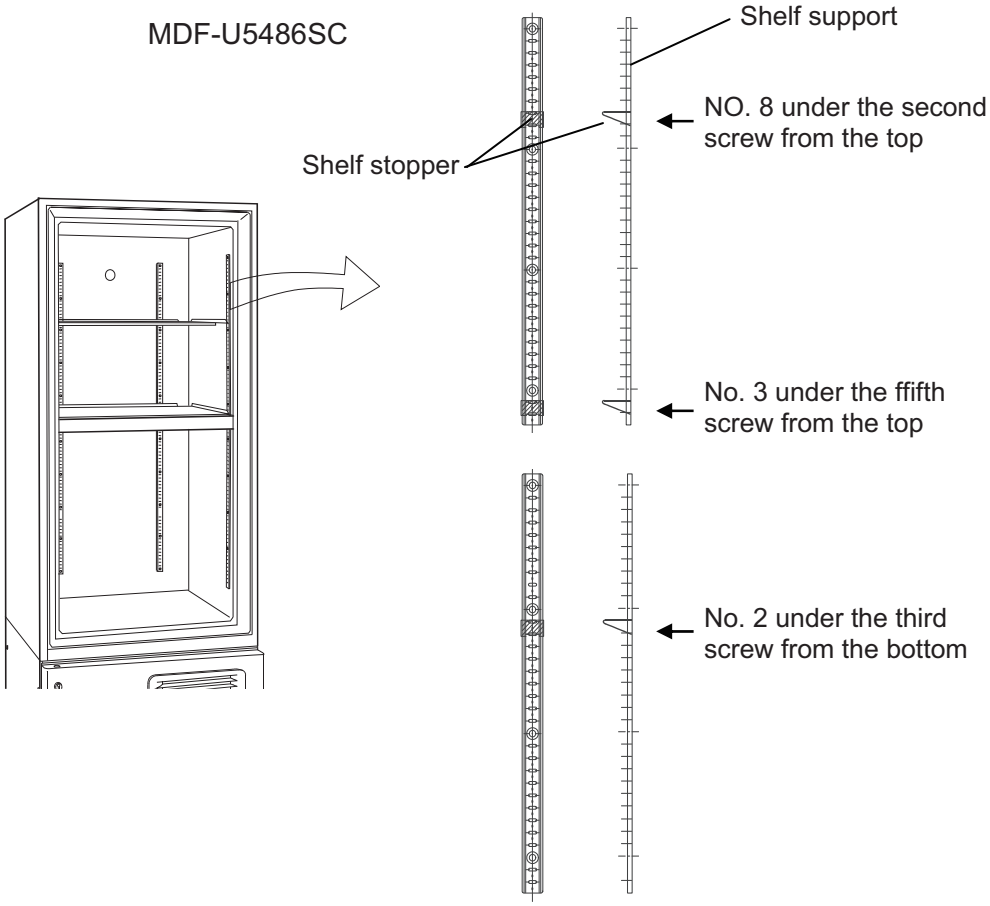

SPECIFICATIONS

Name	Ultra-Low Temperature Freezer	
Model	MDF-U5486S	MDF-U5486SC
External dimensions	W890 x D870 x H1990 (mm)	
Internal dimensions	W630 x D600 x H1280 (mm)	
Effective capacity	483 L	
Exterior	Painted steel	
Interior	Painted steel	
Outer door	Painted steel	
Inner door	ABS resin panel with stainless frame, 2 doors	
Shelf	Stainless steel, 3 shelves (adjustable) W608 x D535 (mm), Load; 50 kg/shelf	
Access port	17 mm diameter, 2 locations (back, bottom left corner)	
Insulation	Rigid polyurethane foamed-in place	
Compressor	Hermetic type, Output; 1100 W (high stage side), 1100 W (low stage side)	
Evaporator	Tube on sheet type	
Condenser	Fin and tube type (high stage side), Shell and tube type (low stage side)	
Refrigerant	R-404A (high stage side), R-508B (low stage side)	
Temperature controller	Microcomputer control system	
Temperature display	Digital display	
Thermal sensor	Platinum resistance (Pt 1000Ω)	
Alarm	High temp. alarm, Low temp. alarm, Power failure alarm Filter check, Battery check, Fan motor check	
Remote alarm contact	Allowable contact capacity: 30 V DC, 2 A	
Battery	Nickel-metal-hydride battery, 6 V DC, 1100 mAh, Auto-recharge	
Accessories	1 set of key, 1 scraper, 1 stick for air intake port cleaning	
Weight	315 kg	320 kg
Voltage booster	None	Built-in
Optional component	Inventory rack (IR-220U) Temperature recorder + Mounting kit (MTR-G85, MTR-85H+MDF-S3085) Back-up system (CVK-UB2): LCO_2 Interface board (MTR-480), LAN interface board (MTR-L03) Data acquisition system (MTR-5000)	

Note:

• Design or specifications will be subject to change without notice.

*: Power source of the automatic temperature recorder shall be 220 V.

SPECIFICATIONS

Name	Ultra-Low Temperature Freezer	
Model	MDF-U7486S	MDF-U7486SC
External dimensions	W1130 x D875 x H1990 (mm)	
Internal dimensions	W870 x D600 x H1280 (mm)	
Effective capacity	668 L	
Exterior	Painted steel	
Interior	Painted steel	
Outer door	Painted steel	
Inner door	ABS resin panel with stainless frame, 2 doors	
Shelf	Stainless steel, 3 shelves (adjustable) W848 x D533 (mm), Load; 50 kg/shelf	
Access port	17 mm diameter, 2 locations (back, bottom left corner)	
Insulation	Rigid polyurethane foamed-in place	
Compressor	Hermetic type, Output; 1100 W (high stage side), 1100 W (low stage side)	
Evaporator	Tube on sheet type	
Condenser	Fin and tube type (high stage side), Shell and tube type (low stage side)	
Refrigerant	R-404A (high stage side), R-508B (low stage side)	
Temperature controller	Microcomputer control system	
Temperature display	Digital display	
Thermal sensor	Platinum resistance (Pt 1000Ω)	
Alarm	High temp. alarm, Low temp. alarm, Power failure alarm Filter check, Battery check, Fan motor check	
Remote alarm contact	Allowable contact capacity: 30 V DC, 2 A	
Battery	Nickel-metal-hydride battery, 6 V DC, 1100 mAh, Auto-recharge	
Accessories	1 set of key, 1 scraper, 1 stick for air intake port cleaning	
Weight	360 kg	365 kg
Voltage booster	None	Built-in
Optional component	Inventory rack (IR-220U) Temperature recorder + Mounting kit (MTR-G85, MTR-85H+MDF-S3085) Back-up system (CVK-UB2): LCO_2 Interface board (MTR-480) , LAN interface board (MTR-L03) Data acquisition system (MTR-5000)	

Note:

• Design or specifications will be subject to change without notice.

*: Power source of the automatic temperature recorder shall be 220 V.

PERFORMANCE

Model	MDF-U5486S MDF-U5486SC (for U.S.A. only)	MDF-U7486S MDF-U7486SC (for U.S.A. only)
Cooling performance	-86°C at the center of the chamber (ambient temperature; 30°C, no load)	
Temperature control range	-50°C to -86°C (ambient temperature; 30°C, no load)	
Power source	220 V, 60 Hz	
Rated power consumption	1180 W	1210 W
Noise level	51 dB [A] (background noise; 20 dB)	
Maximum pressure	2.7 MPa	

Note : The unit with CE mark complies with EC directives 89/336/EEC.

⚠ CAUTION

Please fill in this form before servicing.
Hand over this form to the service engineer to keep for his and your safety.

Safety check sheet

1. Freezer contents : ☐Yes ☐No
   Risk of infection: ☐Yes ☐No
   Risk of toxicity: ☐Yes ☐No
   Risk from radioactive sources: ☐Yes ☐No

   (List all potentially hazardous materials that have been stored in this unit.)
   Notes :

2. Contamination of the unit
   Unit interior ☐Yes ☐No
   No contamination ☐Yes ☐No
   Decontaminated ☐Yes ☐No
   Contaminated ☐Yes ☐No
   Others:

3. Instructions for safe repair/maintenance of the unit
   a) The unit is safe to work on ☐Yes ☐No
   b) There is some danger (see below) ☐Yes ☐No
   Procedure to be adhered to in order to reduce safety risk indicated in b) below.

Date :
Signature :
Address, Division :
Telephone :

Product name:	Model:	Serial number:	Date of installation:
Ultra-low temperature freezer	MDF-		

Please decontaminate the unit yourself before calling the service engineer.

SANYO Electric Co., Ltd
Printed in Japan