Библиотека СОК

CW-5000/ 5200
INDUSTRIAL CHILLER

USER MANUAL

Contents

<1> Cautions ---------- 3

<2> Parts introduction ---------- 4

<3> Installation ---------- 5

<4> Operation and parameters adjustment ---------- 6

<5> Flow alarm and output ports ---------- 10

<6> Specifications ---------- 11

<7> Simple troubleshooting ---------- 13

Thank you for using the machine from GUANGZHOU TEYU ELECTROMECHANICAL CO., LTD. Please read the installation instructions carefully before installing and operating and keep it properly.

This installation instructions is not a quality assurance. GUANGZHOU TEYU ELECTROMECHANICAL CO., LTD. reserves the right to the interpretation of correction of typographical errors, improper mentioned information and product improvement. The amended content will be reprinted in installation instructions without notice in advance.

<1> Cautions

1. Please ensure that the power supply and electrical outlet are in good contact and the earth wire must be firmly grounded!
   Although the average operating current of the chiller is small, but the instantaneous operating current could be up to 6 ~ 10amps sometimes (The instantaneous operating current of models of AC110V power supply are possible to be up to 10 ~ 15amps).
2. Please make sure there is stable and normal voltage for the working chiller!
   As the refrigeration compressor is more sensitive to the power supply and voltage, so the operating voltage of our standard product is of 200 ~ 250V (110V model is of 100 ~130V). If you do need a wider operating voltage range, customization is available for us.
3. Unmatched power frequency can cause the chiller damage!
   Please choose model of 50Hz or 60Hz according to actual circumstance.
4. To protect the pump, it’s strictly forbidden to run the chiller without water in the storage water tank!
   The new machine is packed after draining whole water in the tank, so please make sure the tank has water inside before machine starting, otherwise it’s easily to have the pump damaged. When the water level is below the green (NORMAL) range of the water level gauge, the cooling capacity of our chiller will go down slightly. Hence please ensure the water level is within the green (NORMAL) range. To drain through circulating pump is strictly prohibited!
5. Please be sure that the air inlet and air outlet are in good ventilation!
   There must be at least 30cm from obstructions to the air outlet which is in the back of the cooler, and should leave at least 8cm between obstructions and the side air inlet.
6. The filter screen must be regularly cleaned!
   It’s essential to unpick and wash the dust gauze, or the serious blockage will cause breakdown to the chiller.
7. Please pay attention to the effect of the condensate water!
   With greater ambient humidity, when the water temperature is lower than the ambient temperature, the condensate water will generate on the surface of water circular pipes and the cooled components. If above circumstance appears, it is recommended to set a higher water temperature or keep pipes and cooled parts warm.

8. **Professional use only!**
   The appliance is not to be used by children or persons with reduced physical, sensory or mental capabilities, or lack of experience and knowledge, unless they have been given supervision or instruction, children being supervised not to play with the appliance!

<2> Parts introduction

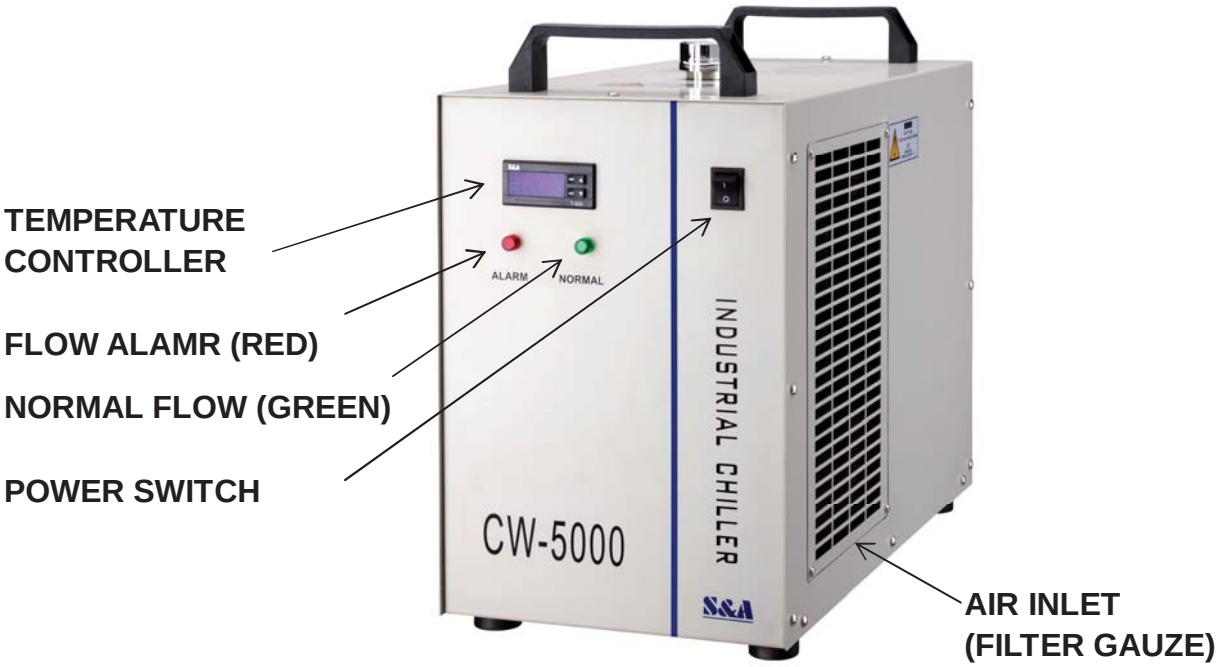

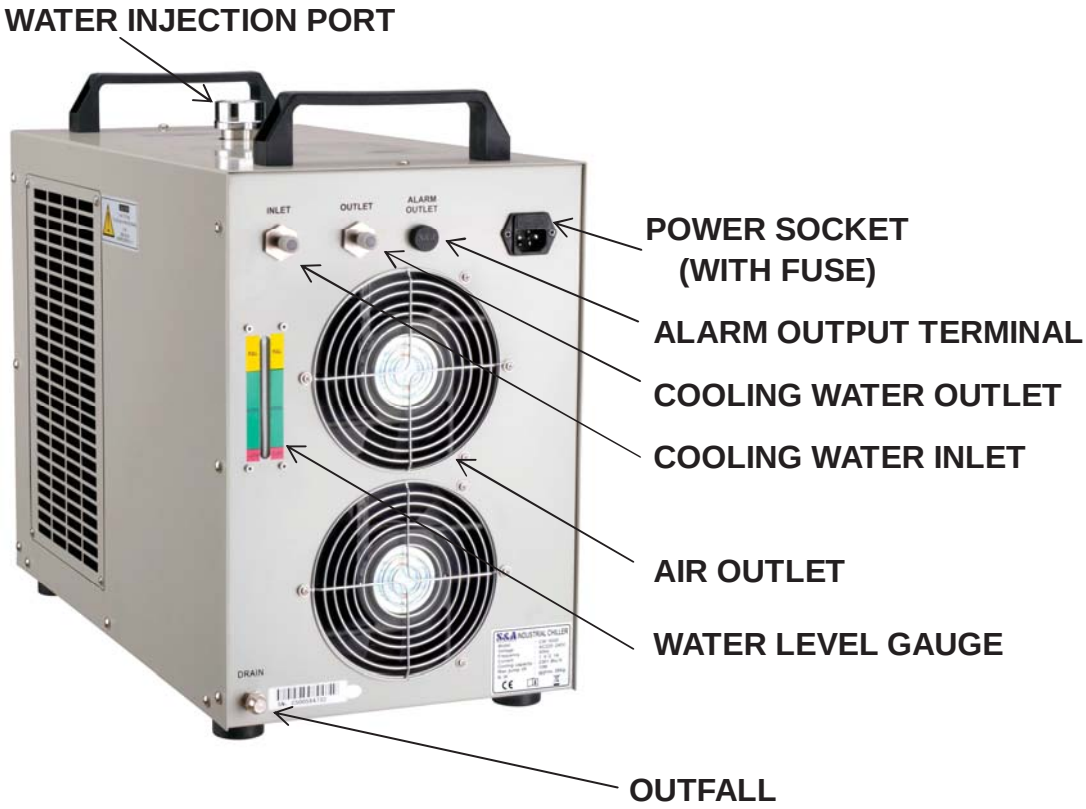

<3> Installation

It is very simple to install this industrial cooling machine. The installation for the first time of the new machine can be carried out by following steps:

1. **Open the package to check if the machine is intact and all the necessary accessories are completed.**
2. **Open the injection port to feed cooling water. (Do not let the water spill over!) Observing the water level gauge and adding water slowly, be careful not to have the water overflowed! For the cooling of carbon steel equipment, the water should be added an appropriate amount of cooling water additive (anti-corrosion water aqua). Working in cold north area, it's better to use noncorrosive antifreeze fluid.**
3. **According to system conditions, please connect the water inlet and outlet pipe well.**
4. **Plug in power, turn on the power switch. (Do not start up without water in the water tank!)**

(1) Power switch turned on, the circulation pump of the chiller starts working. The first time of operating may cause more bubbles in the pipe leading to a flow alarming occasionally, but running for a few minutes later, it will go back to normal.

(2) After the first boot, you must immediately check whether the water pipe leaks.

(3) Power switched on, if the water temperature is below the set value, it is normal that fans and other components of the machine do not work. The temperature controller will automatically control the working conditions of the compressor, magnetic valve, fans and other parts based on the set controlling parameters.

(4) As it takes a longer time to start over the compressor and other components, according to different conditions, the time is range from seconds to minutes, so do not turn off the power and again on frequently.

5. **Check the water level in the water tank.**
   The first startup of the new chiller empties the air in the water pipe, leading a slight water level decline, but in order to keep the water level in the green area, it's allowed to add adequate water again. Please observe and record the current water level, and inspect it again after the chiller running for a period of time, if the water level drops obviously, please re-inspect the water pipeline leakage.
6. **Adjust parameters of temperature controller.**
   CW-5000/5200 series use an intelligent thermostat. Normally users do not need to adjust it. If it is really necessary, please refer to page 6, "Operating status and parameters adjustment."

<4> Operation status and parameters adjustment

The new T503 intelligent temperature controller does not need to adjust the controlling parameters under normal circumstance. It will self-adjust controlling parameters according to room temperature for meeting equipment cooling requirements.

The new T504 intelligent temperature controller is selected constant temperature control mode as factory setting with water temperature at 25℃. User can adjust it as needed.

T503 and T504 controllers are of same functions and structure except factory parameters setting.

1. Temperature controller panel description

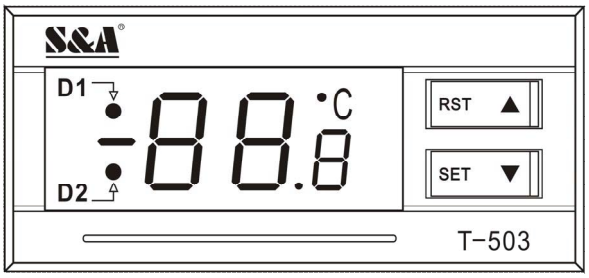

(1). Indicators D1, D2 (as shown) of thermostat working state

D1 ON: thermostat works in intelligent control mode;

D1 OFF: thermostat works in temperature control mode;

D1 FLASHES: thermostat works in parameters setting mode or displays value of room temperature;

D2 ON: chiller works in refrigerating state;

D2 OFF: chiller works in the insulation working state;

D2 FLASHES: chiller works in the energy-saving state;

(2). Press ▼ button will show the room temperature, 6 seconds later to display the restore defaults. (Meanwhile, D1 is flashing, displaying room temperature.)

(3). ▲▼ keys are for adjusting the display status of the controller, parameters selection and adjustment.

(4). RST key: enter key.

(5). SET key: function setting key.

2. Restore to factory settings

Before machine startup, please press and hold ▲▼ button until the controller displays rE, 6 seconds later after releasing the button, the controller works in normal order. Then all parameters settings of the controller have been restored to factory settings.

3. Alarm function

(1) Alarm Display:

E1	E2	E3	E4	E5
Over high room temperature	Over high water temperature	Over low water temperature	Room temperature sensor failure	Water temperature sensor failure

When alarm occurs, the error code and the temperature will be alternately displayed.

(2) To suspend the alarm:

In alarming state, the alarm sound could be suspended by pressing any button, but the alarm display remains until the alarm condition is eliminated.

4. Thermostat parameters list

Order	Code	Item	Range	T-503 Temperature Controller Factory Setting	T-504 Temperature Controller Factory Setting	Note
1	F0	Temperature setting	F9~F8	25	25	Constant temperature control effecting
2	F1	Temperature Difference values	-15~+5	-2	-2	Intelligent control effecting
3	F2	Cooling hysteresis	0.1~3.0	0.8	0.1	
4	F3	Way of control	0~1	1	0	1: intelligent 0: constant temperature
5	F4	Alarm for over high water temperature	1~20	10	10	
6	F5	Alarm for over low water temperature	1~20	15	15	
7	F6	Alarm for over high room temperature	40~50	45	45	
8	F7	Password	00~99	8	8	
9	F8	The allowed highest water temperature	F0~40	30	30	
10	F9	The allowed lowest water temperature	1~F0	20	20	

5. General settings adjustment

Press SET button（SET）to enter into the user-defined state. Meanwhile, D1 flashes to indicate that the controller is in parameters setup status.

(1) Under intelligent mode, the control panel displays the temperature difference value between water and air (F1).

(2) Under constant temperature mode， the control panel displays the set temperature value (F0).

At this moment, press ▲▼ key to change settings. After modifying the value, press the ENTER button (RST) to save and exit, then new parameters take effect, or press SET key (SET) to exit without saving parameters. If there is no more action within 20 seconds, it will automatically exit modifying status without saving parameters.

6. Advanced settings adjustment

(1) Press and hold the ▲ key while press SET button (SET) for 5 seconds until 0 displayed. Then press ▲ button to select the password have been set, and then click the SET button (SET) again, if the password is correct, F0 would be shown, entering the set status, D1 flashing to indicate that the controller is under parameters setup status. What if the password is incorrect, then the panel returns to temperature display.

(2) Enter setup state, press ▲ key to enter and select set items circularly, or press ▼ to go in contrary direction circulation. Select an item, click SET button (SET) to proceed next parameters modifying, original settings being displayed, then press ▲▼ key to modify parameter values, and press SET button (SET) to return to the previous setup menu. Press ENTER button (RST) at any time to exit parameters setup with saving modified parameters and return to temperature display, then the chiller runs under the new parameters. If no button is pressed within 20 seconds, the controller will automatically exit parameters setup without saving the modified parameters.

Note:

1. During parameters setting condition, system still runs under original parameters.
2. Under temperature control mode, the water temperature is controlled by (F0) parameters;
3. Under Intelligent control mode, the water temperature will be automatically adjusted according to temperature changes. The temperature difference is commanded by (F1) parameter.

7. Advanced parameters adjustment case:

Order	Code	Item	Value in case 1	Value in case 2	Value in case 3	T-503 Temperature controller Factory Setting	T-504 Temperature controller Factory Setting
1	F0	Temperature setting		28	25	25	25
2	F1	Temperature Difference values	-3			-2	-2
3	F2	Cooling hysteresis	0.5	2.0	1.0	0.8	0.1
4	F3	Way of control	1	0	0	1	0
5	F4	Alarm for over high water temperature	10	5	4	10	10
6	F5	Alarm for over low water temperature	10	10	14	15	15
7	F6	Alarm for over high Room temperature	45	45	45	45	45
8	F7	Password	8	8	8	8	8
9	F8	The allowed highest water temperature	31	30	30	30	30
10	F9	The allowed lowest water temperature	25	5	5	20	20

(1) Case 1: cooling water temperature is controlled by intelligent mode. Requiring water temperature to be between 25℃ to 31℃. Ambient temperature keeping constant, when the set water temperature is 3℃ lower than the ambient, the fluctuation will not exceed ±0.5℃. There will be an alert when water temperature is 10℃ lower or higher than target. (e.g. when ambient temperature is 30.0℃, cooling water temperature is between 27.5℃ to 26.5℃, if ambient temperature is up to 30.5℃, water temperature will be between 28.0℃ to 27.0℃.)

(2) Case 2: cooling water temperature is controlled by constant mode. Requiring water temperature is constant in 28℃, and the fluctuate does not exceed ±2℃. The alarm of over high water temperature will be on when water temperature is 5℃ higher than normal, and the alarm of over low water temperature will be on when water temperature is 10℃ lower than normal.

(3) Case 3: cooling water temperature is controlled by constant mode. Requiring water temperature is constant in 25℃, and the fluctuate does not exceed ±1℃. The over high water temperature will be on then water temperature is higher than 30℃, and the alarm of over low water temperature will be on when water temperature is lower than 10℃. (No matter what is the ambient temperature, the cooling water temperature is constant in 24.0℃ to 26.0℃)

<5> Flow alarm and output ports

In order to guarantee the equipment will not be damaged while cooling water circulation is out of control, CW-5000/5200series chillers possesses an unique low flow alarm protection.

(1) Flow alarm output ports and the wiring diagram

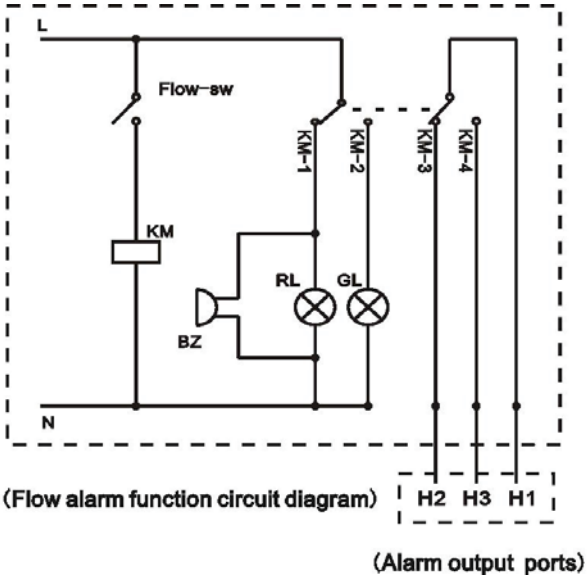

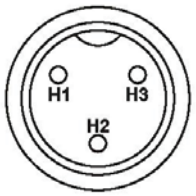

(Output ports diagram)

(2) Flow alarm causes of circulating cooling water and working state

	Normal flow indicator	Flow alarm indicator	Buzzer	Output ports H1, H2	Output ports H1, H3
Circulating pump works properly	ON	OFF	NOT RING	DISCONNECTION	BREAKOVER
Blocked cooling water circulation loop	OFF	ON	RING	BREAKOVER	DISCONNECTION
Alarm of water shortage	OFF	ON	RING	BREAKOVER	DISCONNECTION
Faulted circulating pump	OFF	ON	RING	BREAKOVER	DISCONNECTION
Power interruption				BREAKOVER	DISCONNECTION

Note: The flow alarm is connected to the normally open relay and normally closed relay contacts, requiring operating current less than 5A, working voltage less than 300V.

<6> Specifications

1. CW-5000

Model	CW-5000AG	CW-5000BG	CW-5000DG	CW-5000AI	CW-5000BI	CW-5000DI	CW-5000AK	CW-5000BK	CW-5000DK
Voltage	AC220~240V	AC208~230V	AC100~110V	AC220~240V	AC208~230V	AC100~110V	AC220~240V	AC208~230V	AC100~110V
Frequency	50Hz	60Hz	60Hz	50Hz	60Hz	60Hz	50Hz	60Hz	60Hz
Current	1.4~2.1A		3.5~5.6A	1.4~2.1A		3.5~5.6A	1.4~2.1A		3.5~5.6A
Compressor power	0.295KW	0.38KW	0.305KW	0.295KW	0.38KW	0.305KW	0.295KW	0.38KW	0.305KW
	0.40HP	0.52HP	0.41HP	0.40HP	0.52HP	0.41HP	0.40HP	0.52HP	0.41HP
Refrigeration capacity	2361Btu/h	2999Btu/h	2866Btu/h	2361Btu/h	2999Btu/h	2866Btu/h	2361Btu/h	2999Btu/h	2866Btu/h
	0.692KW	0.879KW	0.84KW	0.692KW	0.879KW	0.84KW	0.692KW	0.879KW	0.84KW
	595Kcal/h	756Kcal/h	722Kcal/h	595Kcal/h	756Kcal/h	722Kcal/h	595Kcal/h	756Kcal/h	722Kcal/h
Refrigerant	R-134a								
Refrigerant charge	300g	320g	280g	300g	320g	280g	300g	320g	280g
Precision	±0.3℃								
Reducer	Capillary								
Protection	Overcurrent protection for compressor, flow alarm, over temperature alarm								
Pump power	0.03KW			0.1KW			0.05KW		
Tank capacity	6 L								
Inlet and outlet	External Ø10mm brass connector						Internal Ø8mm speedy connector		
Max. lift	10M			25M			70M		
Max. flow	10L/min			16L/min			2L/min		
N.W	26Kgs						29Kgs		
G.W	31Kgs						34Kgs		
Dimension	55X28X43 cm (L X W X H)								
Package dimension	72X44X62 cm (L X W X H)								

＊ With heating function is optional.

2. CW-5200

Model	CW-5200AG	CW-5200BG	CW-5200DG	CW-5200AI	CW-5200BI	CW-5200DI	CW-5200AK	CW-5200BK	CW-5200DK
Voltage	AC220~240V	AC208~230V	AC100~110V	AC220~240V	AC208~230V	AC100~110V	AC220~240V	AC208~230V	AC100~110V
Frequency	50Hz	60Hz	60Hz	50Hz	60Hz	60Hz	50Hz	60Hz	60Hz
Current	2.4~3.1A	2.6~3.3A	4.5~6.5A	2.4~3.1A	2.6~3.3A	4.5~6.5A	2.4~3.1A	2.6~3.3A	4.5~6.5A
Compressor power	0.52KW	0.5KW	0.68KW	0.52KW	0.5KW	0.68KW	0.52KW	0.5KW	0.68KW
	0.71HP	0.68HP	0.93HP	0.71HP	0.68HP	0.93HP	0.71HP	0.68HP	0.93HP
Refrigeration capacity	5084Btu/h	4982Btu/h	5186Btu/h	5084Btu/h	4982Btu/h	5186Btu/h	5084Btu/h	4982Btu/h	5186Btu/h
	1.49KW	1.46KW	1.52KW	1.49KW	1.46KW	1.52KW	1.49KW	1.46KW	1.52KW
	1281Kcal/h	1256Kcal/h	1307Kcal/h	1281Kcal/h	1256Kcal/h	1307Kcal/h	1281Kcal/h	1256Kcal/h	1307Kcal/h
Refrigerant	R-22/R-134a/R-410a								
Refrigerant charge	360g	380g	350g	360g	380g	350g	360g	380g	350g
Precision	±0.3℃								
Reducer	Capillary								
Protection	Overcurrent protection for compressor, flow alarm, over temperature alarm								
Pump power	0.03KW			0.1KW			0.05KW		
Tank capacity	6 L								
Inlet and outlet	External Ø10mm brass connector						Internal Ø8mm speedy connector		
Max. lift	10M			25M			70M		
Max. flow	10L/min			16L/min			2L/min		
N.W	30Kgs						33Kgs		
G.W	35Kgs						38Kgs		
Dimension	55X28X43 cm (L X W X H)								
Package dimension	72X44X62 cm (L X W X H)								

＊ With heating function is optional.

<7> Simple troubleshooting

Failure	Failure Cause	Approach
Machine turned on but unelectrified	Power cord is not plugged in place	Check and ensure the power interface and the power plug is plugged in place and in good contact.
	Fuse burnt-out	Pull out the fuse box from the power supply interface of the chiller, check the fuse, replace with spare fuse if necessary and check whether the power supply voltage is stable; Check and ensure the power interface and the power plug is plugged in place and in good contact.
Flow Alarm (panel red light is on)use a water pipe directly connect to the water outlet and inlet but still without water flowing	Water level in the storage water tank is too low	Check the water level gauge display, add water until the level shown in the green area; And check whether water circulation pipe leaks.
	Water circulation pipes are blocked or a pipe bending deformation.	Check water circulation pipe
Ultra-high temperature alarm	Blocked dust gauze, bad thermolysis	Unpick and wash the dust gauze regularly
	Poor ventilation for air outlet and inlet	To ensure a smooth ventilation for air outlet and inlet
	Voltage is extremely low or astable	To improve the power supply circuit or use a voltage regulator
	Improper parameter settings on thermostat	To reset controlling parameters or restore factory settings
	Switch the power frequently	To ensure there is sufficient time for refrigeration (more than 5 minuets)
	Excessive heat load	Reduce the heat load or use other model with larger cooling capacity
Alarm for ultra-high room temperature	The working ambient temperature is too high for the chiller	To improve the ventilation to guarantee that the machine is running under 40℃.
Serious problem of condensate water	Water temperature is much lower than ambient temperature, with high humidity	Increase water temperature or to preserve heat for pipeline
Water drains slowly from outfall during water changing	Injection port is not open	Open the injection port