SERVICE MANUAL

MDV AIRCONDITIONER

SPLIT WALL-MOUNTED TYPE

MS9V1i-07HRN1-QC2; MS9V1i-09HRN1- QC2
MS9V1i-12HRN1-QC2; MS9V1i-18HRN1-QC0

Content

1. Precaution.....1
1.1 Safety Precaution.....1
1.2 Warning.....1
2. Function.....4
3. Dimension.....6
3.1 Indoor unit.....6
3.2 Outdoor unit.....6
4. Refrigerant cycle diagram.....7
5. Operation limits.....8
5.1 Cooling operation.....8
5.2 Heating operation.....8
6. Wiring diagram.....8
6.1 MS9V1i-07HRN1-QC2 8
.....9
6.2 MS9V1i-09HRN1-QC2 , MS9V1i-12HRN1-QC2.....9
Indoor unit:.....9
.....10
Outdoor unit:.....10
6.3 MS9V1i-18HRN1-QC0.....11
Indoor unit:.....11
.....11
Outdoor unit:.....11
.....11
7. Installation details.....12
7.1 Wrench torque sheet for installation.....12
7.2 Connecting the cables.....12
7.3 Pipe length and the elevation.....12
7.4 Air purging of the piping and indoor unit.....13
7.5 Pumping down (Re-installation).....14
7.6 Re-air purging (Re-installation).....15
7.7 Balance refrigerant of the 2-way, 3-way valves.....16
7.8 Evacuation.....17
7.9 Gas charging.....18
8. Capacity table.....19
8.1 MS9V1i-07HRN1-QC2.....19
8.2 MS9V1i-09HRN1-QC2.....19
8.3 MS9V1i-12HRN1-QC2.....20

8.4 MS9V1i-18HRN1-QC0.....21
9. Electronic function.....23
9.1 Proper symbols and their meaning.....23
9.2 Function.....23
9.3 Protection.....23
9.4 Fan-only mode.....23
9.5 Cooling mode.....24
9.6 Dehumidifying mode.....24
9.7 Heating mode.....25
9.8 Defrosting mode (available for heating mode).....26
9.9 Auto mode.....27
9.10 Force cooling function.....28
9.11 Sleep mode.....28
9.12 Auto restart function.....28
9.13 Turbo mode.....28
9.14 PLASMA (optional): 29
9.15 Ionizer (optional).....29
9.15 FP function (optional).....29
10. Troubleshooting.....30
10.1 Display board.....30
10.2 Troubleshooting.....31
10.3 Diagnostic chart.....31
10.4 Resetting phenomenon often occurs during operation. 31
10.5 E3 error display.....32
10.6 E5 or E6 error display.....32
10.7 E1 error display.....32
10.8 E2 error display.....32

1. Precaution

1.1 Safety Precaution

- **To prevent injury to the user or other people and property damage, the following instructions must be followed.**
- **Incorrect operation due to ignoring instruction will cause harm or damage.**
- **Before service unit, be sure to read this service manual at first.**

1.2 Warning

➢ **Installation**

- **Do not use a defective or underrated circuit breaker. Use this appliance on a dedicated circuit.**
  There is risk of fire or electric shock.
- **For electrical work, contact the dealer, seller, a qualified electrician, or an Authorized service center.**
  Do not disassemble or repair the product, there is risk of fire or electric shock.
- **Always ground the product.**
  There is risk of fire or electric shock.
- **Install the panel and the cover of control box securely.**
  There is risk of fire of electric shock.
- **Always install a dedicated circuit and breaker.**
  Improper wiring or installation may cause fore or electric shock.
- **Use the correctly rated breaker of fuse.**
  There is risk of fire or electric shock.
- **Do not modify or extend the power cable.**
  There is risk of fire or electric shock.
- **Do not install, remove, or reinstall the unit by yourself (customer).**
  There is risk of fire, electric shock, explosion, or injury.
- **Be caution when unpacking and installing the product.**
  Sharp edges could cause injury, be especially careful of the case edges and the fins on the condenser and evaporator.
- **For installation, always contact the dealer or an Authorized service center.**
  There is risk of fire, electric shock, explosion, or injury.
- **Do not install the product on a defective installation stand.**
  It may cause injury, accident, or damage to the product.
- **Be sure the installation area does not deteriorate with age.**
  If the base collapses, the air conditioner could fall with it, causing property damage, product failure, and personal injury.
- **Do not let the air conditioner run for a long time when the humidity is very high and a door or a windows is left open.**
  Moisture may condense and wet or damage furniture.
- **Take care to ensure that power cable could not be pulled out or damaged during operation.**
  There is risk of fire or electric shock.
- **Do not place anything on the power cable.**
  There is risk of fire or electric shock.
- **Do not plug or unplug the power supply plug during operation.**
  There is risk of fire or electric shock.
- **Do not touch (operation) the product with wet hands.**
  There is risk of fire or electric shock.
- **Do not place a heater or other appliance near the power cable.**
  There is risk of fire and electric shock.
- **Do not allow water to run into electric parts.**
  It may cause fire, failure of the product, or electric shock.
- **Do not store or use flammable gas or combustible near the product.**
  There is risk of fire or failure of product.
- **Do not use the product in a tightly closed space for a long time.**
  Oxygen deficiency could occur.
- **When flammable gas leaks, turn off the gas and open a window for ventilation before turn the product on.**
  Do not use the telephone or turn switches on or off.
  There is risk of explosion or fire.
- **If strange sounds, or small or smoke comes from product. Turn the breaker off or disconnect the power**

supply cable.

There is risk of electric shock or fire.

- **Stop operation and close the window in storm or hurricane. If possible, remove the product from the window before the hurricane arrives.**

  There is risk of property damage, failure of product, or electric shock.

- **Do not open the inlet grill of the product during operation. (Do not touch the electrostatic filter, if the unit is so equipped.)**

  There is risk of physical injury, electric shock, or product failure.

- **When the product is soaked (flooded or submerged), contact an Authorized service center.**

  There is risk of fire or electric shock.

- **Be caution that water could not enter the product.**

  There is risk of fire, electric shock, or product damage.

- **Ventilate the product from time to time when operating it together with a stove, etc.**

  There is risk of fire or electric shock.

- **Turn the main power off when cleaning or maintaining the product.**

  There is risk of electric shock.

- **When the product is not be used for a long time, disconnect the power supply plug or turn off the breaker.**

  There is risk of product damage or failure, or unintended operation.

- **Take care to ensure that nobody could step on or fall onto the outdoor unit.**

  This could result in personal injury and product damage.

➢ CAUTION

- **Always check for gas (refrigerant) leakage after installation or repair of product.**

  Low refrigerant levels may cause failure of product.

- **Install the drain hose to ensure that water is drained away properly.**

  A bad connection may cause water leakage.

- **Keep level even when installing the product.**

  To avoid vibration of water leakage.

- **Do not install the product where the noise or hot air from the outdoor unit could damage the neighborhoods.**

  It may cause a problem for your neighbors.

- **Use two or more people to lift and transport the product.**

  Avoid personal injury.

- **Do not install the product where it will be exposed to sea wind (salt spray) directly.**

  It may cause corrosion on the product. Corrosion, particularly on the condenser and evaporator fins, could cause product malfunction or inefficient operation.

➢ Operational

- **Do not expose the skin directly to cool air for long periods of time. (Do not sit in the draft).**

  This could harm to your health.

- **Do not use the product for special purposes, such as preserving foods, works of art, etc. It is a consumer air conditioner, not a precision refrigerant system.**

  There is risk of damage or loss of property.

- **Do not block the inlet or outlet of air flow.**

  It may cause product failure.

- **Use a soft cloth to clean. Do not use harsh detergents, solvents, etc.**

  There is risk of fire, electric shock, or damage to the plastic parts of the product.

- **Do not touch the metal parts of the product when removing the air filter. They are very sharp.**

  There is risk of personal injury.

- **Do not step on pr put anything on the product. (outdoor units)**

  There is risk of personal injury and failure of product.

- **Always insert the filter securely. Clean the filter every two weeks or more often if necessary.**

  A dirty filter reduces the efficiency of the air conditioner and could cause product malfunction or damage.

- **Do not insert hands or other object through air inlet or outlet while the product is operated.**

  There are sharp and moving parts that could cause personal injury.

- **Do not drink the water drained from the product.**

  It is not sanitary could cause serious health issues.

- **Use a firm stool or ladder when cleaning or maintaining the product.**

  Be careful and avoid personal injury.

- **Replace the all batteries in the remote control with new ones of the same type. Do not mix old and mew batteries or different types of batteries.**

  There is risk of fire or explosion.

- **Do not recharge or disassemble the batteries. Do not dispose of batteries in a fire.**

  They may burn of explode.

- **If the liquid from the batteries gets onto your skin or clothes, wash it well with clean water. Do not use the remote of the batteries have leaked.**

  The chemical in batteries could cause burns or other health hazards.

2. Function

Indoor unit

Operation ON/OFF by remote controller

Sensing by room temperature

Room temperature sensor.
Pipe temperature sensor.

Room temperature control

Maintain the room temperature in accordance with the setting temperature.

Starting temperature control

Indoor fan is delayed for 5 sec at the starting.

Time Delay Safety control

Restarting is for approx. 3 minutes..

Indoor fan speed control

High, med, low, breeze.

Operation indication Lamps (LED)

Light up in the LED (LCD) for each operation mode.

Two-direction air vane

The unit will decide the louver direction according to operation mode.

Sleep mode auto control

The fan is turn to low speed (cooling/heating).
The unit will be turn off at the seventh hour.

Independent dehumidification

The function is usually used in rainy days in springtime or damp areas.

Self-diag. function

The function will be operate in any operation

Air flow Direction control

The louver can be set at the desired position or swing up and down automatically

Auto mode

The unit can be change by the room temperature.

Ionizer (Optional)

Vitamin C filter, Bio filter , Sliver filter ,3M HAF filter (Optional)

Follow me (Optional)

FP function (Optional)

Under FP function, the unit runs in heating mode with 8□setting temp. It can protect the indoor ambient from freezing.

Self-cleaning

Anti-cold function

Prevent the cold wind at the beginning of unit start.

Temp. Compensation

Defrost mode

Auto-restart function

Flexible wiring connection

Easy clean panel

Outdoor unit

Power relay control

The unit has 3 mins delay between continuously ON/OFF operations.

Heating Belt (Optional)

Low ambient kit (Optional)

The unit can operate in cooling mode at low ambient temperature conditions.

Low noise air flow system

Bird tail propeller fan makes the outdoor unit run more quietly.

Hydrophilic aluminum fin

The hydrophilic fin can improve the heating efficiency at operation mode.

4 way valve control

It is only operated in the heating operation mode except defrosting operation.

Discharge pipe temperature protect

Anti-rust cabinet

Made from electrolytic zinc steel sheet and anti-rust coated components.

Valve protection cover

It protects the valves and prevents water from dripping.

3. Dimension

3.1 Indoor unit

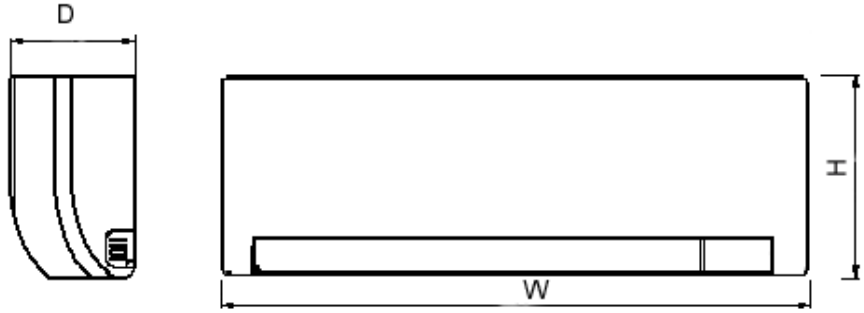

Dimension / Mode	W	D	H
7K	845	165	290
9K	845	165	290
12K	845	165	290
18K	995	200	292

3.2 Outdoor unit

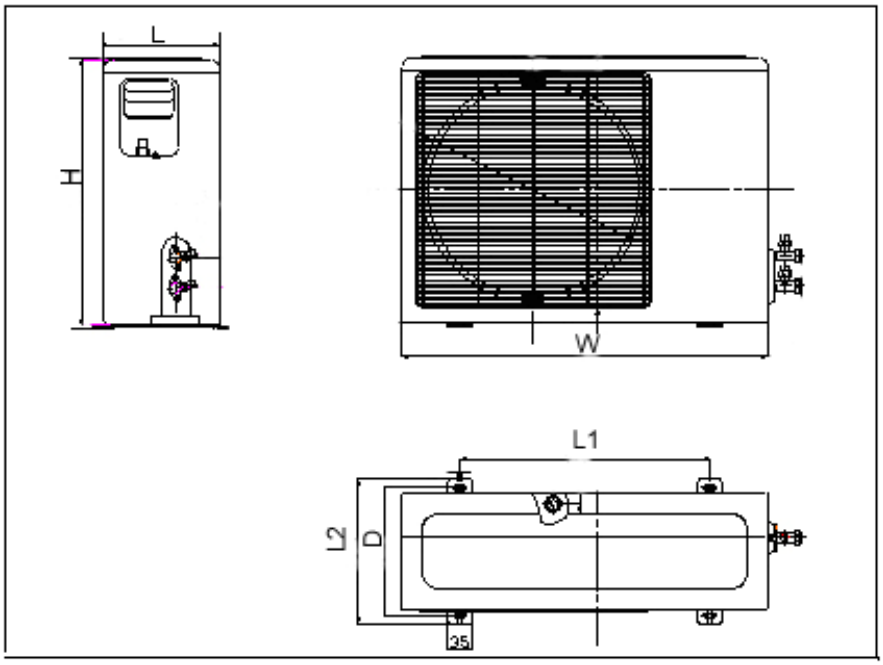

Dimension / Mode	W	H	L	L1	L2	D
7K	685	430	260	460	276	450
9K	700	535	235	548	250	555
12K	780	540	250	548	266	560
18K	760	590	285	530	290	610

4. Refrigerant cycle diagram

- **Cooling only**

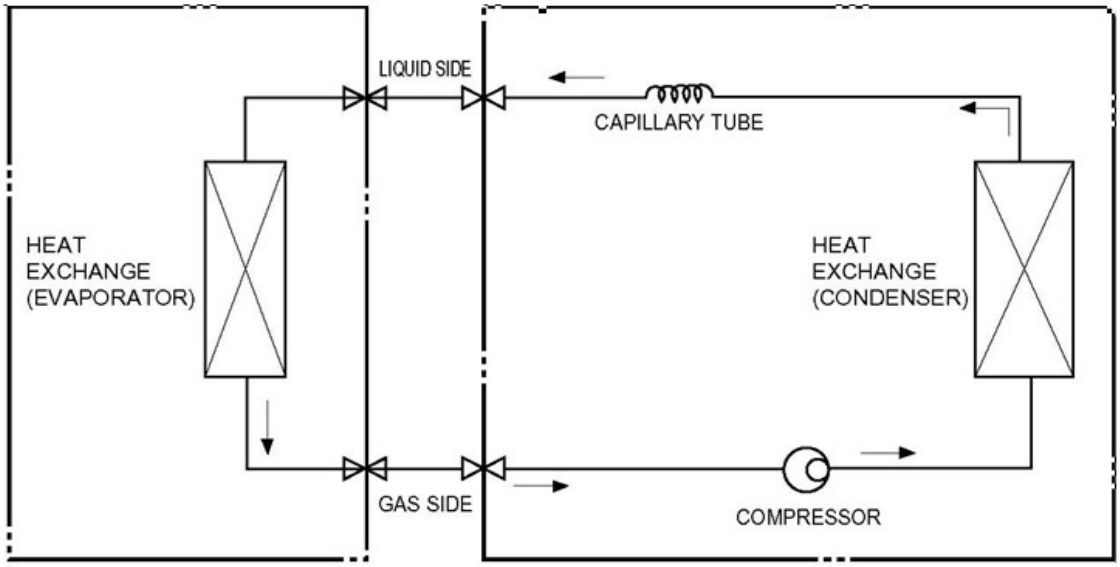

- **Heat pump mode**

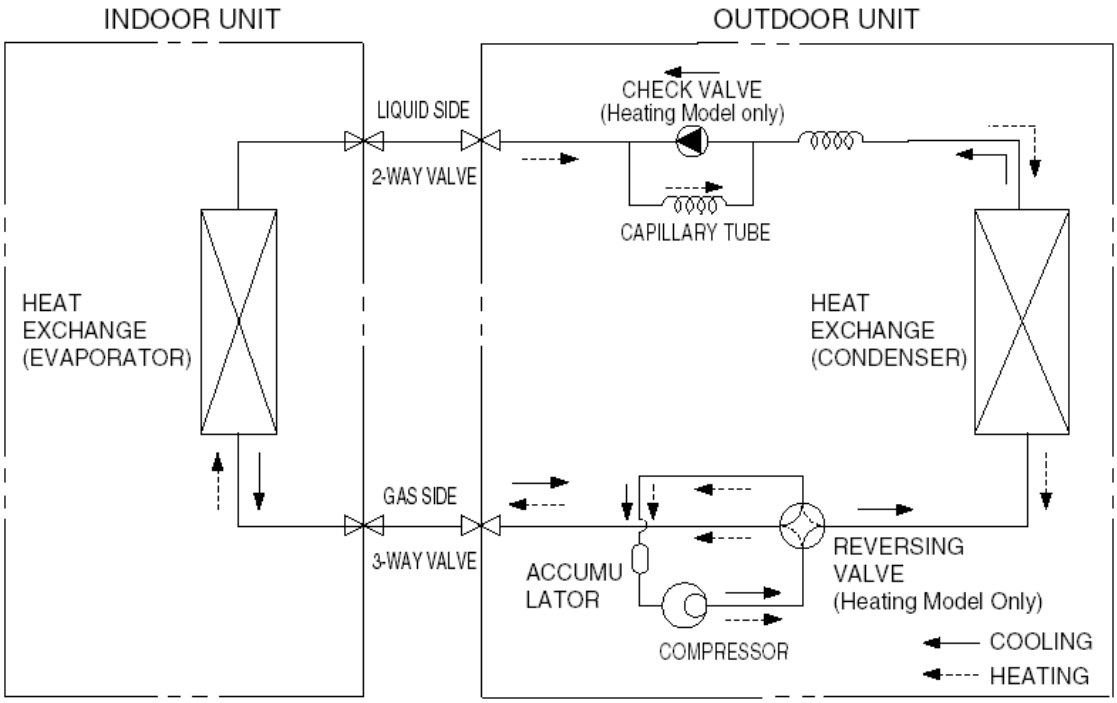

5. Operation limits

5.1 Cooling operation

Outdoor unit air temp.▫DB

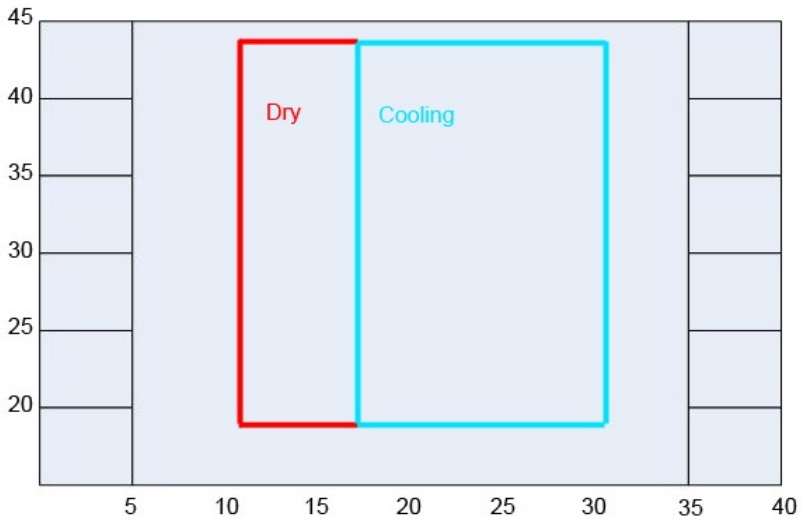

Indoor air temp. ▫DB

Note: The chart is the result from the continuous operation under constant air temperature conditions. However, excludes the initial pull-down stage.

5.2 Heating operation

Indoor air temp. ▫DB

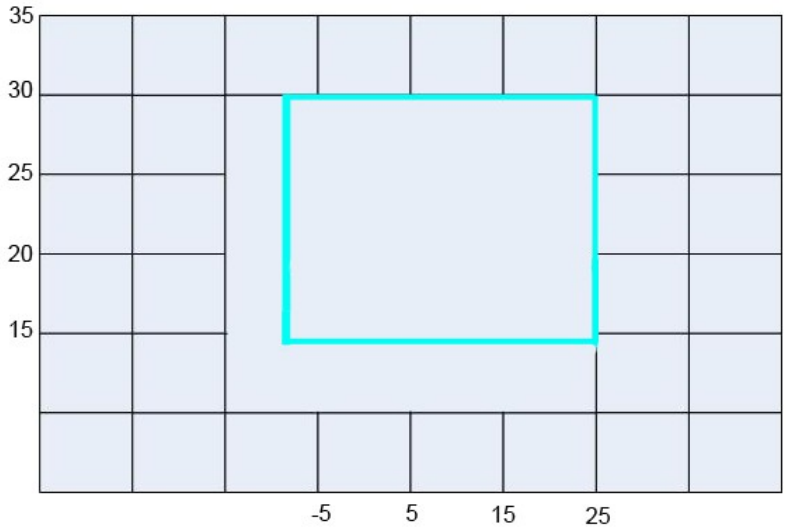

Outdoor unit air temp.▫DB

Note: The chart is the result from the continuous operation under constant air temperature conditions. However, excludes the initial pull-down stage.

6. Wiring diagram

6.1 MS9V1i-07HRN1-QC2

Indoor unit:

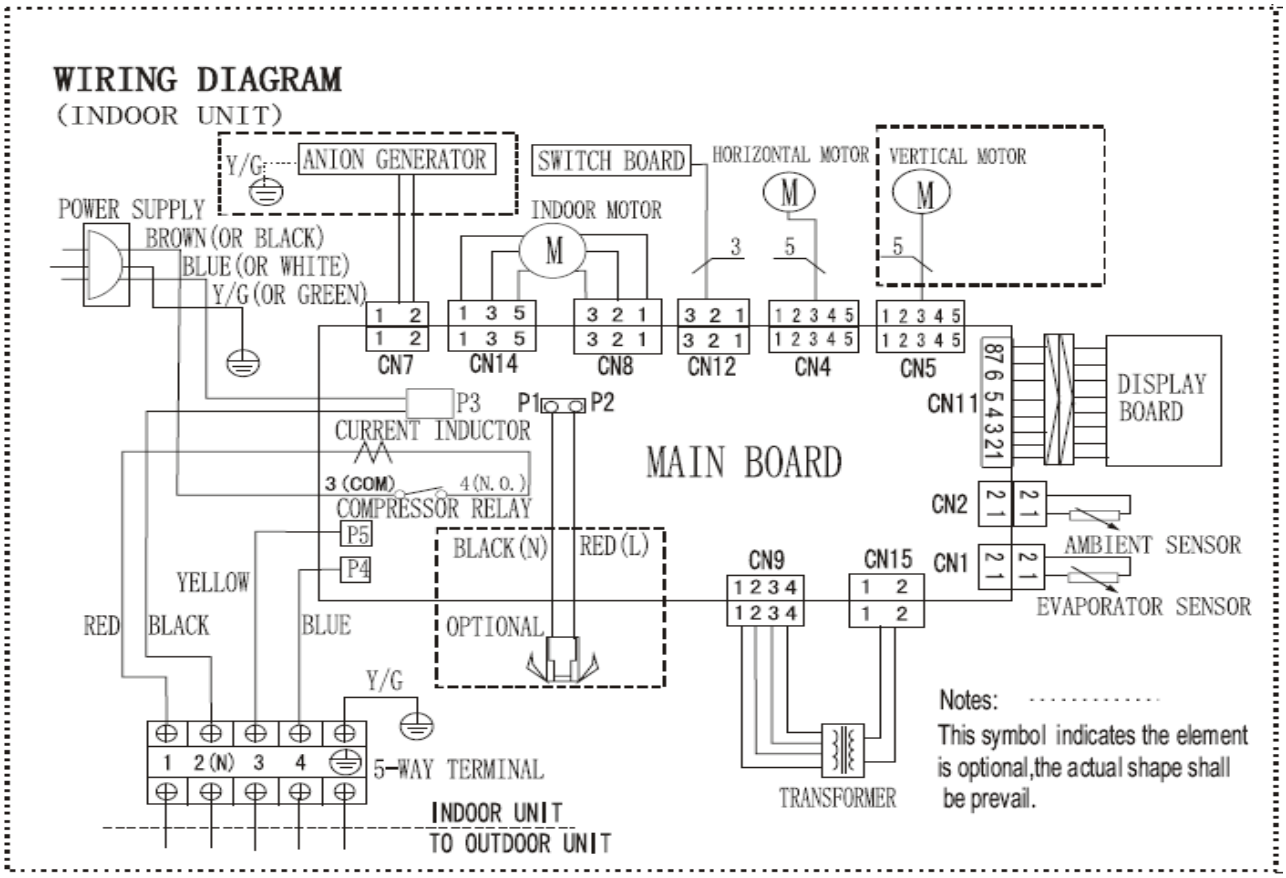

Outdoor unit :

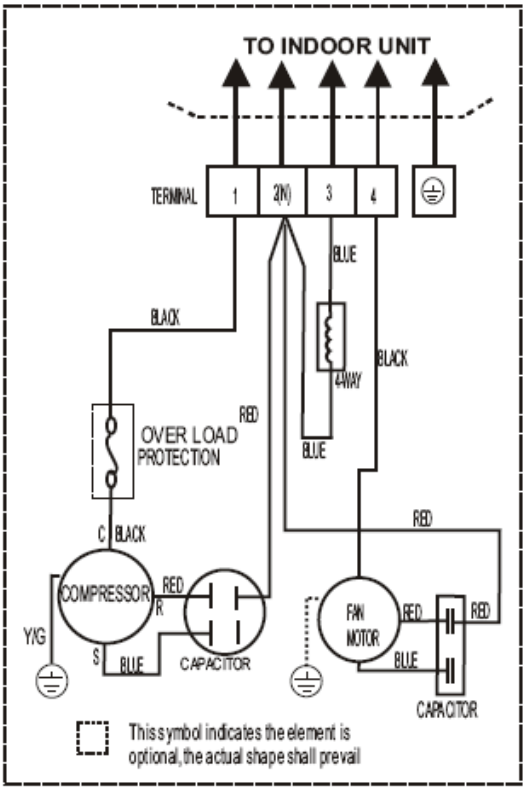

6.2 MS9V1i-09HRN1-QC2 , MS9V1i-12HRN1-QC2

Indoor unit:

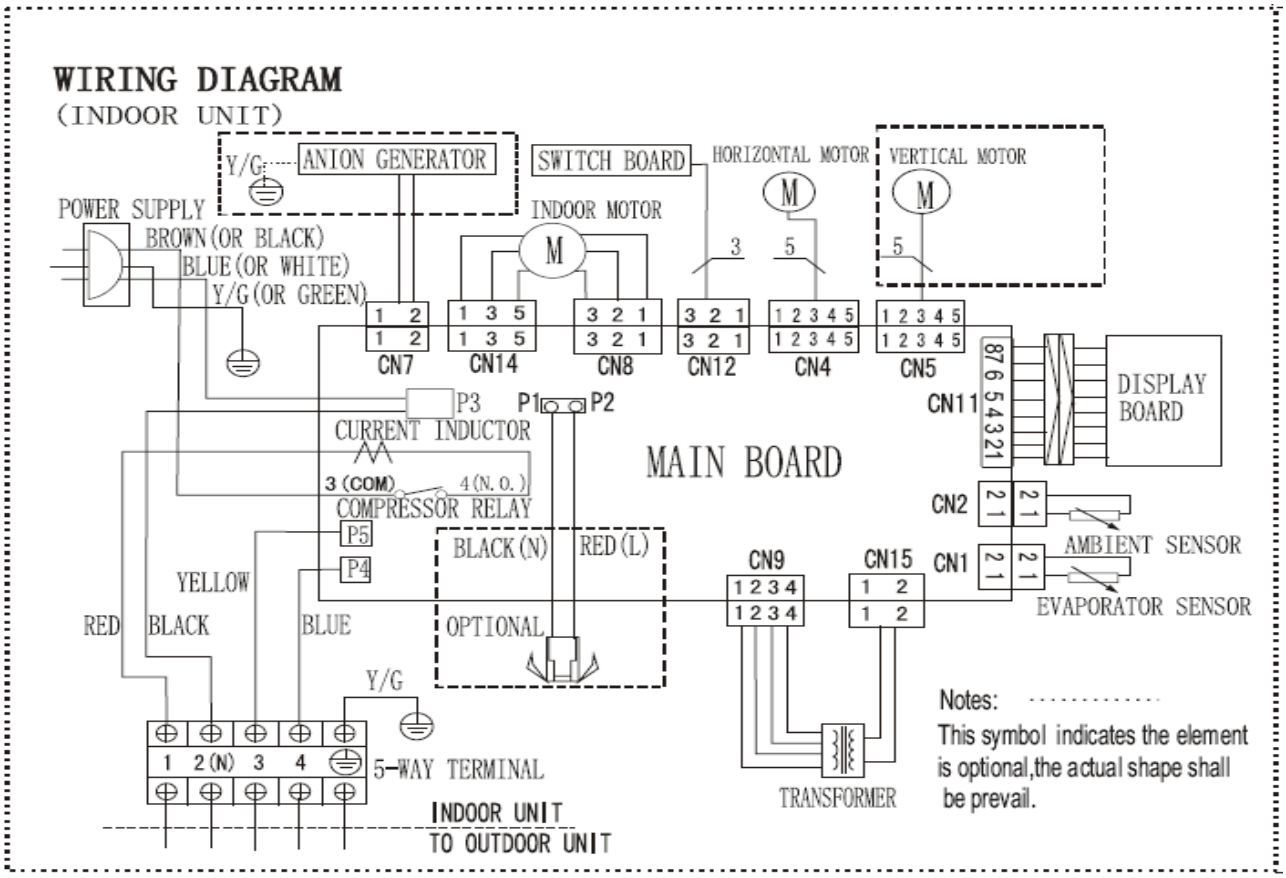

Outdoor unit:

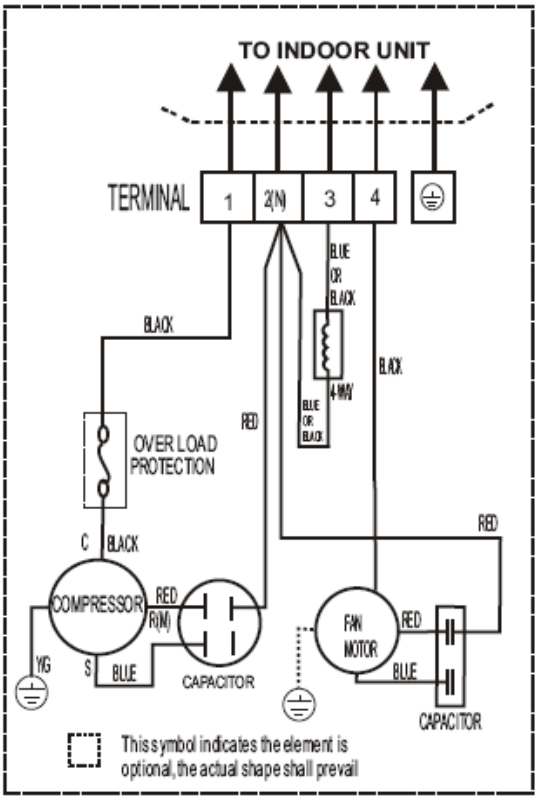

6.3 MS9V1i-18HRN1-QC0

Indoor unit:

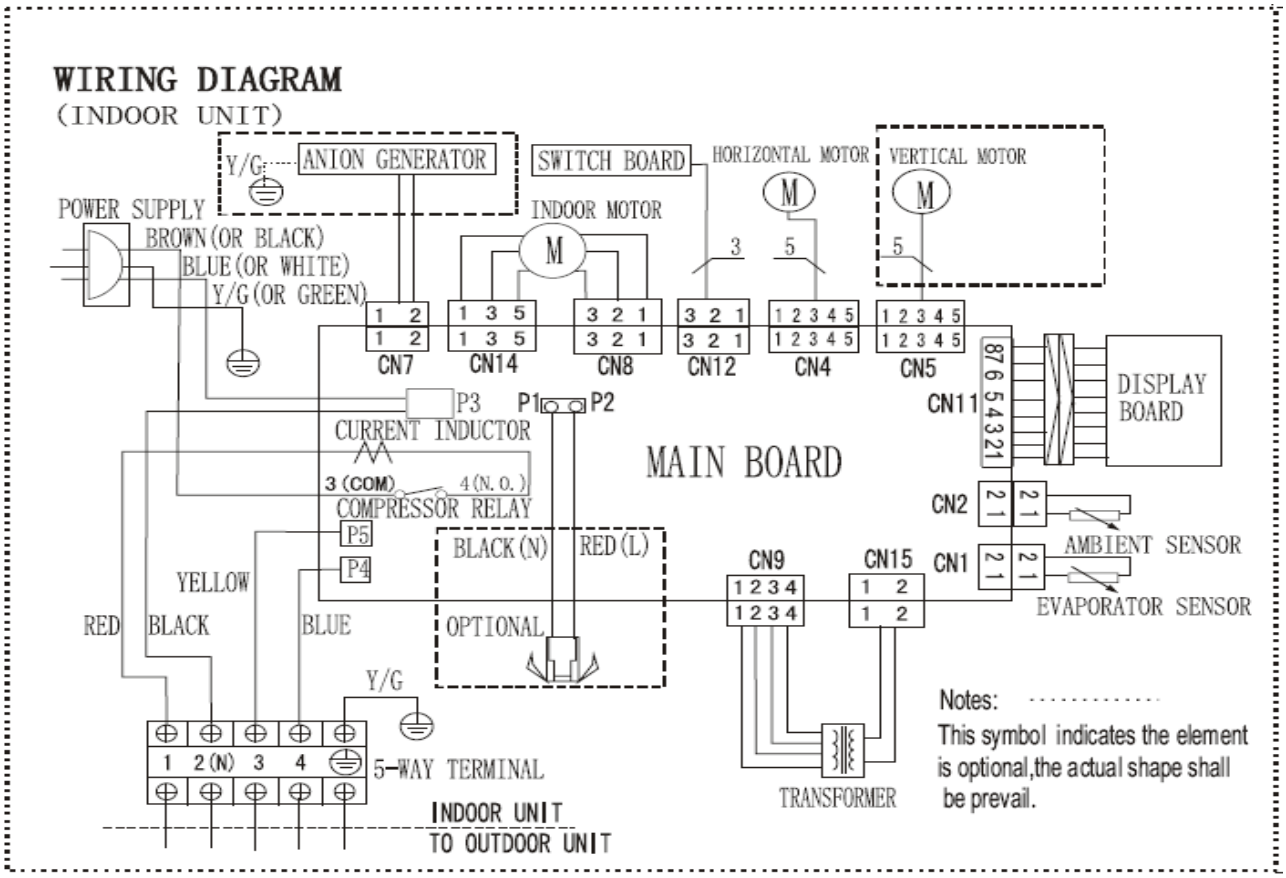

Outdoor unit

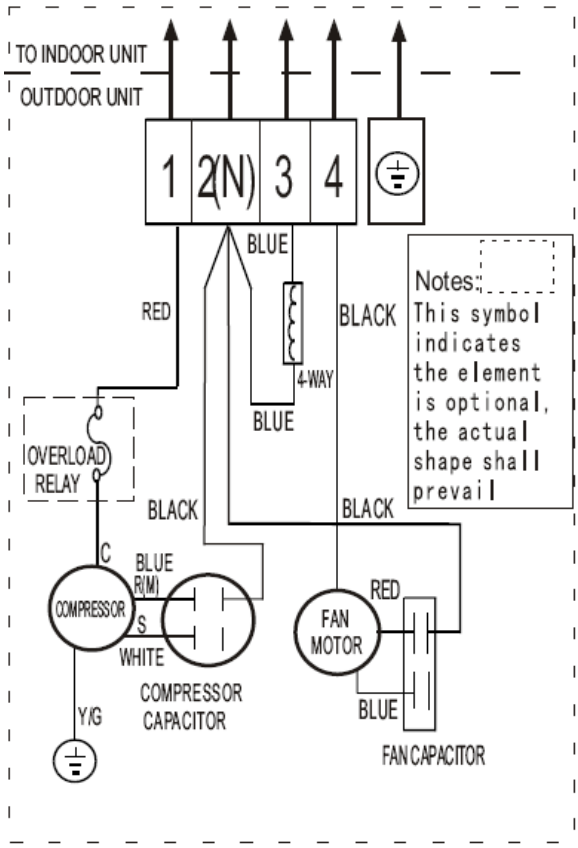

7. Installation details

7.1 Wrench torque sheet for installation

Outside diameter		Torque
mm	inch	Kg.m
φ6.35	1/4	1.8
φ9.52	3/8	4.2
φ12.7	1/2	5.5

7.2 Connecting the cables

The power cord of connect should be selected according to the following specifications sheet.

	Grade			
Unit	7K	9K	12K	18K
mm^2	0.75	0.75	1.0	1.5

7.3 Pipe length and the elevation

Capacity Btu/h	Pipe size		Standard length(m)	Max. ElevationB (m)	Max. Pipe lengthA (m)	Additional refrigerant(g/m)
	GAS	LIQUID				
07K	3/8" (φ9.52)	1/4" (φ6.35)	5	8	20	20
09K	3/8" (φ9.52)	1/4" (φ6.35)	5	8	20	20
12K	3/8" (φ9.52)	1/4" (φ6.35)	5	8	20	20
18K	1/2" (φ12.7)	1/4" (φ6.35)	5	10	25	20

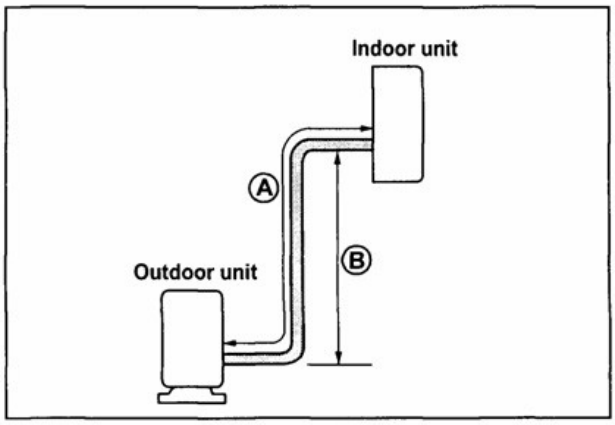

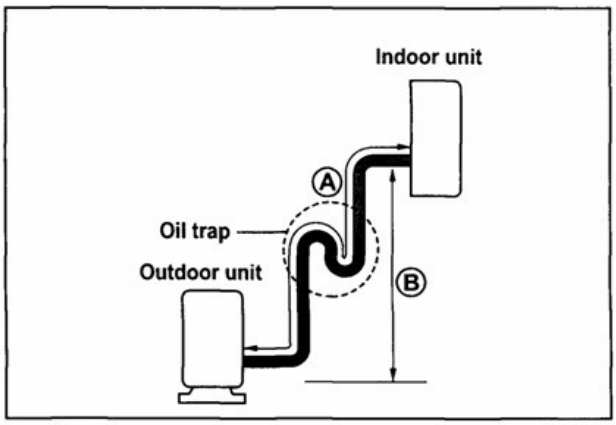

Caution:

Capacity is base on standard length and maximum allowance length is base of reliability.

Oil trap should be install per 5-7 meters.

7.4 Air purging of the piping and indoor unit

Required tools:

Hexagonal wrench; adjustable wrench; torque wrenches, wrench to hold the joints and gas leak detector.

Note:

The air in the indoor unit and in the piping must be purged. If air remains in the refrigeration piping, it will affect the compressor, reduce the cooling capacity, and could lead to a malfunction of unit.

Be sure, using a torque wrench to tighten the service port cap (after using the service port), so that it prevents the gas leakage from the refrigeration cycle.

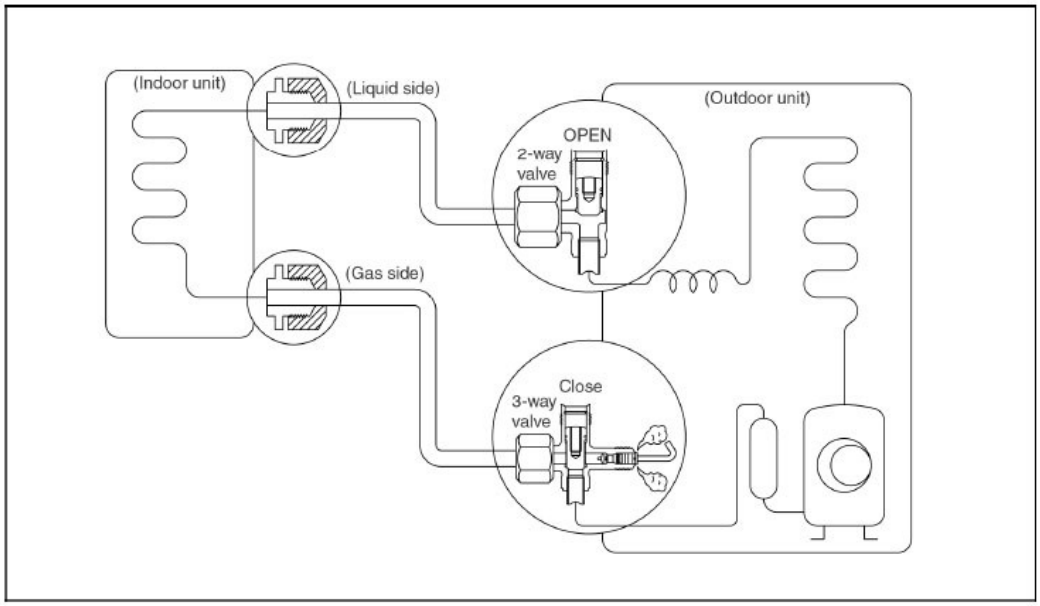

Procedure

1. **Recheck the piping connections.**
2. **Open the valve stem of the 2-way valve counterclockwise approximately 90', wait 10 seconds, and then set it to closed position.**
   - Be sure to use a hexagonal wrench to operate the valve stem
3. **Check for gas leakage.**
   - Check the flare connection for gas leakage
4. **Purge the air from the system.**
   - Set the 2-way valve to the open position and remove the cap from the 3-way valve's service port.
   - Using the hexagonal wrench to press the valve core pin, discharge for three seconds and then wait for one minute.
5. **Use torque wrench to tighten the service port cap to a torque of 1.8 kg.m. (18n.m)**
6. **Set the 3-way valve to the opened position.**
7. **Mounted the valve stem nuts to the 2-way and 3-way valves.**
8. **Check for gas leakage.**
   - At this time, especially check for gas leakage from the 2-way and 3-way stem nuts, and from the service port.

Caution:

If gas leakage is discovered in step (3) above, take the following measures.

If the leaks stop when the piping connections are tightened further, continue working from step (4).

If the gas leaks do not stop when the connections are retightened, repair the location of the leak, discharge all of the gas through the service port, and then recharge with the specified amount of gas from a gas cylinder.

7.5 Pumping down (Re-installation)

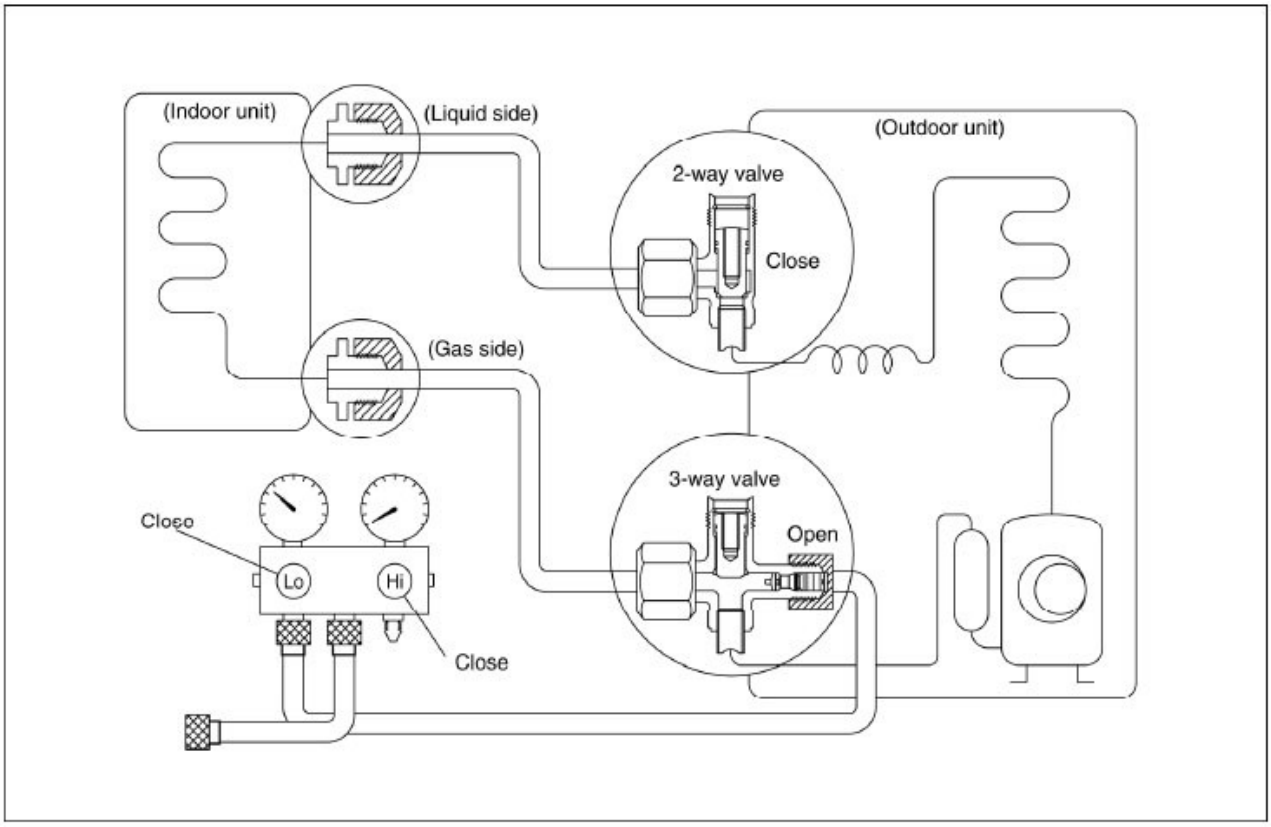

Procedure

Confirm that both the 2-way and 3-way valves are set to the opened position.

- Remove the valve stem caps and confirm that the valve stems are in the opened position.
- Be sure to use a hexagonal wrench to operate the valve stems.

Operate the unit for 10 to 15 minutes.

Stop operation and wait for 3 minutes, then connect the charge set to the service port of the 3-way valve.

- Connect the charge hose with the push pin to the gas service port.

Air purging of the charge hose.

- Open the low-pressure valve on the charge set slightly to purge air from the charge hose.

Set the 2-way valve to the close position.

Operate the air conditioner at the cooling cycle and stop it when the gauge indicates 0.1MPa.

Immediately set the 3-way valve to the closed position.

- Do this quickly so that the gauge ends up indicating 0.3 to 0.5Mpa.

Disconnect the charge set, and amount the 2-way and 3-way valve's stem nuts and service port caps.

- Use a torque wrench to tighten the service port cap to a torque of 1.8 kg.m.
- Be sure to check for gas leakage.

7.6 Re-air purging (Re-installation)

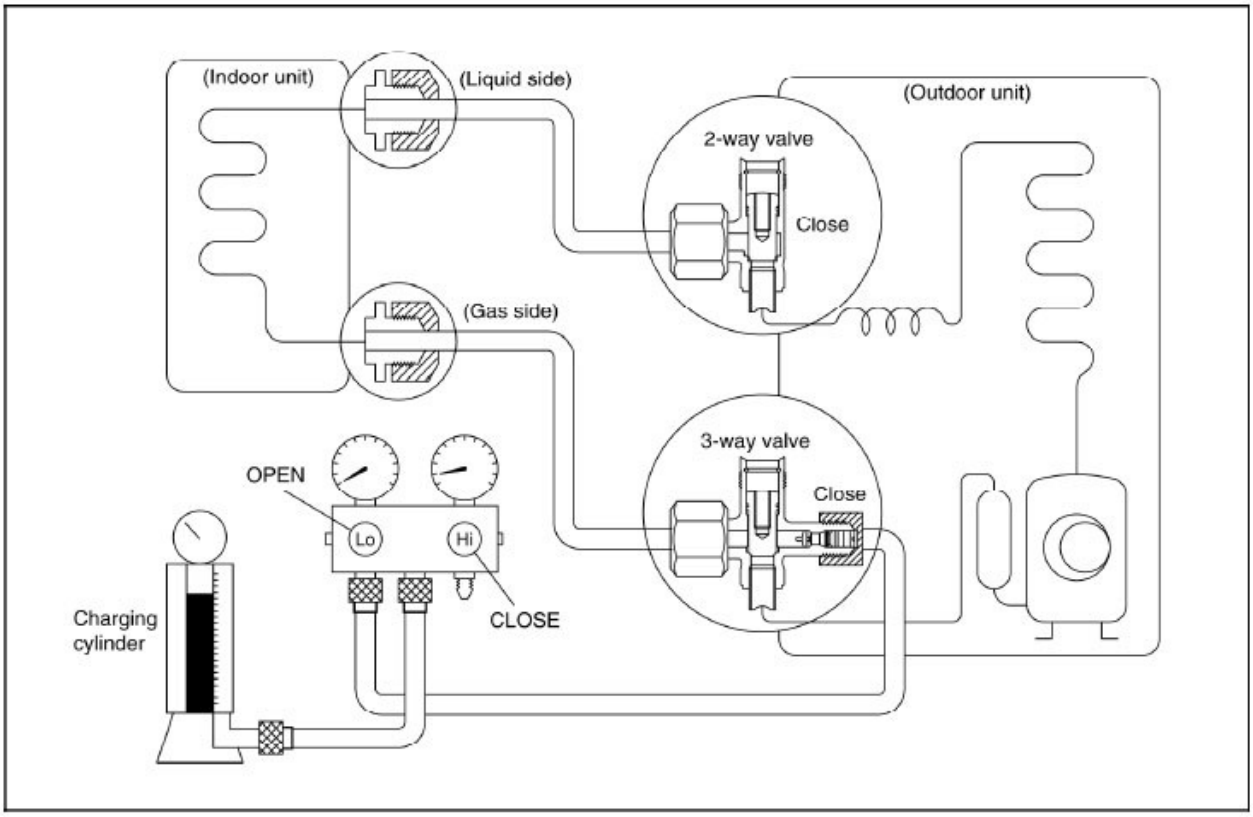

Procedure:

1.Confirm that both the 2-way and 3-way valves are set to the closed position.

2.Connect the charge set and a charging cylinder to the service port of the 3-way valve.

- Leave the valve on the charging cylinder closed.

3.Air purging.

- Open the valves on the charging cylinder and the charge set. Purge the air by loosening the flare nut on the 2-way valve approximately 45’ for 3 seconds then closing it for 1 minutes; repeat 3 times.
- After purging the air, use a torque wrench to tighten the flare nut to on the 2-way valve.

4.Check the gas leakage.

- Check the flare connections for gas leakage.

5.Discharge the refrigerant.

- Close the valve on the charging cylinder and discharge the refrigerant until the gauge indicate 0.3 to 0.5 Mpa.

6.Disconnect the charge set and the charging cylinder, and set the 2-way and 3-way valves to the open position.

- Be sure to use a hexagonal wrench to operate the valve stems.

7.Mount the valve stems nuts and the service port cap.

- Be sure to use a torque wrench to tighten the service port cap to a torque 18N.m.
- Be sure to check the gas leakage.

-

7.7 Balance refrigerant of the 2-way, 3-way valves

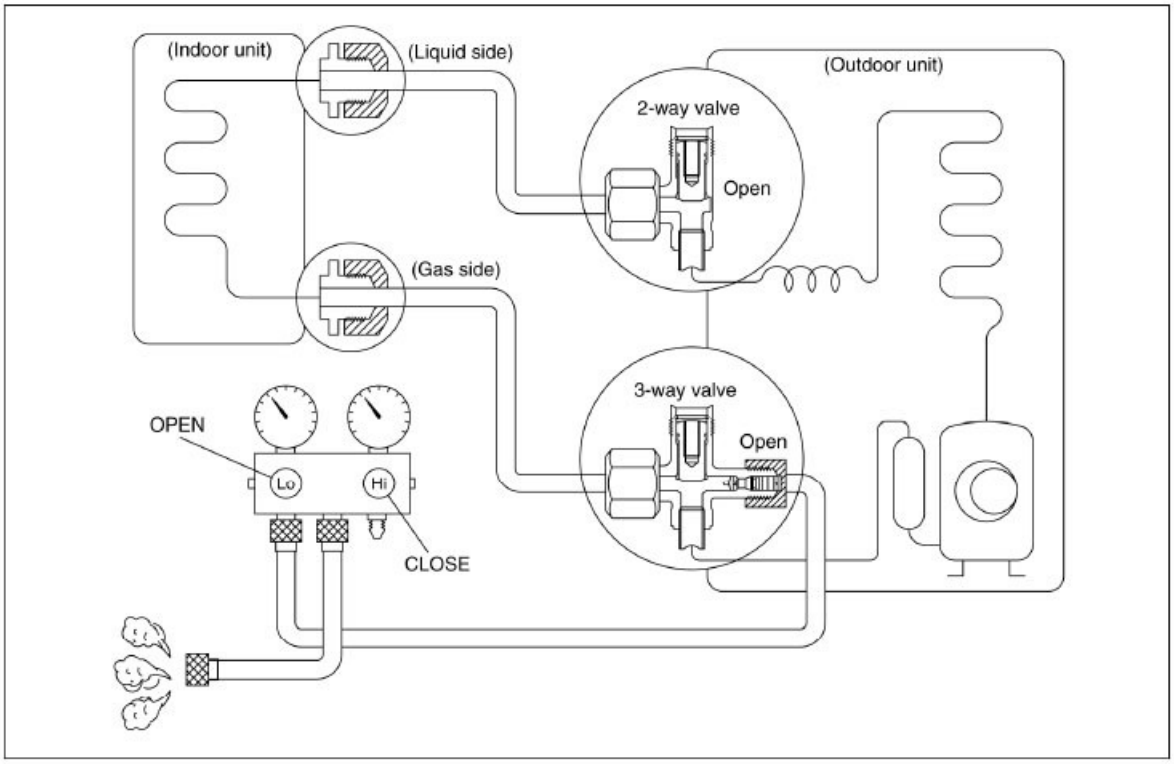

Procedure:

1.Confirm that both the 2-way and 3-way valves are set to the open position.

2.Connect the charge set to the 3-way valve's service port.

- Leave the valve on the charge set closed.
- Connect the charge hose with the push pin to the service port.

3.Open the valves (Low side) on the charge set and discharge the refrigerant until the gauge indicates 0.05 to 0.1 Mpa.

- If there is no air in the refrigeration cycle [the pressure when the air conditioner is not running is higher than 0.1Mpa, discharge the refrigerant until the gauge indicates 0.05 to 0.1 Mpa. If this is the case, it will not be necessary to apply a evacuation.
- Discharge the refrigeration gradually; if it is discharged too suddenly, the refrigeration oil sill be discharged.

7.8 Evacuation

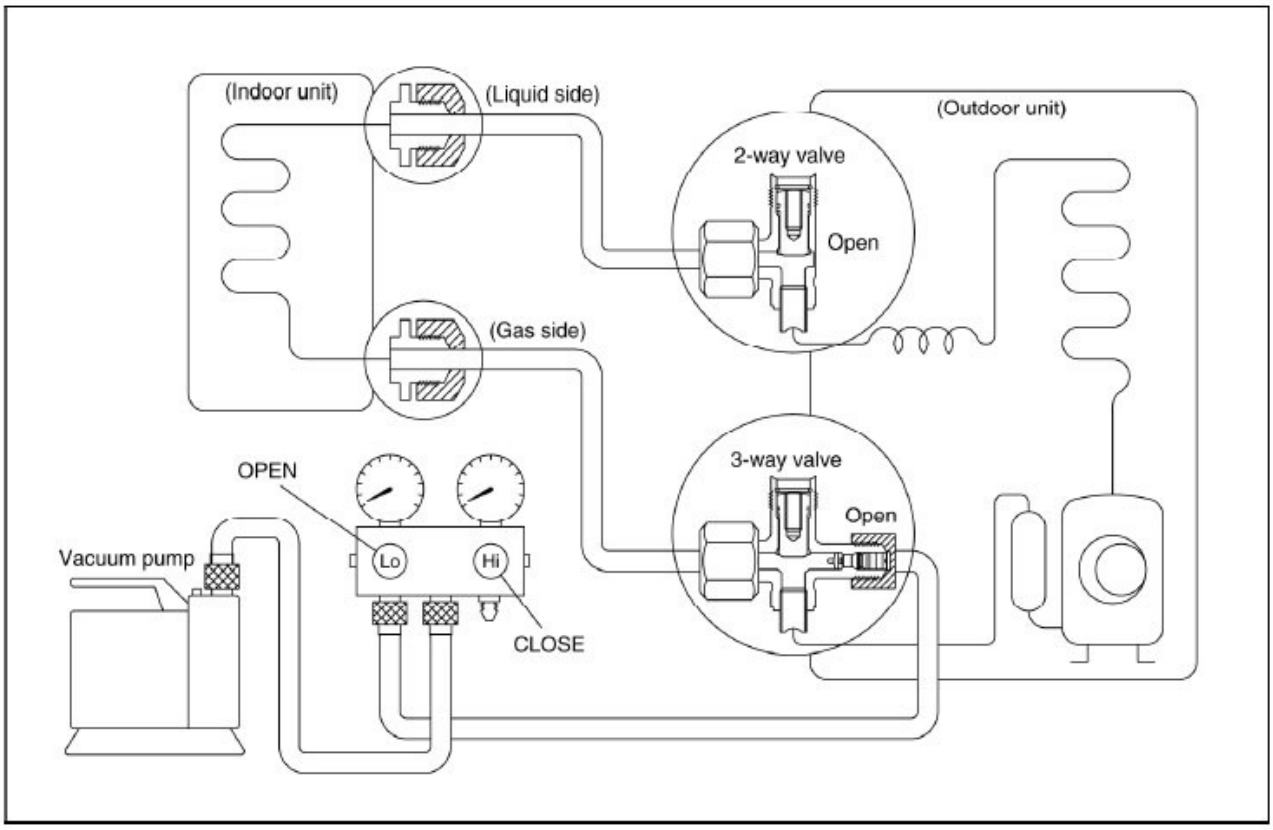

Procedure:

1. **Connect the vacuum pump to the charge set's centre hose.**
2. **Evacuation for approximately one hour.**

- Confirm that the gauge needle has moved toward -0.1 Mpa (-76 cmHg) [vacuum of 4 mmHg or less].

3. **Close the valve (Low side) on the charge set, turn off the vacuum pump, and confirm that the gauge needle does not move (approximately 5 minutes after turning off the vacuum pump).**
4. **Disconnect the charge hose from the vacuum pump.**

- Vacuum pump oil, if the vacuum pump oil becomes dirty or depleted, replenish as needle.

7.9 Gas charging

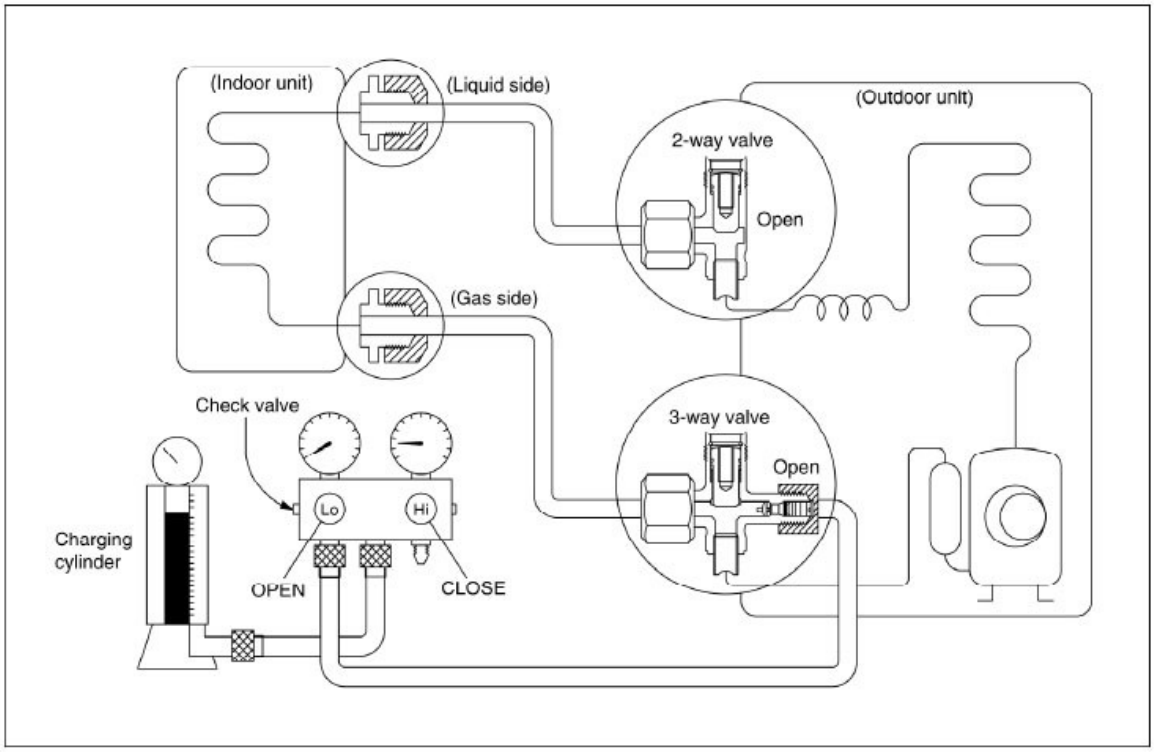

Procedure:

1.Connect the charge hose to the charging cylinder.

- Connect the charge hose which you disconnected from the vacuum pump to the valve at the bottom of the cylinder.

2.Purge the air from the charge hose.

- Open the valve at the bottom of the cylinder and press the check valve on the charge set to purge the air (be careful of the liquid refrigerant).

3.Open the valves (Low side) on the charge set and charge the system with liquid refrigerant.

- If the system cannot be charge with the specified amount of refrigerant, if can be charged with a little at a time (approximately 150g each time0 while operating the air conditioner in the cooling cycle; however, one time is not sufficient, wait approximately 1 minute and then repeat the procedure.(pumping down-pin).

4.Immediately disconnect the charge hose from the 3-way valve's service port.

- Stopping partway will allow the refrigerant to be discharged.
- If the system has been charged with liquid refrigerant while operating the air conditioner, turn off the air conditioner before disconnecting the hose.

5.Mounted the valve stem caps and the service port

- Use torque wrench to tighten the service port cap to a torque of 18N.m.
- Be sure to check for gas leakage.

8. Capacity table

8.1 MS9V1i-07HRN1-QC2

COOLING	▫	OUTDOOR TEMPERATURE DRY					
Indoor Conditions	▫	**21ºC**	**25ºC**	**30ºC**	**35ºC**	**40ºC**	**45ºC**
21ºC D 15ºC W	Total capacity kW	1.90	1.88	1.86	1.82	1.46	1.37
	Sensitive capacity kW	1.52	1.50	1.49	1.46	1.17	1.09
	Input kW.	2.05	2.03	2.02	1.98	2.04	2.12
24ºC D 17ºC W	Total capacity kW	1.94	1.92	1.90	1.87	1.49	1.40
	Sensitive capacity kW	1.55	1.54	1.52	1.49	1.19	1.12
	Input kW.	0.65	0.64	0.64	0.62	0.64	0.67
27ºC D 19ºC W	Total capacity kW	2.13	2.11	2.09	2.05	1.64	1.54
	Sensitive capacity kW	1.71	1.69	1.67	1.64	1.31	1.23
	Input kW.	0.66	0.66	0.65	0.64	0.66	0.68
32ºC D 23ºC W	Total capacity kW	2.39	2.36	2.34	2.30	1.84	1.72
	Sensitive capacity kW	1.91	1.89	1.87	1.84	1.47	1.38
	Input kW.	0.74	0.74	0.73	0.72	0.74	0.77

HEATING	▫	OUTDOOR CONDITIONS						
Indoor Conditions	▫	**24ºC D 18ºC W**	**12ºC D 11ºC W**	**7ºC D 6ºC W**	**4ºC D 3ºC W**	**0ºC D -1ºC W**	**5ºC D -6ºC W**	**-7ºC D -8ºC W**
15ºC	Capacity kW	3.00	2.97	2.60	2.13	1.82	1.43	1.32
	Input kW.	0.83	0.82	0.72	0.67	0.65	0.57	0.56
18ºC	Capacity kW	2.86	2.83	2.48	2.03	1.74	1.36	1.27
	Input kW.	0.79	0.79	0.69	0.64	0.62	0.55	0.53
20ºC	Capacity kW	2.70	2.67	2.34	1.92	1.64	1.29	1.19
	Input kW.	0.75	0.74	0.65	0.60	0.59	0.52	0.50
22ºC	Capacity kW	2.30	2.27	1.99	1.63	1.39	1.09	1.01
	Input kW.	0.69	0.68	0.60	0.55	0.54	0.48	0.46
27ºC	Capacity kW	2.30	2.27	1.99	1.63	1.39	1.09	1.01
	Input kW.	0.70	0.69	0.61	0.56	0.55	0.48	0.47

8.2 MS9V1i-09HRN1-QC2

COOLING	▫	OUTDOOR TEMPERATURE DRY					
Indoor Conditions	▫	**21ºC**	**25ºC**	**30ºC**	**35ºC**	**40ºC**	**45ºC**
21ºC D 15ºC W	Total capacity kW	2.44	2.42	2.40	2.35	1.88	1.76
	Sensitive capacity kW	1.95	1.94	1.92	1.88	1.50	1.41
	Input kW.	2.64	2.62	2.60	2.55	2.62	2.73
24ºC D 17ºC W	Total capacity kW	2.50	2.47	2.45	2.40	1.92	1.80
	Sensitive capacity kW	2.00	1.98	1.96	1.92	1.54	1.44
	Input kW.	0.83	0.82	0.82	0.80	0.82	0.86
27ºC D 19ºC W	Total capacity kW	2.75	2.72	2.69	2.64	2.11	1.98
	Sensitive capacity kW	2.20	2.18	2.15	2.11	1.69	1.58
	Input kW.	0.85	0.84	0.84	0.82	0.84	0.88
32ºC D 23ºC W	Total capacity kW	3.08	3.05	3.02	2.96	2.37	2.22
	Sensitive capacity kW	2.46	2.44	2.41	2.37	1.89	1.77
	Input kW.	0.95	0.94	0.94	0.92	0.95	0.98

HEATING	▫	OUTDOOR CONDITIONS						
Indoor Conditions	▫	**24ºC D 18ºC W**	**12ºC D 11ºC W**	**7ºC D 6ºC W**	**4ºC D 3ºC W**	**0ºC D -1ºC W**	**5ºC D -6ºC W**	**-7ºC D -8ºC W**
15ºC	Capacity kW	3.56	3.52	3.09	2.53	2.16	1.70	1.57
	Input kW.	0.99	0.97	0.85	0.79	0.77	0.68	0.66
18ºC	Capacity kW	3.40	3.37	2.95	2.42	2.06	1.62	1.50
	Input kW.	0.94	0.93	0.81	0.75	0.74	0.65	0.63
20ºC	Capacity kW	3.21	3.17	2.78	2.28	1.95	1.53	1.42
	Input kW.	0.89	0.88	0.77	0.71	0.70	0.61	0.60
22ºC	Capacity kW	2.73	2.70	2.36	1.94	1.65	1.30	1.21
	Input kW.	0.82	0.81	0.71	0.66	0.64	0.57	0.55
27ºC	Capacity kW	2.73	2.70	2.36	1.94	1.65	1.30	1.21
	Input kW.	0.83	0.82	0.72	0.66	0.65	0.57	0.56

8.3 MS9V1i-12HRN1-QC2

COOLING		OUTDOOR TEMPERATURE DRY					
Indoor Conditions		**21°C**	**25°C**	**30°C**	**35°C**	**40°C**	**45°C**
21°C D 15°C W	Total capacity kW	3.26	3.23	3.20	3.13	2.51	2.35
	Sensitive capacity kW	2.61	2.58	2.56	2.51	2.00	1.88
	Input kW.	3.52	3.49	3.46	3.40	3.50	3.63
24°C D 17°C W	Total capacity kW	3.33	3.30	3.27	3.20	2.56	2.40
	Sensitive capacity kW	2.67	2.64	2.61	2.56	2.05	1.92
	Input kW.	1.10	1.09	1.08	1.06	1.10	1.14
27°C D 19°C W	Total capacity kW	3.66	3.63	3.59	3.52	2.82	2.64
	Sensitive capacity kW	2.93	2.90	2.87	2.82	2.25	2.11
	Input kW.	1.13	1.12	1.11	1.09	1.12	1.17
32°C D 23°C W	Total capacity kW	4.10	4.06	4.02	3.94	3.15	2.96
	Sensitive capacity kW	3.28	3.25	3.22	3.15	2.52	2.37
	Input kW.	1.26	1.25	1.25	1.22	1.26	1.31

HEATING		OUTDOOR CONDITIONS						
Indoor Conditions		**24°C D 18°C W**	**12°C D 11°C W**	**7°C D 6°C W**	**4°C D 3°C W**	**0°C D -1°C W**	**5°C D -6°C W**	**-7°C D -8°C W**
15°C	Capacity kW	5.26	5.20	4.55	3.73	3.19	2.50	2.32
	Input kW.	1.45	1.43	1.25	1.16	1.13	1.00	0.97
18°C	Capacity kW	5.02	4.96	4.35	3.56	3.04	2.39	2.22
	Input kW.	1.38	1.37	1.20	1.11	1.08	0.95	0.93
20°C	Capacity kW	4.74	4.68	4.10	3.36	2.87	2.26	2.09
	Input kW.	1.31	1.29	1.13	1.05	1.02	0.90	0.88
22°C	Capacity kW	4.03	3.98	3.49	2.86	2.44	1.92	1.78
	Input kW.	1.20	1.19	1.04	0.96	0.94	0.83	0.81
27°C	Capacity kW	4.03	3.98	3.49	2.86	2.44	1.92	1.78
	Input kW.	1.22	1.20	1.05	0.97	0.95	0.84	0.82

8.4 MS9V1i-18HRN1-QC0

COOLING	▫	OUTDOOR TEMPERATURE DRY					
Indoor Conditions	▫	**21°C**	**25°C**	**30°C**	**35°C**	**40°C**	**45°C**
21°C D 15°C W	Total capacity kW	4.61	4.57	4.52	4.43	3.55	3.32
	Sensitive capacity kW	3.69	3.65	3.62	3.55	2.84	2.66
	Input kW.	4.97	4.94	4.90	4.81	4.95	5.14
24°C D 17°C W	Total capacity kW	4.71	4.67	4.62	4.53	3.63	3.40
	Sensitive capacity kW	3.77	3.73	3.70	3.63	2.90	2.72
	Input kW.	1.68	1.66	1.65	1.62	1.67	1.73
27°C D 19°C W	Total capacity kW	5.18	5.13	5.08	4.98	3.98	3.74
	Sensitive capacity kW	4.14	4.10	4.06	3.98	3.19	2.99
	Input kW.	1.72	1.71	1.69	1.66	1.71	1.78
32°C D 23°C W	Total capacity kW	5.80	5.74	5.69	5.58	4.46	4.18
	Sensitive capacity kW	4.64	4.60	4.55	4.46	3.57	3.35
	Input kW.	1.92	1.91	1.90	1.86	1.91	1.99

HEATING	▫	OUTDOOR CONDITIONS						
Indoor Conditions	▫	**24°C D 18°C W**	**12°C D 11°C W**	**7°C D 6°C W**	**4°C D 3°C W**	**0°C D -1°C W**	**5°C D -6°C W**	**-7°C D -8°C W**
15°C	Capacity kW	6.77	6.69	5.86	4.81	4.10	3.22	2.99
	Input kW.	1.98	1.96	1.72	1.59	1.55	1.37	1.33
18°C	Capacity kW	6.46	6.39	5.60	4.59	3.92	3.08	2.85
	Input kW.	1.89	1.87	1.64	1.52	1.48	1.31	1.27
20°C	Capacity kW	6.10	6.03	5.28	4.33	3.70	2.90	2.69
	Input kW.	1.79	1.77	1.55	1.44	1.40	1.23	1.20
22°C	Capacity kW	5.18	5.13	4.49	3.68	3.14	2.47	2.29
	Input kW.	1.65	1.63	1.43	1.32	1.29	1.14	1.11
27°C	Capacity kW	5.18	5.13	4.49	3.68	3.14	2.47	2.29
	Input kW.	1.67	1.65	1.44	1.34	1.30	1.15	1.12

9. Electronic function

9.1 Proper symbols and their meaning

TA: Indoor ambient temperature

TE: Indoor evaporator temperature

TS: Setting temperature through the remote controller

I_{3sec}: Self-protection amp of compressor, continue three seconds until turns off the compressor.

I_{5MIN}: Self-protection amp of compressor, continue five minutes until turns off the compressor.

I_{FAN}: Self-protection amp of outdoor fan/indoor fans when they change from higher wind to lower wind.

$I_{RESTORE}$: Amp self-protection return value

$TH_{DEFROST}$: High wind, defrosting temperature difference

$TM_{DEFROST}$: Middle wind, defrosting temperature difference

$TL_{DEFROST}$: Low wind, defrosting temperature difference

TE1: Anti-cold wind, from Fan Off to Breeze temperature

TE2: Anti-cold wind, from Breeze to Setting Fan Speed temperature

TE3: Anti-cold wind, from Setting Fan Speed to Breeze temperature

TE4: Anti-cold wind, from Breeze to Fan Off temperature

TE5: Evaporator low temperature protection entering temperature

TE6: Evaporator low temperature protection restoring temperature

TE7: Evaporator high temperature protection, compressor off temperature

TE8: Evaporator high temperature protection, fan off temperature

TE9: Evaporator high temperature protection, restoring temperature

9.2 Function

Remote receiving

Testing and forced running

Position set for indoor unit wind vane

LED displaying and alarm

On or off Timer

Protection for the compressor

High temperature protection of indoor heat exchanger at heating mode

Auto defrosting and heating recovery at heating mode

Anti cold air at heating mode

Anti frozen at cooling mode

9.3 Protection

9.3.1 3minutes delay at restart for compressor.

9.3.2 Sensor protection at open circuit and breaking disconnection

9.3.3 Fan Speed is out of control. When Indoor Fan Speed is too high (higher than 2100RPM) or too low (lower than 300RPM) lasting 50 seconds, the unit stops and LED displays failure information and can’t returns to normal operation automatically.

9.3.4 Cross Zero signal error warning. If there is no Cross Zero signals in 4 minutes, the unit stops and LED displays failure information and can’t returns to normal operation automatically.

9.4 Fan-only mode

Fan speed is high/mid/low/ Auto

9.5 Cooling mode

The 4-way valve is closed at cooling mode.

The action of the compressor and the outdoor fan:(T=indoor temperature)

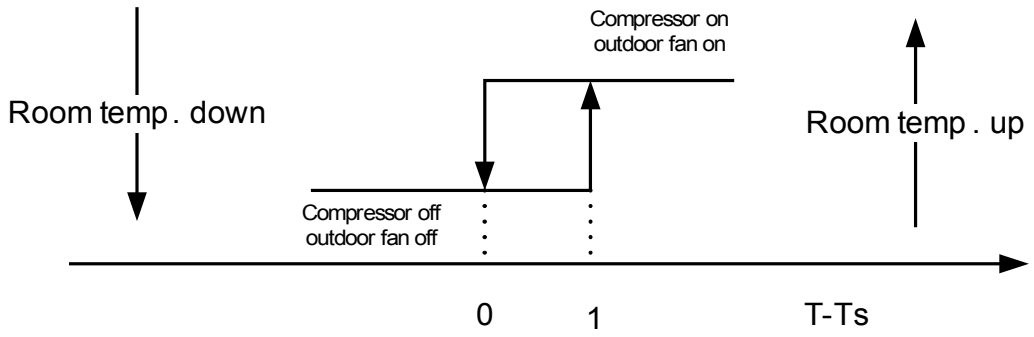

Auto fan at cooling mode:

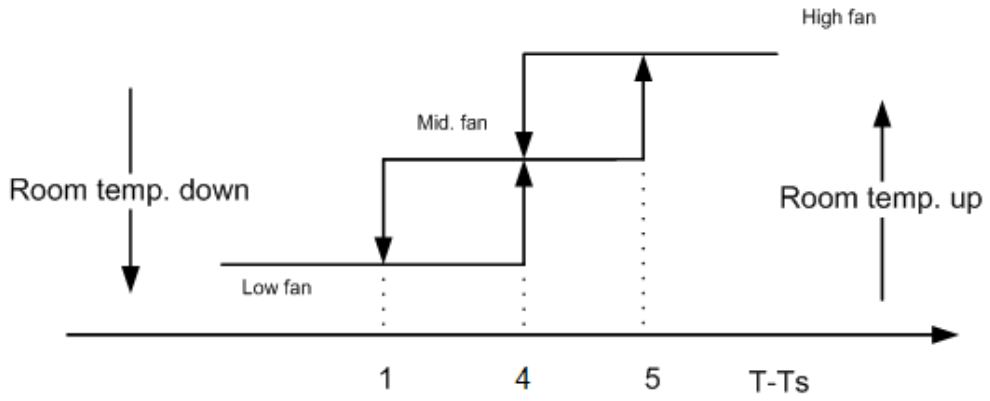

Anti-freezing control to indoor evaporator at cooling mode (T: evaporator temp.)

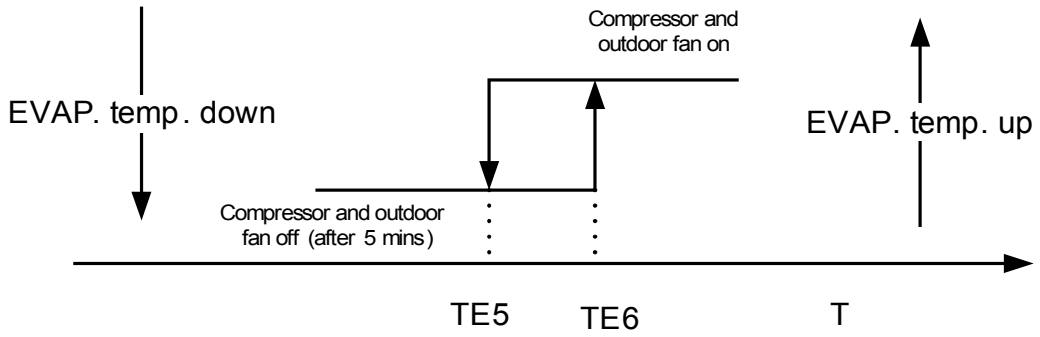

9.6 Dehumidifying mode

9.6.1 The 4-way valve is off in dehumidifying mode

9.6.2 Compressor and Indoor Fan actions in dehumidifying mode

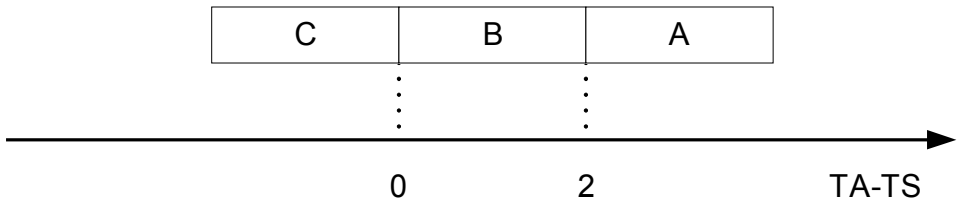

Block	Indoor Fan	Compressor and Outdoor Fan
A	LOW	ON 6minutes
	BREEZE	OFF 4minutes
B	LOW	ON 5minutes
	BREEZE	OFF 5minutes
C	LOW	ON 4minutes
	BREEZE	OFF 6minutes

Repeat on and off cycle.

9.6.3 Low room temperature protection:

When room temperature decreases to below 10ºC compressor and outdoor fan will stop(indoor fan is Breeze). Dehumidifying operation will be resumed when room temperature restores to over 13ºC

9.6.4 At dehumidifying mode, the anti-freezing function of the indoor heat exchanger is the same as that of cooling mode.

9.6.5 At dehumidifying mode, the action of fans of indoor is the same as that of air-only mode.

9.7 Heating mode

9.7.1 Generally, the 4-way valve is open in heating mode, but it is closed in defrosting mode. 4-way valve must delay 2 minutes compared with compressor if the compressor changed into non-heating mode or turned off. 4-way valve doesn't delay in dehumidifying mode

9.7.2 Generally, the outdoor fan is turned off with the on-off action of compressor in heating mode, except for the defrosting mode or the end of defrost

9.7.3 Action of compressor and outdoor fan motor at heating mode: compressor must run for 7 minutes after starting and then judge temperature. Meanwhile other protections are still valid. (T=indoor temperature)

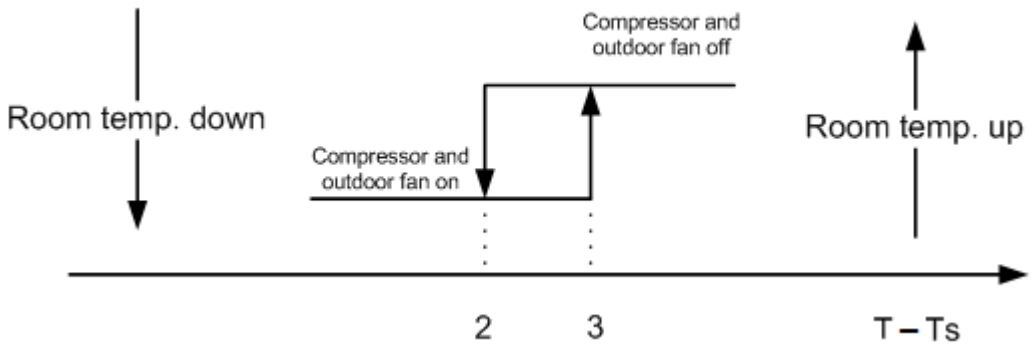

9.7.4 Indoor Fan actions at heating mode

Indoor Fan can be set at HIGH/MID/LOW/AUTO by using a remote controller, but Anti-cold wind function prevails.

Anti-cold wind control function at heating mode (T=indoor exchanger temp.)

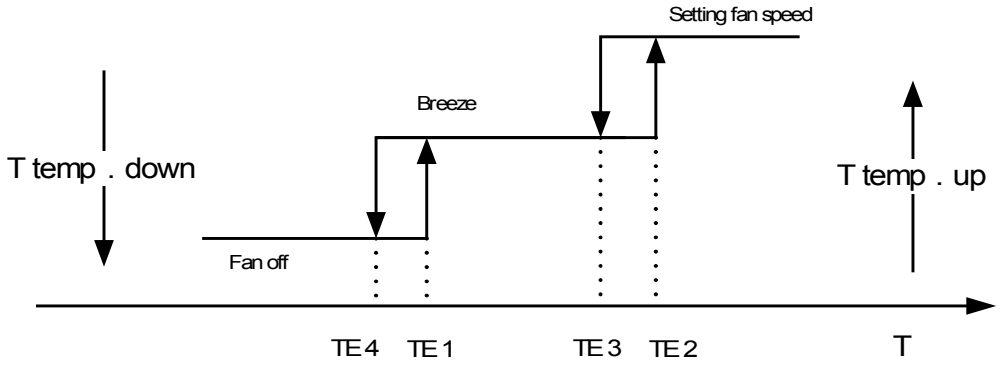

9.7.5 Auto wind at heating mode (T=indoor temp.)

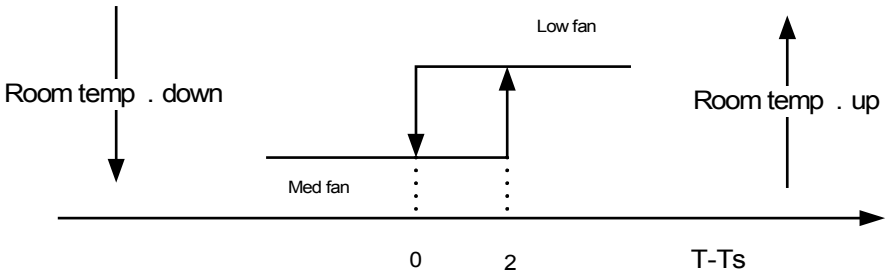

9.7.6 Indoor evaporator high-temperature protection at heating mode (T=indoor exchanger temp.)

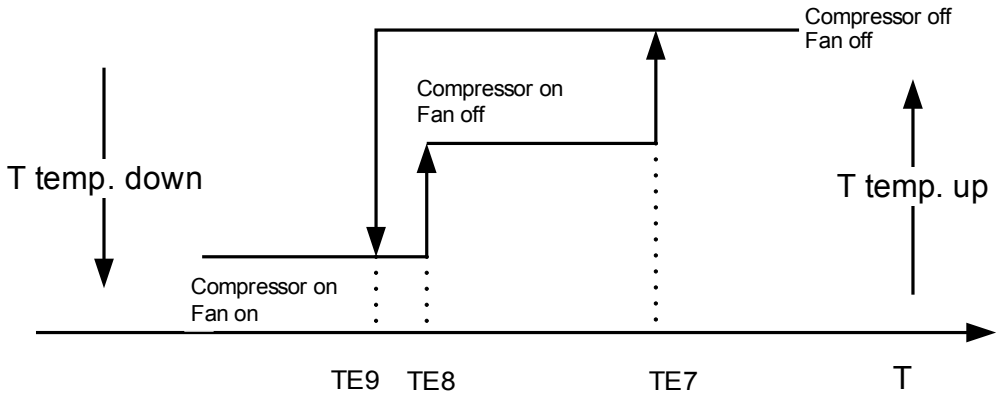

9.7.7 The louver opens to Standard Angle ANGLHEAT when power is on for the first time.

9.8 Defrosting mode (available for heating mode)

9.8.1 Defrosting condition: Defrosting starts when either of the following ①&②:

① A and B are satisfied:

A: The compressor keeps running for 42 minutes or more.

B: The temperature difference of evaporator and room temperature meets one of the following:

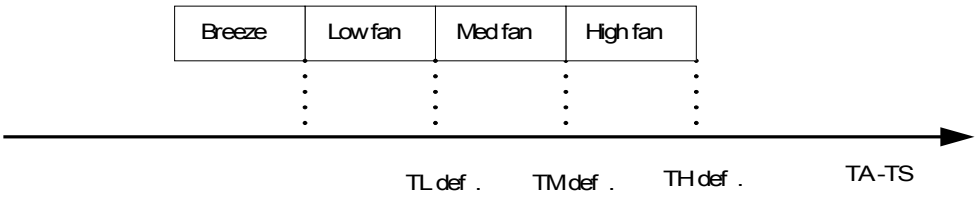

② Calculate from the end of latest defrost, evaporator high temp. Protection only closes outdoor fan with the compressor still running. Add up to 90 minutes.

9.8.2 Defrosting time

At condition ①, If item B is satisfied before item A, it would be regarded as severe frosting and the defrosting time is 10 minutes. If item B is satisfied after item A, the defrosting time is 7.5minutes.

At condition ②, the defrosting time is 10 minutes.

After three times continuous 7.5-minute defrost, the fourth defrost time should be 10 minutes.

The circulation is as following:

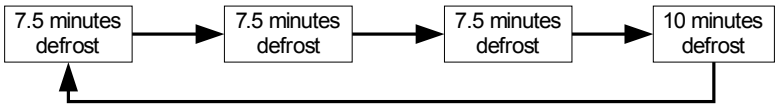

9.8.3 Ending condition of defrosting

If one of following conditions is satisfied, end the defrost and turn into heating mode:

A. The defrost time has reached to 7.5 or 10 minutes.

B. The compressor current has reached to $I_{DEFROST}$ or above, I_{DEROST} differs in different models

9.8.4 Defrosting Actions

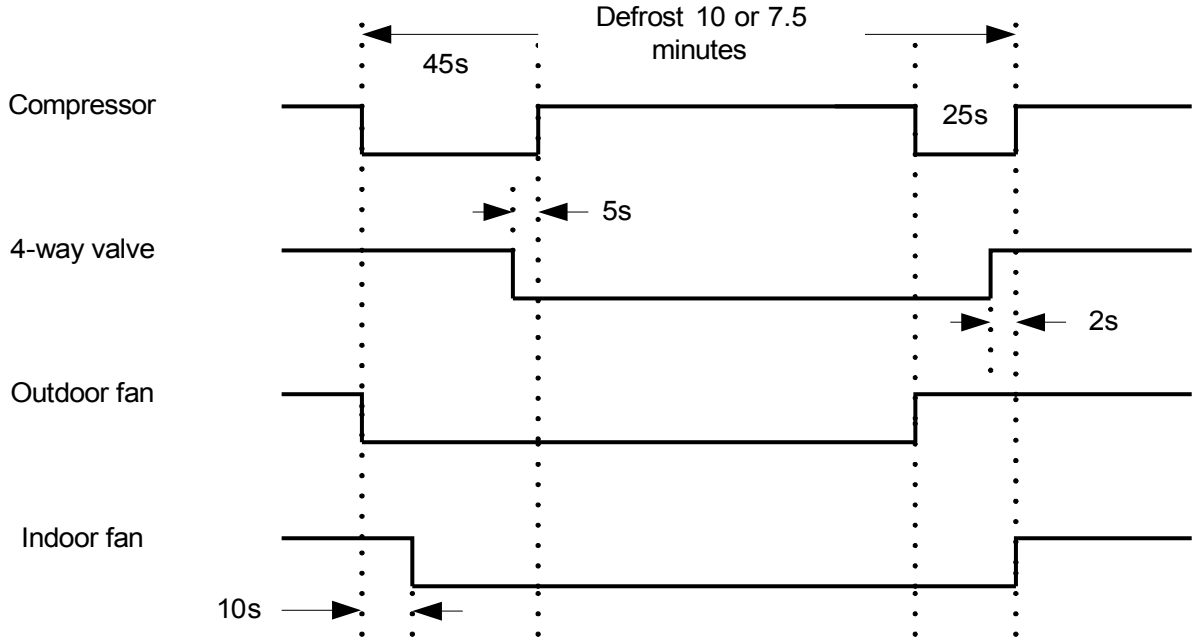

9.9 Auto mode

9.9.1 The air conditioner automatically selects one of the following operation modes: cooling, heating or fan only according to the temperature difference between room temperature (TA) and set temperature (TS).

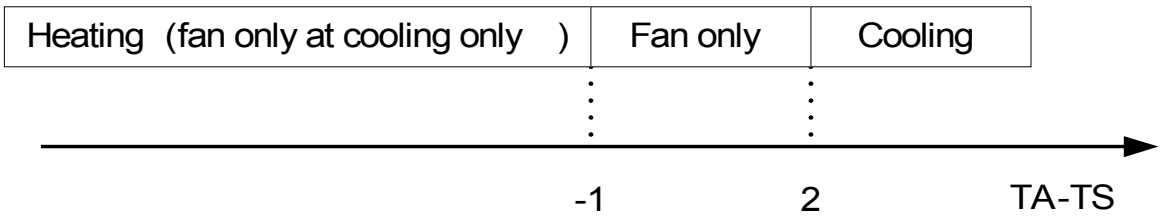

9.9.2 The indoor fan blows automatically in corresponding selected mode

9.9.3 The motion of indoor fan's blade should accord with the selected operation mode

9.9.4 One mode should be carried out for at least 15 minutes once selected. If the compressor cannot start for 15 minutes, reselect the operation mode according to the room temp. And set temp., or reselect when the set temp. varies

9.10 Force cooling function

9.10.1 Select forced cooling function with the forced cooling button or the switch

9.10.2 The compressor is unconditionally turned on, after 30 minutes cooling operation whose fan mode is set as low, the A/C operates at the DRY mode with a set temp. of 24□

9.10.3 All protections of remote control cooling are available at forced cooling operation

9.10.4 Forced Auto function

Select forced auto function with the forced auto button or the switch.

In forced auto status the A/C operates at remote control mode with a set temp. of 24□

9.11 Sleep mode

9.11.1The sleep function is available at cooling, heating or auto mode

9.11.2 Cooling:

The set temperature rise 1□per hour. Two hours later, the set temperature will maintain as a constant and the fan speed is kept at low speed.

The total time is 7 hours, after 7 hours the unit stops

9.11.3 Heating:

The set temperature decrease 1□per hour. Two hours later, the set temperature will maintain as a constant and the air circulation is kept at low speed (Anti-cold function takes precedence over all).

The total time is 7 hours, after 7 hours the unit stops

9.11.4 Auto:

After an hour running under economic mode, the set temp will rise 1□if it is under cooling mode; the set temp will decrease 1□if it is under heating mode; the set temp will be changeless, if it is under fan-only mode; the condition will be the same after the air conditioner running under economic mode after 2 hours, and during the next time the set temp do not change. The total time is 7 hours, after 7 hours the unit stops.

9.12 Auto restart function

In case of a sudden power failure, this function automatically sets the unit to previous settings before the power failure when power returns

9.13 Turbo mode

In cooling mode, when pressing the turbo button on the remote controller, the unit will enter turbo mode with ultra-high speed and reach the set temperature more quickly. After running 20 minutes in turbo mode, the indoor fan will automatically recover the preset speed.

9.14 PLASMA (optional):

Be controlled by control remoter.

9.15 Ionizer (optional)

Be controlled by control remoter.

9.15 FP function (optional)

Be controlled by control remoter. Under FP function, the unit runs in heating mode with 8□ setting temperature. Once the compressor starts, it should be running for at least 7 minutes, and then the unit will switch on or off due to the actual ambient temp. If the ambient temp is reached 8□ or higher, the unit will be off; if the ambient temp is lower than 8□, the unit will keep running. In FP mode, the indoor fan has the same control logic as the compressor and there is no anti-cold air flow function. Once the indoor fan starts, it will always run at high speed.

	MS9V1i-07HRN1-QC2	MS9V1i-09HRN1-QC2	MS9V1i-12HRN1-QC2	MS9V1i-18HRN1-QC0
I3SEC	7.5A	10.0A	12A	17.0A
I5MIN	6.5A	7.5A	10.5A	15.0A
IFAN	5.5A	6.5A	9.5A	14.0A
IRESTORE	4.5A	5.0A	8A	12A
IDEFROST	3.0A	3.5A	5.0A	8.5A
TE1	28□	28□	28□	34□
TE2	32□	32□	32□	37□
TE3	30□	30□	30□	30□
TE4	26□	26□	26□	20□
TE5	4□	4□	4□	3□
TE6	10□	10□	10□	12□
TE7	60□	60□	60□	63□
TE8	53□	53□	53□	53□
TE9	50□	50□	52□	52□
$TH_{DEFROST}$	14□	15□	15□	17□
$TM_{DEFROST}$	15□	16□	16□	18□
$TL_{DEFROST}$	16□	17□	17□	19□
PDELAYC	127SEC	127SEC	127SEC	127SEC

10. Troubleshooting

10.1 Display board

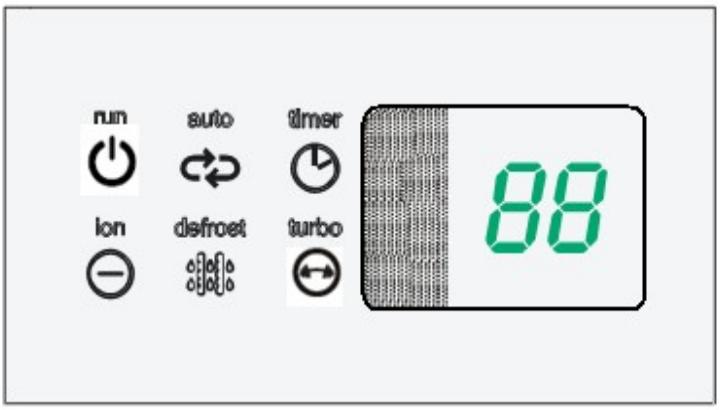

OPERATION indication lamp
This lamp illuminates when the air conditioner is in operation.

AUTO indication lamp
Lights up during the Auto operation.

TIMER indication lamp
Lights up during Timer operation.

Ion indication lamp(optional function)
Lights up when Clean Air feature is activated and Ionizer can generate abundant anions to fill the room with refreshing and natural air.

DEFROST indication lamp
(For cooling & heating models only):
Lights up when the air conditioner starts defrosting automatically or when the warm air control feature is activated in heating operation.

TURBO indication lamp
Lights up only when select TURBO function on cooling operation or on Auto cooling operation.

10.2 Troubleshooting

Display	STATUS
E1	EEPROM error
E2	Zero-crossing examination error
E3	Fan speed beyond control
E5	Open or short circuit of Room temperature sensor
E6	evaporator temperature sensor open or short circuit of

10.3 Diagnostic chart

After energizing, no indicator is lighted and the air conditioner can't be operated.

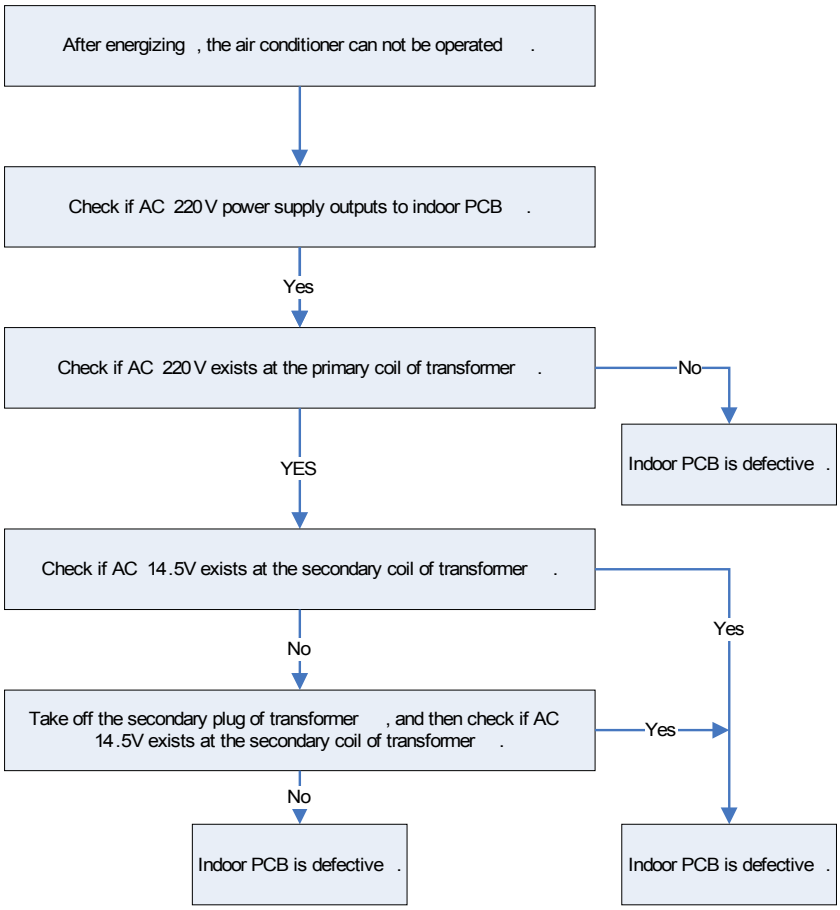

10.4 Resetting phenomenon often occurs during operation.

(That is automatically entering to the status when power is on.)

The reason is that the instantaneous voltage of main chip is less than 4.5V. Check according to the

following procedure:

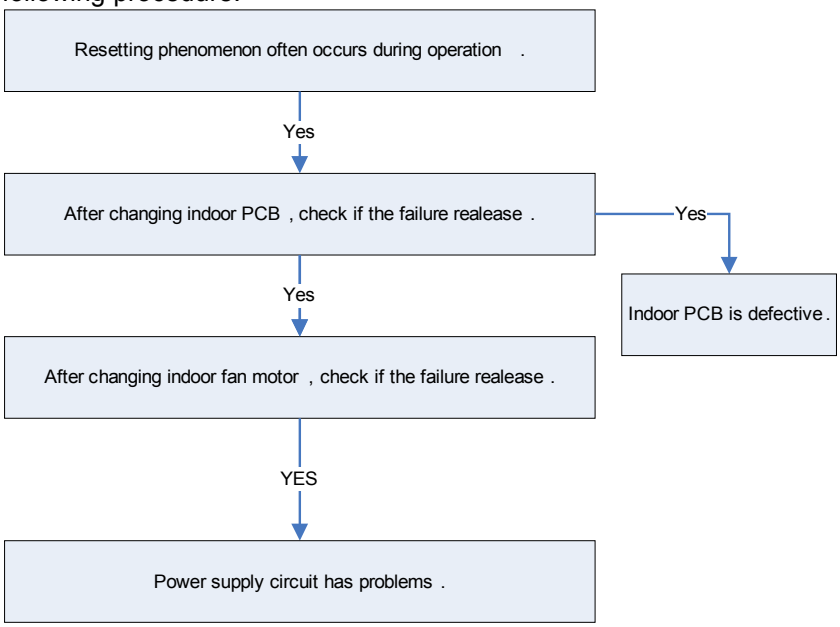

10.5 E3 error display

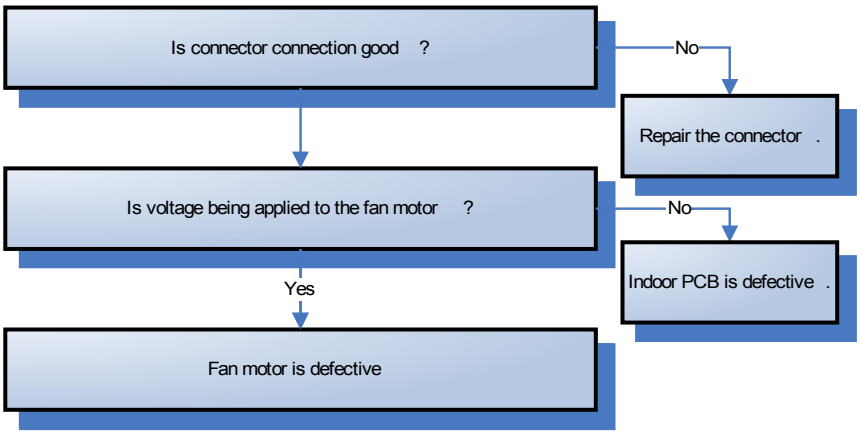

10.6 E5 or E6 error display

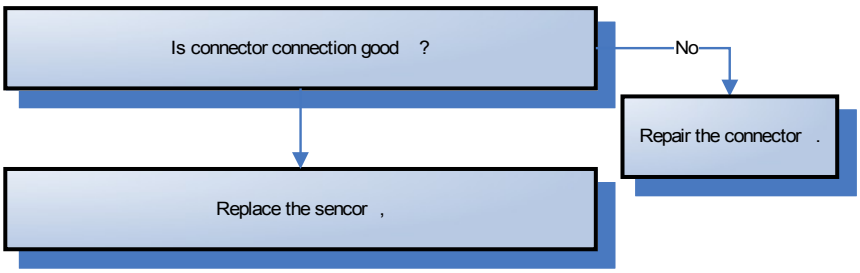

10.7 E1 error display

EEROM error, indoor PCB is defective.

10.8 E2 error display

This is alarm signal when the main chip can't detect over-zero signal. When such failure occurs, the main control board must have fault.

11. Characteristic of temperature sensor

Temp.□	Resistance KΩ	Temp.□	Resistance KΩ	Temp.□	Resistance KΩ
-10	62.2756	17	14.6181	44	4.3874
-9	58.7079	18	13.918	45	4.2126
-8	56.3694	19	13.2631	46	4.0459
-7	52.2438	20	12.6431	47	3.8867
-6	49.3161	21	12.0561	48	3.7348
-5	46.5725	22	11.5	49	3.5896
-4	44	23	10.9731	50	3.451
-3	41.5878	24	10.4736	51	3.3185
-2	39.8239	25	10	52	3.1918
-1	37.1988	26	9.5507	53	3.0707
0	35.2024	27	9.1245	54	2.959
1	33.3269	28	8.7198	55	2.8442
2	31.5635	29	8.3357	56	2.7382
3	29.9058	30	7.9708	57	2.6368
4	28.3459	31	7.6241	58	2.5397
5	26.8778	32	7.2946	59	2.4468
6	25.4954	33	6.9814	60	2.3577
7	24.1932	34	6.6835	61	2.2725
8	22.5662	35	6.4002	62	2.1907
9	21.8094	36	6.1306	63	2.1124
10	20.7184	37	5.8736	64	2.0373
11	19.6891	38	5.6296	65	1.9653
12	18.7177	39	5.3969	66	1.8963
13	17.8005	40	5.1752	67	1.830
14	16.9341	41	4.9639	68	1.7665
15	16.1156	42	4.7625	69	1.7055
16	15.3418	43	4.5705	70	1.6469