Библиотека СОК

Evolution Line

KKT chillers

GB

Original operating manual

eBoxX 260
eBoxX 300
eBoxX 350
eBoxX 400
eBoxX 490
eBoxX 530

Table 1: Contact details

Sales and project planning	ait-deutschland GmbH Industriestraße 3 95359 Kasendorf Germany T +49 9228 9977 0 F +49 9228 9977 149 E info@kkt-chillers.com W www.kkt-chillers.com
Service	ait-deutschland GmbH Industriestraße 3 95359 Kasendorf Germany T +49 9228 9977 7190 F +49 9228 9977 7474 E service@kkt-chillers.com W www.kkt-chillers.com 24/7 Customer Support
Service USA	KKT chillers, Inc. 765 Dillon Drive Wood Dale IL 60191 T +1 847 734 1600 F +1 847 734 1601 TF +1 866 517 6867 E support@kkt-chillersusa.com 24/7 Customer Support
Service China	KKT chillers East Asia Sales and Service Office No. 108, Xinglin Street SIP Suzhou 215026 Jiangsu, P.R. China T: +86 512 6790 3091 F: +86 512 6287 1077 M: +86 400 928 9655 E: service@kkt-chillerscn.com W: www.kkt-chillers.com

Introduction

These operating manual have been drawn up by KKT chillers on the basis of the Machinery Directive 2006/42/EC. They contain all important information and instructions for the installation and safe operation of the chiller. It also contains suggestions on how to prevent or correct faults.
Please take enough time to carefully read this instruction manual and to process all the information that it contains. For further questions, please contact the KKT chillers Service Team by means of the aforementioned contact details.

If properly used for its intended use and correctly maintained, the chiller ensures sustained, fault-free operation. The methods and procedures described in this manual were designed to help you identify problems at an early state and to initiate corresponding countermeasures.
By observing the described maintenance program, you ensure that the reliability and safety of the machine is maintained. Plus this keeps operating costs low and increases the service life of the components.

To ensure that the performance of your chiller is not impaired, we recommend that you only use original spare parts from KKT chillers. By doing so, you ensure the reliability and quality of the machine.

	ATTENTION! An exclamation mark in a triangle indicates important information and instructions to which you must pay particular attention and must always follow.

KKT chillers reserves the right to change technical data without prior announcement. Illustrations in this document are not set to scale!

As the devices of the Evolution Line can be adapted project specifically, this document contains only information that is of general relevance for all devices of the series.

All project-specific data is enclosed with the unit in separate summary documentation.

- P&I diagram
- Circuit diagram
- All other project-specific details

Contents

Introduction 3
1. Product description 8
1.1. Intended use 8
1.2. Explanation of terms 9
2. Function and main components 9
2.1. Compressor 9
2.2. Evaporator 10
2.3. Condenser 10
2.4. Expansion valve 10
2.5. Refrigerant 10
2.6. Oil 10
2.7. Filter dryer 11
2.8. Pressure and temperature sensors 11
2.9. Control unit 11
2.10. Display 11
2.11. Control cabinet 11
2.12. Fan 11
2.13. Cold water circuit 11
2.14. PED categories of pressurized components 11
2.15. Materials used in the water circuit 12
2.16. Water quality 13
2.17. Permitted coolant media 13
3. Technical data 15
3.1. Technical data standard device 15
3.2. Hydraulic module (option) 16
3.3. Min./max. Ambient temperatures 16
4. Standard configuration 17
4.1. Speed-controlled fans 17
4.2. Soundproof compressor housing 17
4.3. Machine housing protection 17
4.4. Condenser protection grille 18
4.5. Electronic expansion valve 18
4.6. Control cabinet heating 18
4.7. Minimum / maximum voltage control unit 18
4.8. Modbus interface 18
5. Options and accessories 19
5.1. Version with integrated hydraulic module 19
5.2. Micro-channel condenser 20
5.3. Accessories for height-adjustable spring antivibration mountings 23
5.4. Container shipping accessories 23
6. Safety 24
6.1. General information 24
6.2. Hazard warnings 25
6.3. Residual energy 26
6.4. Safety devices, guards and safeguards 27
6.5. Personal protective equipment when operating the machine 29
6.6. Personal protective equipment for servicing work 29
6.7. Residual risks 30
6.7.1. Electrical 30
6.7.2. Mechanical 30
6.7.3. Chemical 30
6.7.4. Other 30

6.8. Dangerous substances 31
6.8.1. Refrigerant R410A 31
6.8.2. Polyester oil 31
6.9. Reasonably foreseeable misuse 32
6.10. Information for emergencies 33
7. Noise emission 34
7.1. Sound power and sound pressure level 34
7.2. Notes on reducing noise and vibration 34
7.2.1. Noise 34
7.2.2. Vibration 34
8. Handling and storage 34
8.1. Dangerous goods 35
8.2. Transport 35
8.2.1. Transport eBoxX 260 – eBoxX 300 36
8.2.2. Transport eBoxX 350 – eBoxX 530 37
8.3. Unpacking 38
8.4. Storage 38
9. Installation 39
9.1. Overview 39
9.2. Weight distribution 39
9.3. Installation site 40
9.3.1. General information 40
9.3.2. Minimum room volume 41
9.3.3. Ambient temperature 41
9.3.4. Effect of surrounding air flow 41
9.3.5. Minimum clearances 42
9.3.6. Surface and foundation 42
9.3.7. Stability 43
9.3.8. Vibration isolation 43
9.3.9. Installation 43
9.3.10. Hydraulic installation 43
9.3.11. Frost protection measures 44
9.3.12. Flushing the cold water circuit 44
9.3.13. Filling 44
9.3.14. Venting 44
9.3.15. Electrical installation 44
10. Commissioning 45
10.1. Start the procedure 46
10.1.1. General condition of the unit 47
10.1.2. Checking the oil level of the compressor 48
10.1.3. Checking the water connections 49
10.1.4. Electrical connections 50
10.2. Initial commissioning 51
10.3. Checking while the machine is running 52
11. Operation 53
11.1. Switching on / off 53
11.2. Control panel / User interface 54
11.3. Status after switching on and off 55
11.4. Status of refrigeration circuits 56
11.5. Menu navigation 56
11.6. Main menu 57
11.7. Setpoint value menu 58
11.7.1. Function AF+ 58
11.7.2. Setpoint compensation 59

11.8. Limitations menu 59
11.8.1. FDL = Power reduction 60
11.8.2. FNR = Noise reduction 60
11.9. Inputs / outputs menu 62
11.10. Data memory menu 62
11.11. Info menu 63
11.12. Menu Language selection 64
11.13. Operating hours menu 65
11.14. Menu Config GLT 65
11.15. Alarm display 67
11.16. Menu controller settings 70
11.16.1. Setting the hour counter 71
11.16.2. Sensor calibration menu 72
11.16.3. Control / thermoregulation 72
11.16.3.1. Control of the outlet temperature 73
11.16.3.2. Compressor times menu 75
11.16.3.3. Maximum outlet temperature menu 75
11.16.3.4. Pump Down 76
11.16.3.5. Tank heater setting menu (only with integrated hydraulic module option) 76
11.16.4. Setpoint limits menu 77
11.16.5. Menu pumps / primary pump (optional hydraulic module) 78
11.16.6. Condensation control menu 79
11.16.7. Prevention menu 80
11.16.7.1. High pressure prevention 81
11.16.7.2. Low pressure prevention 81
11.16.7.3. Prevention anti-freeze mixture 82
11.16.7.4. Prevention power consumption 82
11.16.8. Alarms menu 82
11.16.8.1. Low pressure alarm 83
11.16.8.2. High pressure alarm 84
11.16.8.3. Alarm for anti-freeze mixture 84
11.16.8.4. Coolant media alarm / application limits 85
11.16.8.5. Low condensing pressure alarm 86
11.16.8.6. Alarm for low outdoor temperature 86
11.16.8.7. Alarm offline 87
11.16.8.8. LowSH/LOP/MOP alarms 87
11.16.9. EEV menu - Electronic expansion valve 88
11.16.10. Default settings / Factory reset menu 91
11.16.11. Manual mode menu 92
12. Hardware – Configuration 94
12.1. Description of the card / circuit board 94
12.2. Configuration of inputs and outputs for eBoxX260 to eBoxX300 95
12.3. Configuration of inputs and outputs for eBoxX350 to eBoxX530 96
13. Maintenance 98
14. Cleaning and general inspection of the device 100
14.1. Condenser 100
14.2. Condenser with ElecroFin® coating (option) 100
14.3. Cleaning the fans 102
14.4. Checking the oil level in the compressor 103
14.5. Water filter (external if present) 103
14.6. Complete cleaning of the cold water circuit 103
15. Service 103
15.1. Repair and replacement of components 103
15.2. Spare parts 104

16. Decommissioning/Taking out of service 104
17. Recycling 104
18. Products, solutions and services 104
19. Lists 105
19.1. List of illustrations 105
19.2. List of tables 107

1. Product description

Please read all the points in these operating manual before starting up the machine. You should pay particular attention to the points on safety, commissioning/start-up and operation. Should you have any further questions concerning your machine, please contact the KKT chillers Service Team (*see Contact details*).

	ATTENTION! The unit is designed exclusively for operation as a chiller with air-cooled condensation. Any other use is expressly PROHIBITED. Installation of the unit in a potentially explosive atmosphere is strictly prohibited.
	ATTENTION! The machine is suitable for indoor and outdoor installation. If the machine is installed in a place accessible to persons under the age of 14, it must be secured with a lock.

1.1. Intended use

The eBoxX is a factory-tested, fully automatic compression chiller. The machine is used exclusively for cooling liquids in accordance with EN378-1. A sufficient supply of cooling air must be provided. Only approved liquids may be used. The components of the eBoxX, including the switch box, meet protection class IP54. The unit is suitable for both indoor and outdoor installation (note the proportion of antifreeze mixture).

The operator is responsible for complying with the specified operating, servicing and maintenance conditions according to these operating manual.
The owner of the chiller, not the manufacturer, is responsible and liable for all personal injuries and damage to property caused by improper use of the unit (misuse).

Table 2 contains the general safety instructions of the chiller. These instructions are attached to the machine in a clear and readily visible position. A complete description of all hazard warnings can be found in Chapter *6.2* **Hazard warnings.**

Table 2: Safety instructions

	Note and follow the instructions for use!
	Before opening the machine, it must be disconnected from the power supply and secured against being switched on again! The machine may only be opened 5 minutes after it has been disconnected from the power supply.
	Beware of dangerous electrical voltage! If the machine is only turned off by means of the main switch, some of the terminals in the control cabinet will still be under dangerous voltage.

1.2. Explanation of terms

For the sake of better understanding, we have listed some relevant terms that are used frequently in this document.

Table 3: Explanation of terms

Term	Explanation
Application	The source of heat hydraulically connected to the chiller.
Process circuit	Application and piping to the chiller.
Cold water circuit	Process circuit and chiller in hydraulic piping.
Cold water	Refrigerant in cold water circuit.
Cooling air	Heat absorbing ambient air drawn through the machine.
Net weight	Machine ready for operation without cooling water.
Gross weight	Machine ready for operation with cooling water.

2. Function and main components

The chiller consists of the main components compressor, condenser, expansion valve, evaporator, which are arranged in a circuit (*Illustration 1*). Refrigerant circulates in this circuit. In the evaporator, it absorbs heat from the cold water and emits it in the condenser into the drawn in air.

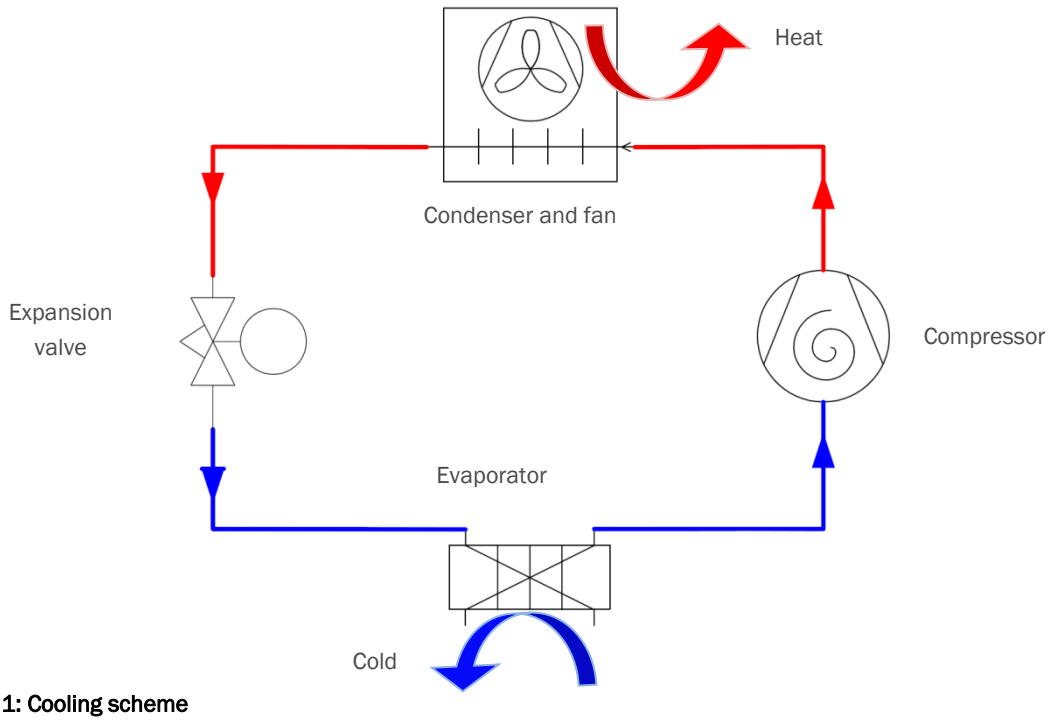

Figure 1: Cooling scheme

Various pressure and temperature sensors, a control unit, a high-pressure switch, a pump (see chapter 5.1) for the hydraulic module option) and several fans are also installed for controlling and operating the chiller.

2.1. Compressor

The compressor generates the needed pressure difference for evaporation and condensation between heat sink and heat source in the refrigerant circuit. Vaporised refrigerant coming from the evaporator is drawn in and compressed in the compressor to the condensing pressure.

The compressors used work on the basis of the scroll principle. Scroll compressors are maintenance-free, quiet and have a very high degree of efficiency.

The flow temperature is controlled by switching one or more compressors on and off. Sequential changeover ensures that all compressors are loaded uniformly.

2.2. Evaporator

The evaporator is a plate heat exchanger that transfer heat from the cold water to the refrigerant. In order for the transfer of heat to take place, the refrigerant in the evaporator must have a lower temperature than the cold water and changes its physical state upon heat absorption from liquid to gaseous.
If the cold water is polluted, deposits can accumulate on the transfer surfaces of the evaporator. This impairs the transfer of heat to the refrigerant and has negative effects on the refrigerating capacity of the machine. Therefore always make sure to use the prescribed water quality and do not make use of any other additives than prescribed.

2.3. Condenser

The condenser is a microchannel heat exchanger that transfers heat from the refrigerant to the ambient air. In order for the transfer of heat to take place, the refrigerant in the condenser must have a higher temperature than the drawn-in ambient air changes its physical state upon heat dissipation from gaseous to liquid.
Contaminated cooling air can cause deposits to accumulate on the condenser surface. This impairs the transfer of the heat to the refrigerant. This limits the machine's operating limits and reduces the cooling capacity/energy efficiency of the machine. For this reason, always ensure a clean surface for transmission and clean the condenser in accordance with the respective kind of contamination. If you have any questions about cleaning, please contact the KKT chillers Service Team (*see: Contact Data*).

2.4. Expansion valve

The expansion valve regulates the admission of liquid refrigerant to the evaporator and restricts the pressure of the refrigerant before entering the evaporator. In this process, the refrigerant cools down to the evaporating temperature.
The expansion valve used in the machine is regulated electronically. The electronic regulation ensures that the evaporator is constantly optimally supplied with refrigerant. This improves the efficiency of the system and reduces pressure fluctuations in the refrigeration circuit.

2.5. Refrigerant

The refrigerant R410A circulates in the refrigeration circuit. It "transports" the heat from the evaporator the the condenser and continuously changes its physical state in doing so.
R410A is a fluorinated greenhouse gas consisting of the zeotropic mixture of 50% R32 and 50% R125 with virtually negligible temperature glide. R410A has a very high volumetric cooling capacity and has no ozone depletion potential (ODP=0). A corresponding safety data sheet can be requested from our KKT chillers Service Team (*see: Contact Data*).

2.6. Oil

The compressor components subject to friction are lubricated by oil that is added to the refrigerant at the factory. The oil is soluble in the refrigerant and distributes itself with it throughout the entire refrigeration circuit.

2.7. Filter dryer

The task of the filter dryer is to absorb any contamination or moisture from the cooling circuit. Both refrigerant and oil are hygroscopic. When installing the refrigeration circuit, the oil may absorb moisture. This moisture can lead to corrosion and impair the cooling process. The filter dryer bonds this moisture and also has a mechanical filter effect. If work is carried out on the refrigeration circuit during which it is opened, the component must be replaced.

2.8. Pressure and temperature sensors

The sensors used continuously record the temperature or pressure at various points in the refrigerant or cold water circuit. The values are used for visualisation and for controlling the system.

2.9. Control unit

The control unit is a control that is programmed at the factory. This is where all system-technical measurement values and information come together. In addition, the electrical components are controlled via algorithms.

2.10. Display

The display is used to visualise the necessary information and processes of the system for the user. Plus, it can be used to make entries. The display communicates with the control unit.

2.11. Control cabinet

The control cabinet complies with the applicable IEC standards and contains the electrical and electronic components for controlling the chiller. The control cabinet can be opened via the front panel with a special tool (commercially available double-bit key).

2.12. Fan

The fan draws in the cooling air from the environment via the condenser and discharges the heated air upward from the chiller. In order to prevent injuries, the fan is protected against unintentional contact by means of a protective grille. The fan speed is variable and is essentially determined by the condensing pressure.

2.13. Cold water circuit

The cold water is conveyed through the internal piping via the evaporator of the chiller. Optionally, an integrated hydraulic module consisting of a stainless steel tank, pump and diaphragm expansion vessel can be designed as a closed system. In the process circuit, the cold water absorbs heat. The circuit closes when the cold water is conveyed back into the chiller.

2.14. PED categories of pressurized components

List of critical pressurized components (Directive 2014/68/UE):

Table 4: PED category

Component	PED category
Compressor	II
Safety valves	IV
High-pressure pressure switch	IV
Microchannel	I
Plate evaporator	II

2.15. Materials used in the water circuit

In the standard version, the material compilation is depicted as shown in Table 5 :

Table 5: Materials used

Component	Material
Unit connections	V2A 1.4305
Evaporator	V2A 1.4301 and copper (99.9%)
Water piping	V2A 1.4301
Bends, tees, couplings	V2A 1.4301
Temperature sensor	V2A 1.4301
Pressure sensor	V2A 1.4301
with optional hydraulic module	
Tank	V2A 1.4301
Pump Mechanical seal	Grey cast iron and V2A 1.4301 EPDM
Bypass valve	Gunmetal
Tank heater	Nickel-chromium-iron alloy Alloy 825

2.16. Water quality

The following limit values must be adhered to to ensure the safe operation of the devices:

Table 6: Water quality

Property / Constituents	Unit	Value range
pH-value (20°C)	-	7.5 - 9
Saturation index	-	-0.2 < 0 < +0.2
Conductivity	µS/cm	80-500
Water hardness	°dH	4 - 8.5
Carbonate hardness	mol/m³	<0.5
Total germ count	K/ml	<10,000
Grain size	µm	< 250
Glycol fraction (AFN / AFL)	Vol%	25 - 40
Oil fraction	Vol%	0
Chloride(Cl-)	mg/l	<50
Sulphate	mg/l	<50
Nitrate	mg/l	<100
Copper	mg/l	<0.1
Iron	mg/l	<0.2
Free carbonic acid	mg/l	<20
Manganese	mg/l	<0.05
Ammonia	mg/l	<0.5
Free chloride	mg/l	<0.5
Sulphide	mg/l	<0.03

To prevent clogging of the plate heat exchangers, the prescribed limit values must be observed.

Furthermore, any occurrence of mucilage bacteria in the cooling water must be ruled out.

2.17. Permitted coolant media

Water and mixtures of water/Antifrogen N (AFN) or water/Antifrogen L (AFL) are permitted according to the information in chapter 2.16 Water quality

⚠	**ATTENTION! Do not use mixtures of different anti-freeze products. This can lead to undesired chemical reactions as well as silting.**
⚠	**ATTENTION! The AFN or AFL fraction in a water/glycol mixture must therefore not be less than 25 % by volume. Below this concentration, microorganisms may grow in the refrigerant and lead to organic deposits.**
⚠	**ATTENTION! Galvanised pipes are not permitted, since all glycol-water mixtures can dissolve zinc.**

Please note that Antifrogen N and Antifrogen L should always be diluted with water. In addition, glycol-water mixtures may only be used without the addition of inhibitors due to their corrosion-promoting properties, which are stronger than those of water alone.

For further information and data sheets on glycol, please visit the manufacturer's website http://www.clariant.com and http://www.antifrogen.de. Also feel free to contact our KKT chillers team (see ***contact details***).

3. Technical data

3.1. Technical data standard device

Table 7: Technical data

KKT chiller type	eBoxX	260	300	350	400	490	530
Cooling capacity[1)]	kW	260	292	348	395	489	528
Refrigerant	-	R410A					
Coolant media	-	Water or water/glycol 34%					
Refrigerant filling quantity total	kg	20.5	22.5	19	23	32	32
Refrigerant GWP	-	2088	2088	2088	2088	2088	2088
CO2 equivalent	t / kg	42.9	47	39.7	48.1	66.9	66.9
Total polyester oil filling quantity	kg	13.3	13.3	10.6	20.8	21	21
Flow temperature	°C	5 - 20					
Setpoint potential:	K	± 2.5					
Nominal volume flow	m^3/h	44	50	60	68	84.5	91
Internal pressure loss, approx.	bar	0.65	0.7	0.65	0.77	0.63	0.73
Air flow rate	m^3/h	46,500	62,000	79,500	79,500	119,500	119,500
Sound pressure level[2)]	dB(A)	58	58	58	60	61	62
Ambient temperature max.	°C	45					
Ambient temperature min.	°C	-15					
Nominal water width	DN	80	80	80	100	100	100
Operating voltage	V/Ph/Hz	400 / 3~ / 50					
Power consumption, approx.[3)]	kW	65.7	73.1	79.7	102.1	108.2	125.1
Current consumption, approx.[3)]	A	152	166	198	239	250	280
Protection class switch cabinet	-	IP 54					
Length	mm	3,594	4,544	2,526		3,626	
Width	mm	1,350		2,260			
Height	mm	2,440		2,453			
Weight (net)	kg	1,510	1,670	1,700	2,050	2,550	2,565

1. Cooling capacity at water supply temperature tw2 = 20°C; ambient temperature tu = 32°C; without consideration of pump capacity losses; 400V/3~/50Hz
   Deviations in performance possible according to DIN14511
2. Sound pressure is calculated using the enveloping surface method according to EN 13487, 10m distance from the switch cabinet side, without reflection.
3. At operating point see 1)

3.2. Hydraulic module (option)

Table 8: Optional hydraulic module

KKT chiller type	eBoxX	260	300	350	400	490	530
Pump type	-	Grundfos NB					
Pump type	-	97839225 NB 40-250/245 AF2ABAQE 50 Hz			96125030 NB 50-250/254 AF2ABAQE 50 Hz		
free pump pressure max.	bar	6.00					
Power consumption pump	kW	18.5	18.5	30	30	30	30
Tank content	l	450	450	500	500	700	700
Weight additional (net)	kg	520	520	680	680	810	810
Weight in total (net)	kg	2,030	2,190	2,380	2,730	3,360	3,375

3.3. Min./max. Ambient temperatures

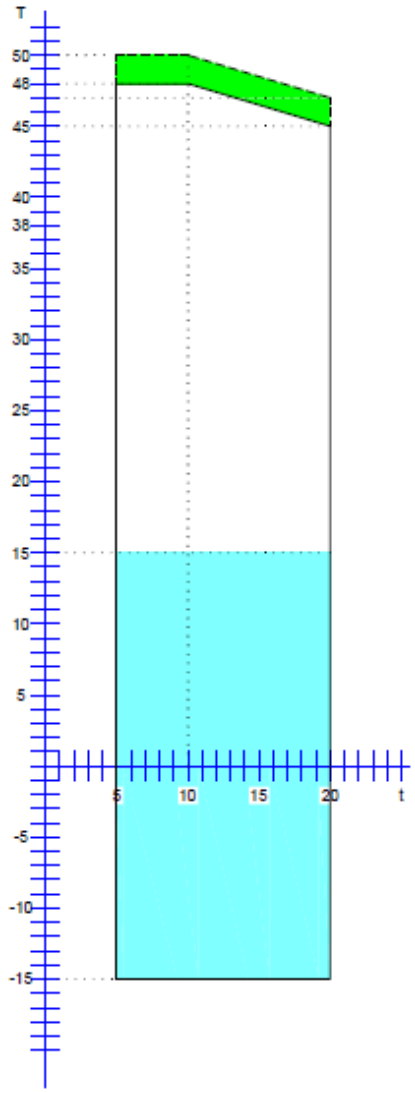

Figure 2: Limits of use

T = Ambient temperature in °C

t = Coolant outlet temperature in °C

green (upper range) = partial load operation of the compressors (compressor switch-off)

white / blue (middle and lower area) = standard

4. Standard configuration

The chiller is available in the standard version as a continuous cooler without tank and without integrated pump. This makes it possible to design an integrated system consisting of an external tank pump station or pump station or heat exchanger station with the chiller. Of course, the chiller can also be integrated into an existing cold water system.

The following special features are already incorporated in the standard version:

4.1. Speed-controlled fans

These are speed-controlled fans with EC motor. Advantages are optimised partial load behaviour, noise reduction and energy savings compared to conventional fans without speed control.

Table 9: Number of fans

Cold water type	eBoxX 260	eBoxX 300	eBoxX 350	eBoxX 400	eBoxX 490	eBoxX 530
Number of fans	3	4	4	4	6	6

4.2. Soundproof compressor housing

This is a soundproof enclosure of the compressors as standard. In addition to noise reduction, further benefits are the protection of the components.

4.3. Machine housing protection

The machine room for the chillers is the lower part of the system (beneath the condenser). It houses the refrigeration circuit with compressor, evaporator, expansion valve and the complete hydraulic system.

For the eBoxX 260 to eBoxX 300 units, in addition to the compressor housing installed as standard, the other complete machine room is also fitted with RAL 9018 sheet metal. This provides protection against external intrusion and serves to reduce noise. For this, see Figure 3: Display eBoxX 260 on page 18.

For the devices eBoxX 350 to eBoxX 530, the lower machine room is protected against penetration by a protective grid. For this, see Figure 4: Display eBoxX 350 on page 18.

4.4. Condenser protection grille

Only available for eBoxX 350 to eBoxX 530. These are standard side panels in RAL 9018 with aesthetic function and to protect the condenser against rough external influences.

Figure 3: Display eBoxX 260

Figure 4: Display eBoxX 350

4.5. Electronic expansion valve

This is a standard electronic expansion valve fused to maintain optimum cooling performance under partial load conditions.

4.6. Control cabinet heating

Standard built-in heater for the control box to maintain a minimum internal control cabinet temperature.

4.7. Minimum / maximum voltage control unit

This is a control unit for the minimum and maximum supply voltage which is installed as standard in the control box.

4.8. Modbus interface

This is an RS485 interface built into the control box as standard for serial data exchange with other devices (Modbus TCP protocol). Should you have any further questions, please contact the KKT chillers Service Team (*see Contact details*).

5. Options and accessories

The chiller can be equipped in the factory with the options described in the following.

The positions marked with "Accessories" are supplied separately and can be reordered at any time. The installation of the accessory is the responsibility of the installer of the machine. You can also ask our KKT chillers Service Team to arrange for this installation (see *Contact details*).

5.1. Version with integrated hydraulic module

The devices of the Evolution Line are optionally also available with a hydraulic module. These consist of an integrated stainless steel tank, an integrated tank heater, a frequency-controlled pump that can be shut off on both the pressure and suction sides, as well as a diaphragm expansion vessel (MAG), vent and safety valve for atmospherically closed systems. In addition, a bypass valve is provided between the flow and return lines for fine adjustment of the required refrigerant volume flow.

Note:
The integrated MAG is designed so that it can only hold the water of the chiller. Any additional expansion tank for the total volume of the system must be calculated accordingly by the installer and provided by the customer.

The pump is factory-set to the required pump pressure on the external frequency inverter. If other pressures are required during installation, they can of course be readjusted. You can also request this installation from our KKT chillers Service Team (see *Contact data*).

97839225 NB 40-250/245 AF2ABAQE 50 Hz

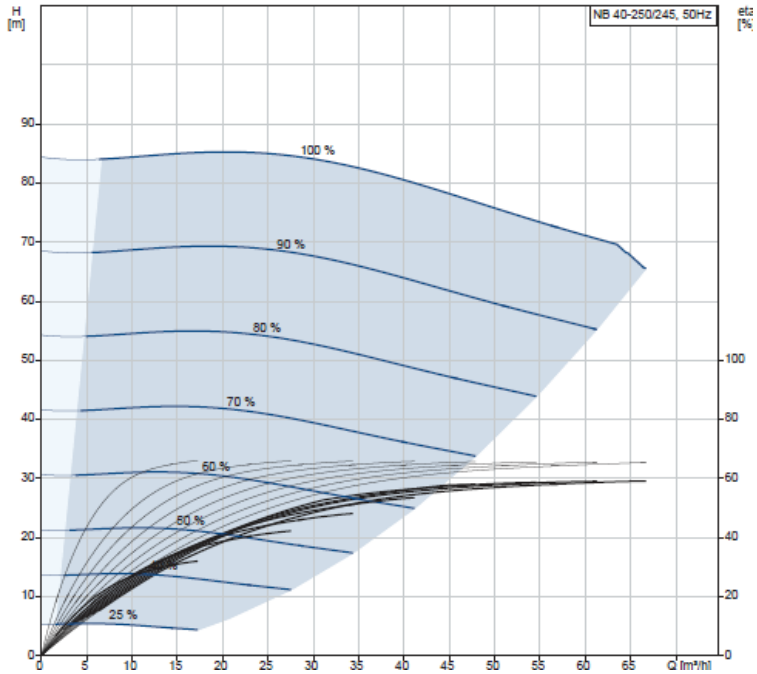

Figure 5: Pump type eBoxX260-300 -> Grundfos NB 40-250/245

96125030 NB 50-250/254 AF2ABAQE 50 Hz

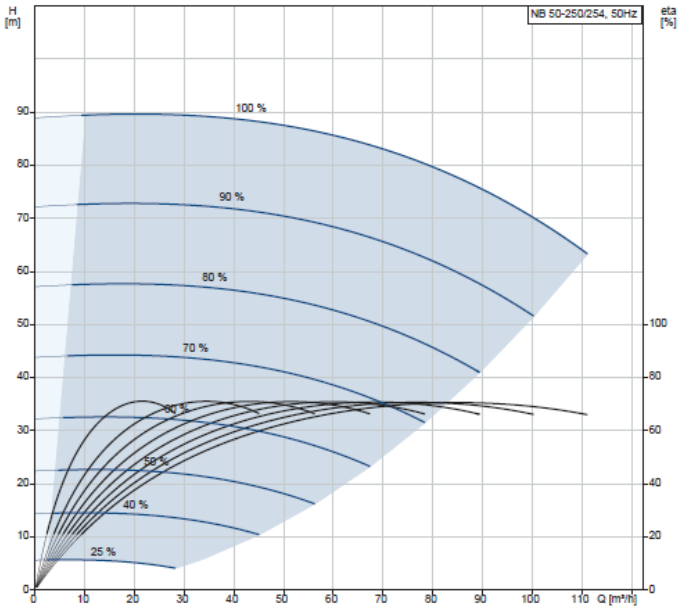

Figure 6: Pump type eBoxX350-530 -> Grundfos NB 50-250/254

5.2. Micro-channel condenser

The Evolution Line units are optionally available with an epoxy coated micro channel condenser. The Micro-Channel Registers made of aluminium / aluminium are treated with so-called "E-coating" to guarantee a higher wear protection against aggressive environmental conditions.

Electrofin ® E-Coating is a water-based epoxy polymer coating. The formula E-coat (PPG Powercron R) was developed to optimally cover even the corners of the flaps. Electrofin ® E-Coating is a UV-resistant technology and is used as corrosion protection of aluminium MCHX with 100% uninterrupted coverage. The top layer is approx. 15-30 microns and minimizes the loss of performance to a minimum. The following specifications are guaranteed:

Technical capacities of e-coating	Reference standards
Coating thickness; 15-30 micron (ASTM D7091-05)	MIL-C-46168 resistance to chemical agents - DS2, HCl gas
Immersed in water: >1000 hours @ 38°C (ASTM D870-02)	MIL-P-53084 (ME) approval TACOM
Moisture resistance 1000 hours minimum (ASTM D2247-99)	ASTM B117-G85 modified salt spray (Fog) 2000 test hours
Reduction of heat exchange <1%. (ARI 410)	
pH range: 3-12	
Temperature limits: -40 – 163°C	

Recommendation for the installation of the accessories:

1. Installation of the chiller in a marine environment. (Distance from the coast less than 5 km or more if the prevailing wind direction is from the sea to the interior).
2. Installation of the chiller in a rural/urban/industrial environment where pollutants or potentially corrosive substances are present. (Example: livestock breeding, hospitals, airports, volcanic areas...)

Definition coastal / marine areas:
Coastal and marine areas are characterised by the effects of the sea. Corrosion here is mainly caused by the salty sea water and potentially by the high degree of humidity. Sea salt can be blown away by the wind in the form of droplets or float in the mist and corrosion can be caused by the chlorine content many kilometres away from the sea. Marine areas are predominantly exposed to chlorine corrosion.

Definition of industrial environment:
Industrial areas are areas with industrial density. Industrial areas may differ greatly in terms of industrial typologies and the emission levels permitted in that area. There may also be different combinations of chemical substances. In industrial areas there is generally an increasing amount of sulphur, ammonia, chlorides, NOx mixtures, metals in the air and in powder form present. These substances are known to be corrosive to metals.

Definition of urban environment:
Cities are environments with high population density. These environments are generally polluted by traffic emissions and those of heating systems in buildings. The degree of pollution of the urban environment depends to a significant extent on the traffic density.
Definition of rural environment:
Rural environments are generally not corrosive. However, some local emissions are also often generated in rural areas. For instance, ammonia as a result of animal urination, fertilisers and diesel exhaust.

Table 10: Potential emissions

Installation near	Emission	Potentially aggressive substances
Power stations	Combustion products	SOx, NOx, chlorides, fluorides
Chemical sector	Emissions from industrial Processes	ammonia, chlorides, NOx, SOx
Organic plants	Emissions from industrial Processes	ammonia, NOx, SOx
Petrochemical industry	Oils, fuel, emissions from Processes	ammonia, chlorides, NOx, SOx
Petrol stations	Fuel, combustion products	Fuel leaks, chlorides, NOx, SOx
Airports	Combustion products	NOx, SOx,Chloride
Agriculture	Fertilizers	SOx, NOx, ammonia
Sea air, ships, offshore	Seawater mist	Chlorides, sulphides
Heavy industry	Pulverized coal	Sulphides, NOx, SOx
Steel plants	Pulverized coal	Sulphides, NOx, SOx
Food industry	Greases, humidity, cleaning agents	Chlorides, acids, NOx, SOx
Waste disposal	Organic particles in the air	Ammonia
Wastewater treatment plants	Organic particles in the air	Sulphides, ammonia

The polymeric treatment with ElectroFin ® E-coating is resistant to the chemical agents listed below at ambient temperature. This table should be used as a general reference.

Table 11: Resistance e-coating

Acetone	Fructose	Ozone
Acetic Acid	Gasoline	Perchloric Acid
Acetates (ALL)	Glucose	Phenol 85%
Amines (ALL)	Glycol	Phosgene
Ammonia	Glycol Ether	Phenolphthalein
Ammonium Hydroxide	Hydrochloric Acid <10%	Phosphoric Acid
Amino Acids	Hydrofluoric Acid (NR)	Potassium Chloride
Benzene	Formaldehyde <27%	Oxalic Acid
Borax	Hydrogen Peroxide <5%	Propyl Alcohol
Boric Acid	Hydrogen Sulfide	Propylene Glycol
Butyl Alcohol	Hydrazine	Salicylic Acid
Butyl CellosolveR	Hydroxylamine	Salt Water
Butyric Acid	Iodine	Sodium Bisulfite
Calcium Chloride	Isobutyl Alcohol	Sodium Chloride
Calcium Hypochlorite	Kerosene	Sodium Hypochlorite <5%
Carbon Tetrachloride	Lactic Acid	Sodium Hydroxide <10%
Cetyl Alcohol	Lactose	
Chlorides (ALL)	Lauryl Acid	Sodium Sulfate
Chlorine Gas / Gas di Coro	Magnesium	Stearic Acid
Chrome Acid (NR)	Maleic Acid	Sucrose
Citric Acid	Methanol	Sulfuric Acid <25%
Creosol	Methylene Chloride	Sulfates (ALL)
Diesel Fuel	Methyl Ethyl Ketone	Starch
Diethanolamine	Methyl Isobutyl Ketone	Toliene
Ethyl Acetate	Mustard Gas	Triethanolarmine
Ethyl Alcohol	Naphthol	Urea
Ethyl Ether	Nitric Acid (NR)	Vinegar
Fatty Acid	Oleic Acid	Xylene
Fluorine Gas		

5.3. Accessories for height-adjustable spring antivibration mountings

Height-adjustable spring antivibration mountings for installation by the customer (optional accessory).

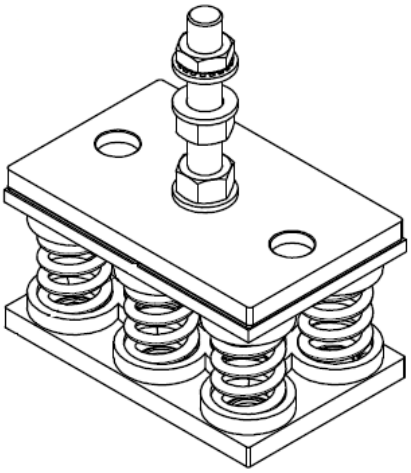

Figure 7: Height-adjustable spring antivibration mountings

5.4. Container shipping accessories

We would be pleased to offer you the dispatch of the chiller including container loading. The chiller in standard packaging (pallet & foil) is pushed into the container and can be transported in the container.

Figure 8: Packaging container eBoxX 250

6. Safety

The chiller, within the sense of its intentional use, is designed to operate safely, Provided that the instructions concerning transport, installation, commissioning and maintenance described in this operation manual are followed. The machine complies with the safety standards of the EC Declaration of Conformity.

Table 12: Reference standards

UNI EN ISO 12100	Safety of machinery General principles for design Risk assessment and risk reduction.
UNI EN ISO 13857	Safety of machinery Safety distances to prevent dangerous machine areas from being reached by the upper and lower limbs.
UNI EN 563	Safety of machinery Temperatures of touchable surfaces Ergonomics data to establish temperature limit values for hot surfaces
UNI EN 1050	Safety of machinery Principles of risk assessment.
UNI 10893	Technical product documentation. Operating manual
EN 13133	Brazing - brazing test.
EN 378-1	Refrigerating systems and heat pumps - Safety and environmental requirements - Part 1
EN 378-2	Refrigerating systems and heat pumps - Safety and environmental requirements - Part 2
CEI EN 60204-1	Safety of machinery Electrical equipment of machines Part 1 General requirements
UNI EN ISO 9614	Determination of sound power levels of noise sources using sound intensity
EN 50081-1:1992	Electromagnetic compatibility - Generic emission standard Part 1: Residential, commercial and light industry
EN 61000	Electromagnetic compatibility (EMC)

6.1. General information

The chiller contains a high-pressure circuit. The maximum pressure that occurs is 45 bar. Even when inactive or disconnected from the power supply the circuit is still under pressure.

The proper working order of the unit depends on the diligent observance of the instructions for use in this manual, compliance with the free areas intended for installation and the permissible area of use.

6.2. Hazard warnings

A number of warning labels are applied to the machine. Keep these warnings clean at all times. Damaged or missing warnings must be replaced.

	The GENERAL DANGER warning alerts operators and maintenance personnel to hazards that could result in death, injury, and permanent or latent illness.
	The warning DANGER - CONSTRUCTION PARTS UNDER VOLTAGE draws the attention of operators and maintenance personnel to the danger posed by live machine parts.
	The DANGER SHARP SURFACE warning alerts operators and maintenance personnel to the risks posed by potentially hazardous surfaces.
	The HOT SURFACE warning alerts the operator and maintenance personnel to hazards from potentially hot surfaces.
	The DANGER OF MOVING MACHINE PARTS warning alerts the operator and maintenance personnel to the hazard of moving machine parts.
	IMPORTANT WARNING draws the operator's and personnel's attention to interventions or hazards that may result in damage to the machine or its equipment.
	The environmental protection statement gives instructions for the use of the machine in compliance with environmental protection.

6.3. Residual energy

Even if all the hazard warnings in 6.2 are taken into account, the following residual energy situations can result in a hazard:

- Rotational energy of the decelerating fan
  - Despite the installed protective grille, hair or pieces of clothing can still be drawn in and caught.
- Hot surfaces on machine parts
  - Especially the compressor head and the hot gas pipe and the condenser can still be very hot for some time after the machine has been switched off. Temperatures within the range from 60 °C to 90 °C are possible.
- Dangerous electrical voltage in the control cabinet despite the switched off main switch
  - If the machine is only switched off at its main switch, dangerous electrical voltage is nonetheless still present at several terminals in the control cabinet. In particular, these are the main supply terminal and the input terminals of the main switch.
- Refrigeration circuit is pressurise
  - Provided it is not damaged the refrigeration circuit is closed. Therefore, a hazard is not to be assumed.

Accordingly, self-adhesive warning signs in accordance with the "ISO 3864" standard must be affixed to the machine.

Figure 9: Warning labels for residual energy eBoxX 260-300

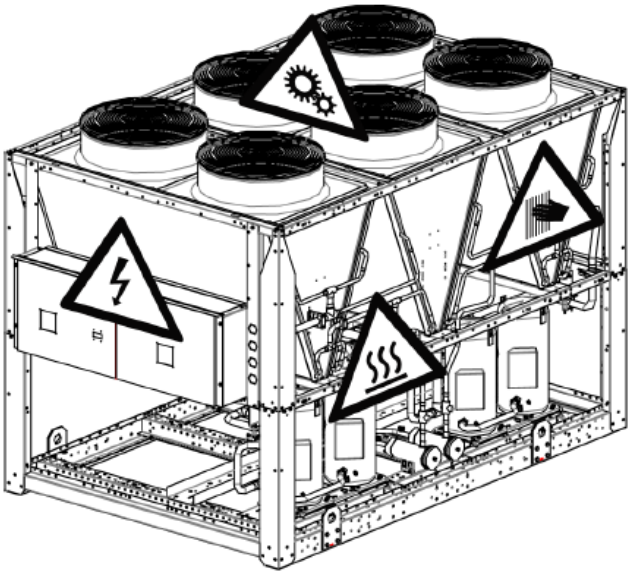

Figure 10: Warning labels for residual energy eBoxX 350-530

⚠	ATTENTION! The symbols and instructions on the machine must be observed.

Note:

After switching off the unit at the main switch, if you wait for 5 minutes before opening the unit risks due to rotational energy and electrical power can be reduced. In this case only the residual thermal energy must be considered.

6.4. Safety devices, guards and safeguards

The machines are preset at the factory. There, the settings and the input of the standard parameters are also performed, which under normal operating conditions guarantee the faultless operation of the machine.

The following components are available for the safety of the machine:

- High-pressure pressure switch
- Water-side differential pressure switch
- High pressure safety valve
- Low pressure transducer (generates low pressure alarm)

Table 13: Setting value of the safety components

Component	Tripping	Resetting
High-pressure pressure switch	42 bar	33 bar (manual)
Difference Water	80 mbar	105 mbar (automatic)
High-pressure safety valve	43 bar	-

	ATTENTION! The safety valve on the high pressure side is calibrated to 43 bar. It can be triggered if the calibration value is reached during the filling of the refrigerant, which can lead to an output and thus to cold burns (as with other valves in the circuit).

Note High pressure limiter:

Once it has been triggered, the pressostat must be reset manually by pressing its key all the way and resetting the alarm on the control panel. To identify the cause of the intervention and the maintenance required, refer to the troubleshooting table.

6.5. Personal protective equipment when operating the machine

Operating the machine involves making settings at the control panel. While the machine is being operated, its façade panels or protective grilles must be fitted and the machine must be completely closed. No protective equipment is needed.

We recommend ear protectors be worn by persons with jobs that require them to be continuously in the immediate vicinity of the chiller. Please refer to the sound emission information included in the technical data.

6.6. Personal protective equipment for servicing work

Service work on the machine includes all work in which the machine is opened and one or more façade panels or protective grilles are dismantled. In particular, cleaning or maintenance work. Before carrying out any work on the chiller, the prescribed protective equipment must be used.

Table 14: Personal protective equipment for servicing work

	Wear foot protection!
	Wear hand protection!
	Wear eye protection!
	Wear protective clothing!

6.7. Residual risks

6.7.1. Electrical

	ATTENTION! Based on the quality characteristics of EN 50160 and the defined standard voltages of IEC 60038, the mains voltage deviation may not exceed +/- 10% of the nominal voltage.

If all safety provisions are complied with there is no risk.

6.7.2. Mechanical

If all safety provisions are complied with there is no risk.
Mechanical damage to components or pipes of the refrigerant circuit can cause refrigerant to leak. Leaking refrigerant can cause cold burns.

6.7.3. Chemical

	ATTENTION! Toxic and caustic products are produced by the thermal decomposition of the R410A refrigerant.
	ATTENTION! Do not install in rooms with naked flames or smoke.

6.7.4. Other

	ATTENTION! Risk of suffocation if the chiller is installed in a room that is too small.
	ATTENTION! In the EU you must follow the provisions of EN378-3. Also observe the local installation instructions and regulations.

6.8. Dangerous substances

6.8.1. Refrigerant R410A

First aid measures:

- After inhaling: remove victim to fresh air, ensuring your own safety, and keep the person at rest in a comfortable position. Get medical attention. If the person stops breathing, give artificial respiration
- Following skin contact: leave clothing that has fused with the skin. Rinse areas damaged by cold with lukewarm water (never use hot water). Do nut rub! Cover with sterile dressing. Ensure medical treatment is provided.
- Following eye contact: rinse the eyes with clean water or eyewash solution for at least 15 minutes with the eyelids open. Consult an eye specialist.
- After swallowing: swallowing is not considered to be a likely risk as the refrigerant in the surroundings is gaseous.

Notes for the doctor: do not give the patient catacholamine or adrenalin ephedrine preparations.

Fire-fighting measures:

- Suitable extinguishing agents: The product itself is not flammable. Match the extinguishing measures to the surrounding fire. Cool containers with sprayed water.
- Particular hazards due to the substance, its combustion products or gases formed: forms toxic and caustic gases and fumes on decomposition.
- Special protective equipment for fire-fighting: self-contained or air-line breathing apparatus and acid-resistant protective suit for deployment in immediate vicinity.
- Further information: The effect of fire can cause bursting or explosion of the container. Ignitable gas-air mixtures possible under certain conditions.

Measures in case of accidental release:

- Environmental protection measures: where possible do not allow the product to get into the environment.
- Cleaning procedure: leave the product to evaporate.

Handling and storage:

- Handling: fire and explosion protection: heating results in increased pressure and a risk of bursting. Cool containers at risk with water. Open the containers slowly and carefully.

Personal protective equipment:

- Respiratory protection: not necessary if adequate ventilation available. Self-contained or air-line breathing apparatus within enclosed rooms, if insufficient oxygen supply available, in case of substantial or uncontrollable release. Only use breathing apparatus in accordance with the international / national standards. Only use breathing apparatus, no filtering devices.
- Hand protection: chemical-resistant protective gloves. Recommended material: Polyvinyl alcohol.
- Eye protection: close-fitting safety glasses/goggles.

General protection and hygiene measures:

- Do not inhale fumes / aerosols.
- Do not eat/drink or smoke during work.

6.8.2. Polyester oil

First aid measures:

- After inhaling: remove victim to fresh air, ensuring your own safety, and keep the person at rest in a comfortable position. Get medical attention.
- Following skin contact: remove soiled, soaked clothing. Wash skin with water. If symptoms develop, get medical advice.
- Following eye contact: rinse the eyes with clean water or eyewash solution for at least 10 minutes with the eyelids open. Consult an eye specialist.

- After swallowing: can cause vomiting. Have the mouth rinsed out with water and give the patient two glasses of water to drink. Get medical advice.
- Notes for the doctor: symptomatic treatment and assistive therapy as indicated.

Fire-fighting measures:
Low fire risk. Product only ignites in case of very large heat supply.

- Suitable extinguishing agents: match to the surroundings. Carbon dioxide, powder and foam extinguishing agents. Use water with caution to avoid possibly considerable steam generation.
- Particular hazards due to the substance, its combustion products or gases formed: irritant fumes are released during thermal decomposition.
- Special protective equipment for fire-fighting: self-contained or air-line breathing apparatus and acid-resistant protective suit for deployment in immediate vicinity.
- Further information: The effect of fire can cause bursting or explosion of the container. Ignitable gas-air mixtures possible under certain conditions.

Measures in case of accidental release:

- Environmental protection measures: do not allow the product to get into the sewers or bodies of water. Absorb with sand, soil or a similar absorbent material. Ensure proper disposal in containers.
- Cleaning procedure: Clean the contaminated area with water. Caution! Slipping hazard!
- Further information: Inform the police or competent authorities in case of penetration in the sewers or bodies of water.

Personal protective equipment:

- Respiratory protection: not necessary if adequate ventilation available. Self-contained or air-line breathing apparatus within enclosed rooms, if insufficient oxygen supply available, in case of substantial or uncontrollable release. Only use breathing apparatus in accordance with the international / national standards. Only use breathing apparatus, no filtering devices.
- Hand protection: Protective gloves. Recommended material: Nitrile rubber.
- Eye protection: close-fitting safety glasses/goggles.

Handling and storage:

- Handling: avoid lengthy skin contact. Avoid inhaling high concentrations of vapour. Avoid inhaling high concentrations of fumes.
- Storage: suitable material for containers: mild steel. Tightly close unused containers to prevent the penetration of moisture. Keep away from strong oxidants.

6.9. Reasonably foreseeable misuse

Reasonably foreseeable misuse, for the users of the chiller, means foreseeable use in a way not intended according to the operating manual. It is due to foreseeable human behaviour.
The following dangerous situations can arise due to misuse which could reasonably be expected:

- Dangerous voltage of electrical components, if the machine is not disconnected from the power supply before it is opened.
- The fan and compressor can start up suddenly, without any visible change to the machine's state.
- Even if the machine has been disconnected from the power supply, the surfaces of components in the unit can still be very hot or cold.
- Risk of damage to external hydraulic components if the cold water feed is confused with the cold water return.
- Danger caused by using media in the unit that have not been approved.
- Danger caused by connecting an incorrect source of power.

6.10. Information for emergencies

If an emergency occurs during operation of the chiller, the machine must be disconnected from the mains at once using the master switch. Remove people from the danger zone immediately. An emergency situation can among other things be:

- A leak and escape of refrigerant and/ or oil.
- A part of the machine becoming mechanically detached from it.
- The machine making unusual noises.
- The machine vibrating severely.

Then contact the KKT chillers Service Team (see ***Contact data***). If you have noticed any leakage of refrigerant or oil, proceed as described in the Hazardous materials section.

7. Noise emission

The airborne sound emissions data is given as the sound pressure level, measured at a distance of ten metres without reflection. Its maximum value is shown in the technical data and in the product flyer. This only occurs at the highest fan speed on the air intake side of the chiller.

7.1. Sound power and sound pressure level

Table 15: Sound power and sound pressure level

Type	Sound power level in dB per octave band (in Hz)							mean sound pressure level in dB(A)		
	125	250	500	1000	2000	4000	8000	Lw dB(A)	Lp 10 m	Lp 1 m
eBoxX 260	91	88	86	87	82	74	66	90	58	71
eBoxX 300	92	89	87	88	83	75	67	91	59	71.5
eBoxX 350	101	89	85	83	78	71	61	90	58	71
eBoxX 400	103	91	87	85	80	73	63	92	60	73
eBoxX 490	104	92	88	86	81	74	64	93	61	73
eBoxX 530	105	93	89	87	82	75	65	94	62	74

Lw: The total sound power level in dB(A) is based on measurements according to UNI EN-ISO9614 and the Eurovent Sound Test 8/1
Lp : Mean sound pressure level in dB(A) in accordance with ISO 3744
Data without consideration of the option hydraulic module.

Note
The Eurovent certification refers to the sound power value in dB(A) and is the only binding information on noise development. The sound pressure levels refer to the values calculated by the sound power for the installed units in free field with direction factor Q = 2 according to ISO 3744. The distance in metres is given in brackets. It is not possible to extrapolate sound pressure values for different distances.

In partial load operation or under favourable ambient conditions, the fan speed and thus also the noise emission are automatically reduced.

7.2. Notes on reducing noise and vibration

7.2.1. Noise

In the Chapter 7.1 you will find information on the airborne noise emission of your chiller. To reduce noise pollution caused by airborne sound emissions it is advisable to install the chiller out of doors and out of the range of workplaces. If this is not possible we recommend that when the unit is installed attention is paid to ensuring that the air intake side is not pointed directly at a workplace/workstation.

High ambient temperatures mean high fan speeds and this increases the noise levels produced. It is advisable not to expose the chiller to direct sunlight or to install it in rooms with high air temperature.

7.2.2. Vibration

The chiller is designed so that the vibrations caused by the compressor are largely isolated by the chiller's frame.
In order to further minimize the influence of vibrations, it is possible to install the chiller by means of optionally available vibration dampers (see Accessories for chapter5.3).

8. Handling and storage

The chiller is delivered from the factory fixed in transport packaging. Remove the packaging as late in the process as possible.

8.1. Dangerous goods

Chillers with refrigerant capacity >12 kg must be declared as dangerous goods in accordance with UN2857.

8.2. Transport

The chiller may only be transported using a fork lift truck or crane with sufficient rated capacity. The net weight of your machine is given in the technical data. Please note that if a machine has already been in operation, it can contain residual fluids, which increase the transport weight.

⚠	**ATTENTION! Always handle the unit with extreme care in order to avoid damage to the casing and the internal mechanical and electrical components.** **Also check that there are no persons or obstacles along the route to prevent the risk of impact, crushing or tipping over of the lifting and conveying equipment.**

8.2.1. Transport eBoxX 260 – eBoxX 300

The chiller may only be transported using a fork lift truck or crane with sufficient rated capacity. Figure 11: Transport eBoxX 260 - eBoxX 300 depicts the regulations for crane transport.

Remark forklift: It is possible to transport the machine both in a packed and an unpacked condition by means of fork lift truck. Please note that the centre of gravity may vary depending on the model.

Please observe the following:

- Always handle the unit with extreme care in order to avoid damage to the casing and the internal mechanical and electrical components.
- Do not stack the devices on top of each other.
- The permissible temperature range for storage is -20÷50°C
- The position of the lifting straps must be checked in accordance with the model and installed accessories.
- Make sure that the unit remains horizontal at all times during lifting and movement.

eBoxX 260 – eBoxX 300	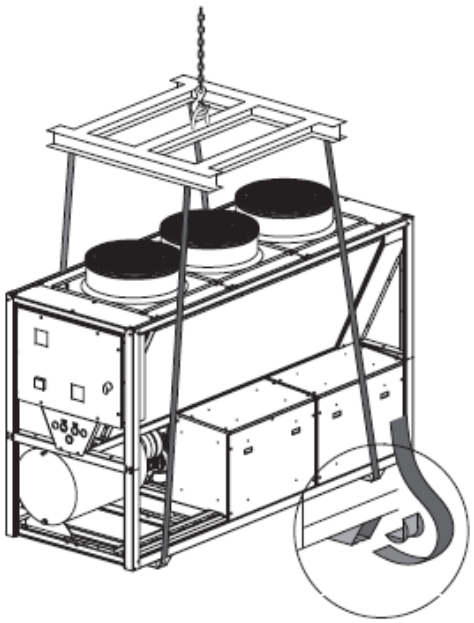

Figure 11: Transport eBoxX 260 - eBoxX 300

8.2.2. Transport eBoxX 350 – eBoxX 530

When it is unpacked, the machine can be lifted by means of a crane and an adequately dimensioned lifting beam. Figure 12: Transport eBoxX 350 - eBoxX 530 depicts the regulations for crane transport.

Please observe the following:

- Always handle the unit with extreme care in order to avoid damage to the casing and the internal mechanical and electrical components.
- Do not stack the devices on top of each other.
- The permissible temperature range for storage is -20÷50°C
- The position of the lifting straps must be checked in accordance with the model and installed accessories.
- Make sure that the unit remains horizontal at all times during lifting and movement.

eBoxX 350 - 400	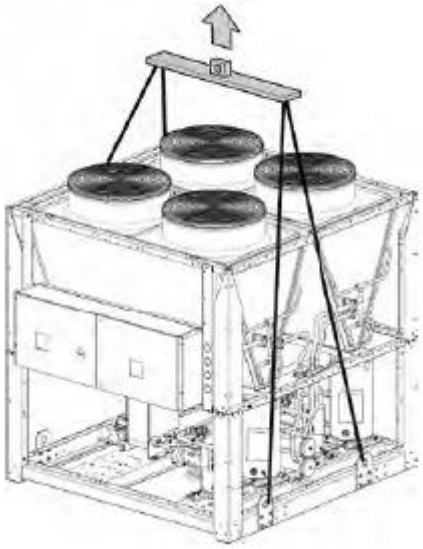
eBoxX 490 - 530	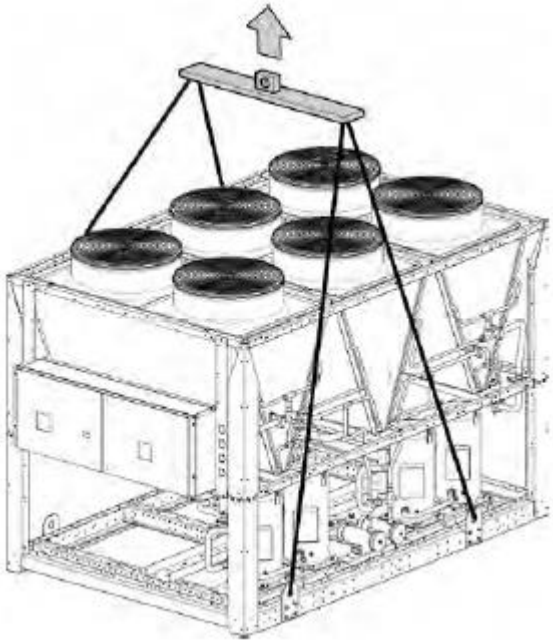

Figure 12: Transport eBoxX 350 - eBoxX 530

8.3. Unpacking

⚠	**ATTENTION! Packing straps are mechanically stressed and can snap back when cut. Risk of injuries!**

Remove all straps, films, corner protectors and spacers carefully. Optional accessories may be located under the film. Ensure that they are not damaged.

The packaging can be recycled according to the local regulations. Refer to the following table for details of the packaging materials used:

Table 16: Material of packaging

Element	Material	Recycling code
Polystyrene corner protectors	Polystyrene	06 PS
Stretch film	Polyethylene	04 PE-LD
Edge protection / corner protectors	Cardboard	21 PAP
Packaging tape	Polypropylene	05 PP
Strapping seals	Steel, galvanized	40 FE
Wooden pallet	Untreated raw wood, spruce or pine without bark	50 FOR

8.4. Storage

If the chiller is stored for more than one month, it should remain in the transport packaging or be repacked.

The following conditions must be noted for storage:

- Avoid direct sunlight and moisture
- Ambient temperatures 20°C to 50°C

To avoid frost damage the cold water circuit must be completely drained before the chiller is placed in storage and then flushed with a mixture of water and anti-freeze.

9. Installation

9.1. Overview

Several tasks are necessary to install the chiller. The following work schedule shows the order in which they are carried out:

- Prepare the installation site
- Install the machine
- Flush the cold water circuit
- Hydraulic installation
- Fill the whole system
- Vent the whole system
- Electrical installation

9.2. Weight distribution

eBoxX 260	eBoxX 300
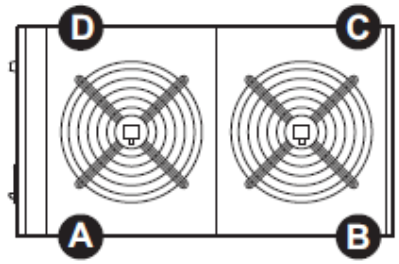	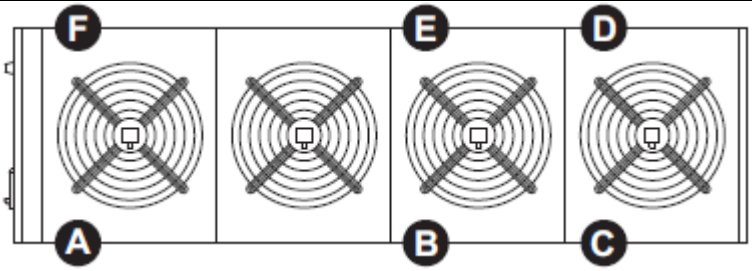

Table 17: Weight distribution eBoxX 260 – 300 without option Hydraulic module

Weight		eBoxX 260	eBoxX 300
net	kg	1,510	1,670
Support leg			
A	kg	449	283
B	kg	461	340
C	kg	327	366
D	kg	276	279
E			230
F			171

Table 18: Weight eBoxX 260 – 300 with hydraulic module

Weight		eBoxX 260	eBoxX 300
net	kg	2,030	2,190

eBoxX 350 – eBoxX 400	eBoxX 490 – eBoxX 530
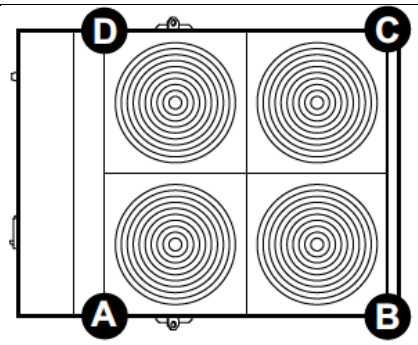	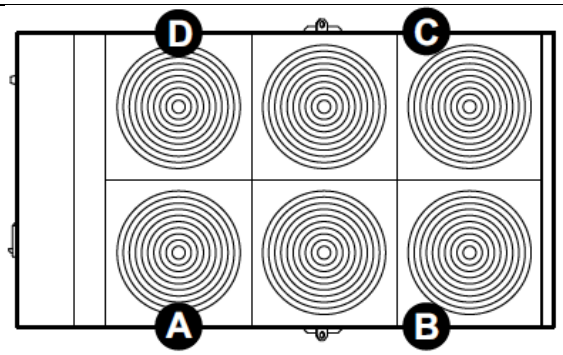

Table 19: Weight distribution eBoxX 350 – 530 without option Hydraulic module

Weight		eBoxX 350	eBoxX 400	eBoxX 490	eBoxX 530
net	kg	1,700	2,050	2,550	2,565
Support leg					
A	kg	570	700	871	879
B	kg	451	589	742	747
C	kg	300	349	438	618
D	kg	380	413	502	504

Table 20: Weight eBoxX 350 – 530 with hydraulic module

Weight		eBoxX 350	eBoxX 400	eBoxX 490	eBoxX 530
net	kg	2,380	2,730	3,360	3,375

9.3. Installation site

9.3.1. General information

The chiller is suitable for both indoor and outdoor installation. The electrical degree of protection corresponds to IP54. If installed indoors, ensure sufficient air exchange. An enclosed room will steadily heat up and the machine can switch off due to a lack of cooling. The exhaust heat from the machine can be approximately calculated as 1.3 x net refrigeration capacity. When choosing the installation site, ensure that waste heat from other processes cannot be guided directly onto the air intake side of the chiller.

⚠	ATTENTION! The unit is designed exclusively for operation as a chiller with air-cooled condensation. Any other use is expressly PROHIBITED. Installation of the unit in a potentially explosive atmosphere is strictly prohibited.
⚠	ATTENTION! The machine is designed for indoor and outdoor installation. If installed in a place accessible to persons under 14 years of age, access to the machine must be secured by means of a lock.

⚠	ATTENTION! Do not install in rooms with naked flames or smoke.

9.3.2. Minimum room volume

The refrigerant R410A contained in the system is classified in safety group A1 in accordance with EN 378-1 Table E.2. I.e. the refrigerant is not flammable and has low toxicity. If the chiller is installed in enclosed rooms without additional safety measures a minimum room volume is required. This is due to the maximum concentration occurring in an area occupied by persons in the event of release and depends on the refrigerant quantity in the chiller.

9.3.3. Ambient temperature

The chiller is cooled by the ambient air and the lower the temperature of this cooling air the more economically the chiller works. Direct sunshine or exhaust air from other machines heats up the surrounding air and must be taken into account when installing the chiller. Preference is for a shaded installation. The maximum ambient temperature is given in the technical data.

9.3.4. Effect of surrounding air flow

The chiller emits heat to the surrounding area, the machine also draws in cooling air. The machine controls the quantity of cooling air automatically via the speed of the fan. Air currents surrounding the machine, such as the wind, can affect this control and endanger operation of the machine. If a constant direction of an air current is known at the installation site, this should not be directed at the air intake side of the chiller.

9.3.5. Minimum clearances

The minimum clearances around the machine are made up of service clearances and clearances to ensure optimum air supply. On the one hand accessibility must be ensured from all sides, in addition, an unhindered, sufficient quantity of cooling air must be able to be drawn in and blown out upwards. If the minimum clearances are not complied with there is a risk of an air short-circuit between the air intake and discharge side.

Table 21: Minimum distances eBoxX 260 to eBoxX 530

eBoxX 260 - 300	
L1 = 1,500 mm L2 = 1,500 mm L3 = 1,500 mm L4 = 1,500 mm	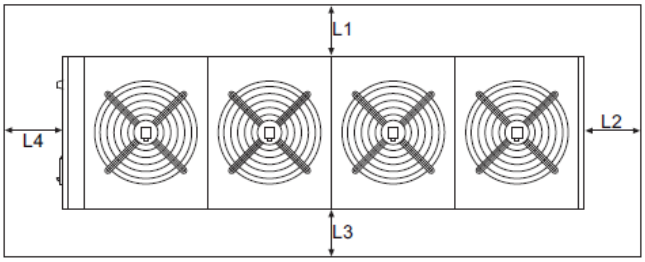
eBoxX 350 – 530	
L1 = 1,500 mm L2 = 1,500 mm L3 = 1,500 mm L4 = 1,500 mm	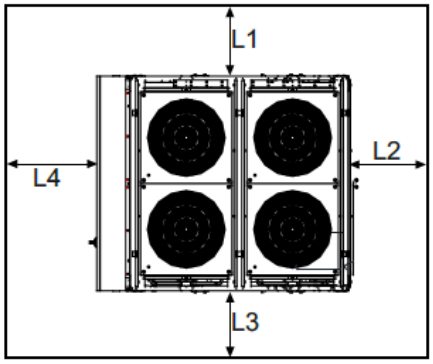

Note:
To facilitate maintenance and service, the distance L1 for the option with integrated hydraulic module should be increased by approx. 1 metre.

9.3.6. Surface and foundation

The surface on which the machine is installed must be flat and horizontal. All the machine's feet must have uniform contact with the ground. Ensure that the ground/subsoil has sufficient load bearing capacity. A continuous concrete foundation in accordance with ***(minimum requirements EN 206-1 / EN 1045-2: cube strength fck, cube 30N / mm², concrete class C30 to 50, concrete thickness at least 20 cm)*** is recommended.

For chillers equipped with the hydraulic module option, the tank filling quantity is added to the net weight during operation. This gives the gross weight.

If it is not possible to lay a foundation, the machine can also be positioned on a baseframe made of steel sections. Please also ensure here that all the unit feet have uniform contact with the baseframe.

9.3.7. Stability

The normal situation is for the machine to be positioned firmly on the ground. It is not necessary to anchor the machine to the ground. If, however, if ambient conditions make it necessary, the machine can be connected to the ground at the base frame or optionally equipped with the available vibration dampers.

9.3.8. Vibration isolation

If it is necessary to isolate the chiller on the ground or floor, this can be done using the optionally available vibration dampers. If there is a risk of vibration being transmitted by neighbouring machines, separate vibration decoupling must be carried out.

9.3.9. Installation

OUT →	Device outlet
IN ←	Device inlet

Shut-off valves (ball valve, butterfly valves) should be installed externally, which can separate the chiller from the rest of the system. A dirt filter (not larger than 0.8 mm) should also be provided to protect the entire system and adapted to the pressure losses of the system. Clean this filter based on the degree of contamination.

⚠	**ATTENTION! The water circuit and the connection of the unit to the system must be carried out in accordance with local and national regulations.**

9.3.10. Hydraulic installation

The system designer is responsible for choosing the material and the cross-section of the hydraulic connections between the chiller and the application. Dependent factors are, among other things, the tolerated pressure loss in the connecting pipes and the available external or internal pump pressure. When designing the connections attention must also be paid to the minimum flow rate to be maintained and sufficient resistance to the maximum pump pressure.

It must also be ensured during hydraulic installation that the device connections available on the chiller do not represent a fixed point. In order to avoid damage to the pipework and chiller, support of the hydraulic connections near the unit connections must be provided by the customer.

The installation of compensators between the equipment connections and the hydraulic installation is recommended.

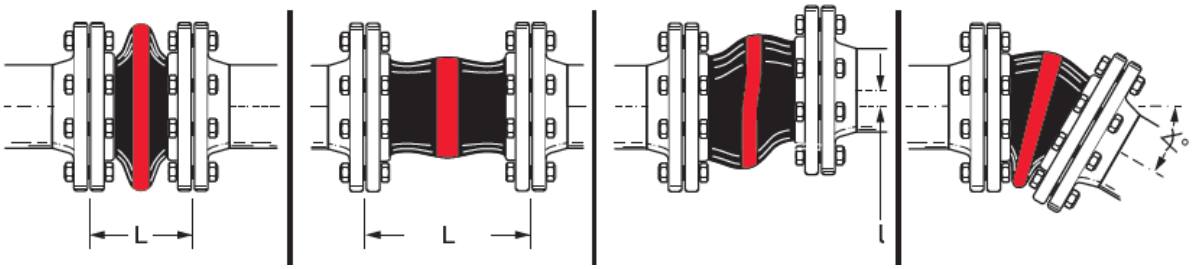

9.3.11. Frost protection measures

The chiller is exposed to the risk of frost in two different situations. Both with an ambient temperature < 5 °C and a flow temperature < 10 °C there is a risk of freezing of parts of the cold water circuit system.

Installation at ambient temperature < 5 °C with anti-freeze mixture
The machine is protected against freezing by anti-freeze mixture Ensure that you always comply with the requirements with regard to the operating fluid and the mix ratio.

Flow temperature < 10 °C
The machine must be protected against freezing by anti-freeze mixture in accordance with the specifications. Please note that the evaporation temperature is always significantly below the cold water flow temperature. Ensure that you comply with the requirements with regard to the operating fluid and the mix ratio.

9.3.12. Flushing the cold water circuit

Contamination of external pipes and components can damage the chiller. Before the chiller is connected hydraulically with the cold water circuit this must be flushed several times. If dirt traps are present in the system circuit, they must be cleaned after flushing.

9.3.13. Filling

Once the hydraulic installation of the overall system has been completed, the chiller can be filled. All shut-off valves in the cold water circuit must be opened. For filling, please use the internal filling connections in the device or provide an external filling possibility for atmospherically closed systems.

	ATTENTION! Only use approved coolant media! If there is a risk of frost, please observe anti-freeze mixture! All operating liquids must be mixed before they are added to the system!

9.3.14. Venting

Please use the internal ventilation fittings in the unit for venting. Installation in ambient temperature < 5 °C with anti-freeze In addition, we recommend installing a suitable vent valve at the highest point in the cold water circuit. Several automatic air vents may therefore be necessary.

9.3.15. Electrical installation

	ATTENTION! The electrical installation, testing and commissioning may only be carried out by qualified personnel. Note and follow the local regulations.
	ATTENTION! Do not activate the chiller until the hydraulic installation has been completed and the machine has been filled according to the specifications. Otherwise the machine could be damaged.
	ATTENTION! Make sure that the screws securing the conductors to the electrical components in the control cabinet are properly tightened. (They may have loosened during movement and transport.)

Note:
Always install a circuit-breaker with delayed characteristic, sufficient load capacity and breaking capacity and with a minimum contact opening of 3 mm at a protected location and close to the machine. (The device must be able to interrupt the assumed short-circuit current, the value of which is determined according to the characteristics of the installation). The connection of the machine to an earthing system is required by law and serves to protect the user during machine operation.

The safety door lock automatically cuts off the power supply to the unit as soon as the control box cover is opened. After opening the front panel of the unit, place the supply cables through the cable ducts on the outer casing and then through the cable ducts at the bottom of the control box. The power supply coming from the three-phase line must go to the circuit breaker. The power supply cable (not below H05RNF) must be flexible and have a neoprene sheath: for cross section see or wiring diagram or according to local utility regulations.

Never switch on the chiller immediately if the machine is moved from a cold into a warm room. The condensing moisture can damage electronic components. For the initial startup or following a lengthy period out of use all the electronic components must have become acclimatised.

If you use an external control cable to set the release for the chiller, this is laid parallel to the supply cable and wired to the corresponding terminals in the control cabinet. (Refer to the circuit diagram included with the device)

Once the electrical installation has been completed the phase sequence must be tested. This can be done with a rotating field meter.

10. Commissioning

	ATTENTION! Before any maintenance work - even simple visual inspections - always disconnect the machine from the mains with the main switch first. Make sure that nobody can accidentally activate the machine; block the main switch in position "0".

Before commissioning the chiller, use the checklist to check whether all the necessary work from the ***Setup and Installation*** chapter has been carried out correctly.

The following points must be observed before activating the chiller:

- The mains voltage must correspond to the values given on the nameplate and/or in the wiring diagram with the following tolerance range in the "Electrical connections" section
- The power supply must be dimensioned for the power consumption of the machine;
- Open the control box and ensure that the terminals and contactors are tight (they can become loose during transport, causing malfunctions);

10.1. Start the procedure

	ATTENTION! Switch on the power supply at least 12 hours prior to commissioning so that the crankcase heater of the compressor is supplied with power. These heaters are automatically switched off each time the machine is started.
	ATTENTION! The initial start-up of the unit may only be carried out by qualified personnel. Note and follow the local regulations.

Once the installation and connection of the unit have been completed, the unit can be started. Strictly observe the diagrams in the following sections for correct initial commissioning of the unit.

10.1.1. General condition of the unit

Start

Have the minimum technical distances specified in the instructions been observed?

"no"

Observe the specified technical minimum distances!

"yes"

Are the microchannels free of blockages?

"no"

Clean the microchannel!

"yes"

Are the grilles of the fans free of blockages?

"no"

Remove blockages!

"yes"

Is the unit damaged due to transport or installation?

"no"

DANGER: Do not start the unit under any circumstances! The unit must be inspected and repaired if necessary. Contact KKT-chillers for this.

"yes"

The unit is in good condition.

10.1.2. Checking the oil level of the compressor

Start		
Is the oil level sufficient?	"no"	Refill as required
"yes"		
Was preheating switched on at least 12 hours before the start?	"no"	Switch on preheating and wait 12 hours.
"yes"		
The compressors are ready to start.		

	ATTENTION! The initial commissioning of the unit may only be carried out by qualified personnel. Note and follow the local regulations.

10.1.3. Checking the water connections

Start		
Were the connections made correctly?	**"no"**	Adjust the connections!
"yes"		
Is the inlet and outlet direction of the water correct?	**"no"**	Adjust the inlet and outlet direction!
"yes"		
Are the circuits filled with water or water-glycol (according to specification) and vented?	**"no"**	Filling and/or venting circuits
"yes"		
Does the flow rate correspond to the information in the operating manual?	**"no"**	Restore the flow rate!
"yes"		
Is the rotating field correct, has the phase position been checked?	**"no"**	Check the rotating field and, if necessary, establish the correct phase position!
"yes"		
Have external flow monitors or dirt traps been connected correctly?	**"no"**	Correct or replace the components!
"yes"		
The water connection is compliant.		

10.1.4. Electrical connections

Start

Is the unit is fed according to the values indicated on the nameplate and in the circuit diagram?	**"no"**	Make sure that the supply is correct!

"yes"

Is the phase sequence correct?	**"no"**	Make sure that the phase sequence is correct!

"yes"

Does the earth connection comply with the legal regulations?	**"no"**	**DANGER: Reposition the earth connection!**

"yes"

Are the conductors of the power circuit dimensioned according to the instructions?	**"no"**	**DANGER: Replace the cables immediately!**

"yes"

Is the circuit breaker connected upstream of the unit correctly dimensioned?	**"no"**	**DANGER: Replace the component immediately!**

"yes"

The electrical connection is compliant.

10.2. Initial commissioning

If the previously listed checks have been completed with a positive result, you can proceed with the initial commissioning of the machine.

Start

Activate the motor protection switches of the compressors.

"yes"

Simulate a test start to check whether the contactors have been fitted correctly.

"yes"

Disconnect the power supply to the auxiliary circuit again.

"no"

Check the component and replace if necessary!

"yes"

Re-activate the motor protection switches of the compressors.

"yes"

Power the auxiliary circuit again.

"yes"

Start the unit from the control panel.

"yes"

Select from the following operating modes.

"yes"

Check the correct rotation of the pumps (hydraulic module option) and flow rates.

"no"

Check the component and replace if necessary!

"yes"

Complete start procedure.

10.3. Checking while the machine is running

Start		
Unauthorized persons must be sent away.		
"OK"		
Is the differential pressure switch on the water side triggered correctly?	**"no"**	Check the component and replace if necessary!
"yes"		
Is the operating pressure reading correct?	**"no"**	Switch off the unit and find the cause of this malfunction!
"yes"		
Are gas leaks of > 3 grams/year detected, when the pressure is brought at the high pressure side to about 8 bar? (according to EN 378-2)	**"no"**	Switch off the unit and find the cause of this malfunction!
"yes"		
Does the display show no alarms?	**"no"**	Find the cause of the alarm and the cause of this malfunction!
"yes"		
Check completed.		

11. Operation

The chiller is designed for fully automatic operation.

11.1. Switching on / off

First switch on the device by flipping the main switch.

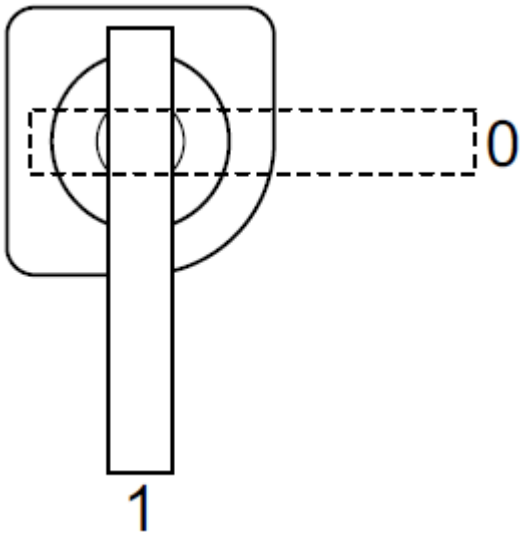

Figure 13: Main switch

Switching on the system	Switching off the system
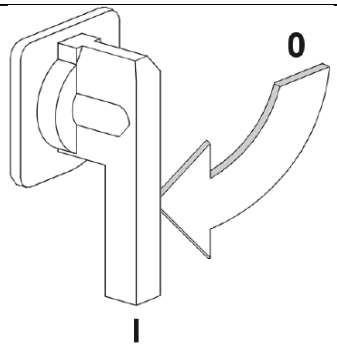	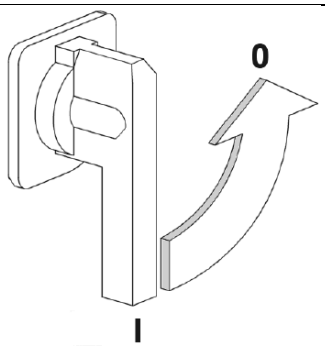
Turn the circuit breaker on the handle by 90° clockwise.	Turn the circuit breaker on the handle by 90° counter-clockwise. The control panel is turned off.

11.2. Control panel / User interface

Figure 14: Control panel

Table 22: Control panel buttons

Button	Action
	Button [ALARM] Visualisation of the list of active alarms
	Button [PRG] Provides access to the programming menu for the settings.
	Button [ESC] Return to the upper level mask
	Button [UP] If the cursor is on the movement field (upper left corner), you return to the previous mask; if it is on an editable value, it is increased.
	Button [ENTER] To confirm the entered value and move the cursor to the following field
	Button [DOWN] If the cursor is on the movement field (upper left corner), you return to the previous mask; if it is located on a changeable value, this value is reduced.

Using the switches and the keyboard, the user can perform the following operations:

- Unit power supply
- Unit start-up;
- stand-by;
- Switching/selecting the operating mode;
- Setting the cooling and heating setpoints;
- Clock and time range setting;
- Local monitoring protocol setting;
- Display of alarm messages;
- Visualisation of the status of the main components via LED display or display;
- Display of the operating hours counter;
- Switching off the unit

11.3. Status after switching on and off

After switching on the system, the following screen page appears

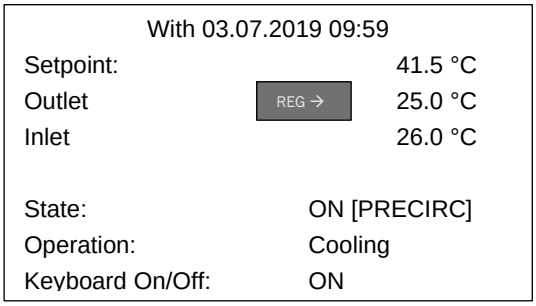

Figure 15: Start screen

To switch on/off the unit:

1. Move the cursor to the last line while pressing the ENTER key.
2. Use the UP and DOWN buttons to change the "ON" - "OFF" setting.
3. Confirm the setting by pressing the ENTER button.

Display	Comment
Input	Water temperature input primary side
Output	Water temperature output primary side
REG	Displays the temperature used for control.
Status	On Off alarms (the machine is off because there is an alarm) OFF by the supervisor (the machine is in Off because of an external supervisor) Off from seq. (the machine is set to Off by command of step switching of the unit) Off due to timer (the machine is set to Off during corresponding time periods) Off because of SCR (the machine is set to Off from the digital input) Off because of display (the machine is set to Off because of manual setting)
Mode	Shows the operating mode of the machine: Cooling
Keyboard on/off	For switching the unit on and off. (ON) = Unit On (OFF) = Unit Off
Setpoint	Display of the current working setpoint value
[PRECIRC]	Phase of pre-circulation of the primary circuit pump
[ACS]	Indicates that the unit produces hot water for the sanitary water circuit.
[OPTIMIZER ON]	Indicates that the optimization of the absorbed power is activated.
[FNR ON]	Indicates that the noise reduction function is active
[FREECOOLING]	Indicates that the free-cooling function is activated

11.4. Status of refrigeration circuits

By pressing the UP and DOWN keys you can scroll through some menus on the main screen page and check the status of the unit and some settings. The first screen is the status of cooling circuit 1, followed by the other circuits (if more than one).

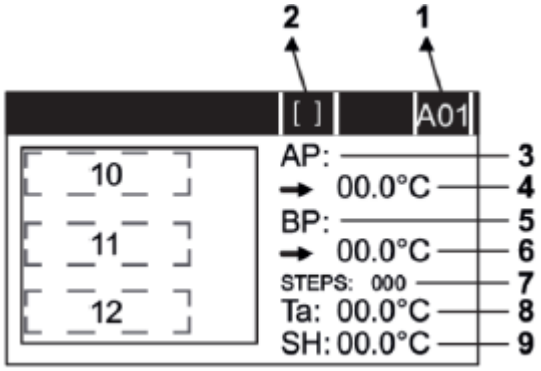

Figure 16: Status of refrigeration circuits

Display		Comment
1		Code of the mask. The letter denotes the menu, while the number is consecutive.
2	[N] [F]	Circuit off Circuit generates cold
3	AP	Display high pressure [barg]
4	→	Display of the conversion of the high pressure value into temperature [°C].
5	BP	Display low pressure [barg]
6	→	Display of the conversion of low pressure into temperature [°C].
7	STEPS	Electronic thermostatic valve positioning indicator [opening level].
8	Ta	Display of the suction temperature of the compressor
9	SH	Display of the superheating value
10	3 80%	Fan speed regulation steps and percentage of analog signal
11	StartStop	Compressor in Start/Stop phase
	Alarm	Compressor in alarm condition
	Off (*)	Turn compressor off and on
	Forz. Off	Unit switched off or manual compressor deactivation or switch-off
	On (**)	Compressor on
	(*)	OffT=XXXs (compressor in OFF for safety interval equal to the value visualised opposite).
	(**)	OnT= XXXs (compressor in ON for safety interval equal to the value visualised opposite).
12	[PREVENT]	Function Prevention Alarm Unit
	[FAN]	Pre-ventilation activated
	[EVOSYNC]	Synchronisation phase

11.5. Menu navigation

If you press the PRG key, the main menu can be accessed. With the UP and DOWN keys you can select the desired menu and pressing the Enter key takes you go to it. To return to the previous menu, press the Esc key.

11.6. Main menu

Press the Prg key to return to the Seconds main menu.

```
Main menu                    01/09

        A.  Setpoint

        B.  Clock

        C.  Limitation
```

Figure 17: Main menu 1

```
Main menu                    05/09

        D.  Input / Output

        E.  Data storage

        F.  Info
```

Figure 18: Main menu 2

```
Main menu                    09/09

        G.  Language selection

        H.  Operating hours

        I.  Config GLT
```

Figure 19: Main menu 3

Use the Up and Down keys to scroll through the following menus:

Display		Comment
A	Setpoint	Menu for setpoint adjustment
B	Clock	Menu for setting the time periods
C	Limitations	Menu for setting the current and noise limitation (Note: Options – not included in standard)
D	Input / Output	Menu for visualisation of the status of the digital/analog inputs/outputs of the circuit board
E	Data storage	Menu for visualisation of alarm archives
F	Info	Menu with information about the software
G	Language selection	Menu Language selection
H	Operating hours	Operating hours menu
i	Configuration	Menu for configuring the BMS ports

By pressing the ENTER key, the selection can be confirmed and the desired menu called up.

11.7. Setpoint value menu

In addition to the water temperature setpoint for all operating modes (cooling mode, heating mode, recovery, domestic hot water), the operating mode can also be set in the Setpoint menu (see Figure 17: Main menu 1).

Setpoint	A01
Mode change:	Display
Unit mode	Cooling
Adaptive mode:	PRECISION
Parameter radiant.	NO

Figure 20: Setpoint value menu

Display	Comment
Mode change	Setting, whether the selection of the operating mode of the unit via the display or the external digital contact is to be used
Unit mode	If the machine operating mode is selected via the display, the following can be set: COOLING MODE or HEATING MODE Note: only cooling mode for the Evo Line
Adaptive mode	Setting the control curve of the AF+ function (not available if climatic setpoint compensation is activated or with control at return flow)
Parameter radiant	Activation of ECONOMY parameters for applications with radiation systems (not available if climatic setpoint compensation is activated or with control at return flow)

11.7.1. Function AF+

The AF+ function can be set in Economy or Precision mode. The Economy function combines comfort and low energy consumption. By changing the setpoint, the compressor operation is optimised according to the actual load conditions.

If the PRECISION mode is set, the setpoint compensation can be set in the following masks with the climatic curve. With the Precision function, the smallest average deviation from the water temperature setpoint of the water supplied to the consumers can be achieved at partial loads.

You can choose between the following efficiency types:

Setting	Comment
Precision	Uses the setpoint set by the user (default).
Economy LOW	Use for consumers with very different loads
Economy MED	Use for consumers with medium different loads
Economy HIGH	Use for consumers with very uniform loads – highest degree of efficiency

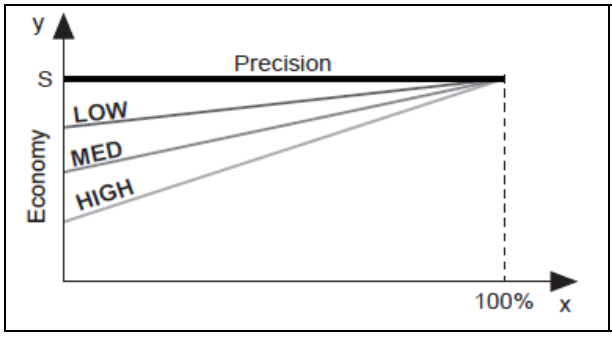

x = Load component [%]
y = Actual value [°C]
S = Setpoint set by user [°C]

Figure 21: AF+ in cooling mode/AUTOMATIC

11.7.2. Setpoint compensation

If the machine is set to the return temperature or to the flow temperature and AF+ is used in Precision mode, climatic compensation of the setpoint can be activated based on the outdoor temperature. The more critical the external conditions are, the greater the correction made to the setpoint. The compensation can be activated/deactivated individually for each operating mode.

Setpoint	A02
Cooling mode	
Setpoint 1:	8.0 °C
Offset:	-0.4 °C
Act. setpoint.	7.6 °C

Figure 22: Compensation/offset setpoint

Setting	Comment
Setpoint 1	Main setpoint in COOLING MODE/AUTOMATIC mode
Offset:	Offset / temperature adjustment
Act. Setpoint	Display of the current working setpoint value

11.8. Limitations menu

In the Limitations menu, see Figure 17: Main menu 1, it is possible to define the use of the FDL option ("Forced download compressors"), which restricts the power output by the machine and therefore its power consumption, and of the FNR function ("Forced Noise Reduction"), which limits the noise generated by the fans by changing the ventilation control parameters.

Please note: both options are not available in the standard version. If you have any further questions about your machine, please contact the KKT chillers team (*see: Contact details*).

11.8.1. FDL = Power reduction

Limitation	C01
FDL Power reduc.	
ON through:	Clock + DIN
Power limit..:	100 %

Figure 23: FDL - Power reduction

Setting	Comment
ON through	Sources for the power reduction control command
Power lim.	Percentage of the total power of the machine to which the power demand is to be limited. The EEM accessory can be used to set a percentage of the maximum power or the maximum kW value consumed.

The possible sources of the power reduction control command are:

Setting	Comment
Deactivated	Function deactivated
F.Oraria	Function activated for time switches.
DIN	Function activated for digital input (contact open Function deactivated, contact closed Function activated)
DIN+F.Oraria	Function activated for digital input or timers
Always	Function always activated

If the function is activated with the logic timer or DIN+ timer, the time periods in which this function is to be activated can be set.

Power red.	C02
MON	From 8:30 a.m. to 4:50 p.m.
TUE	From 12:00 a.m. to 12:00 a.m.
WED	From 12:00 a.m. to 12:00 a.m.
THU	From 12:00 a.m. to 12:00 a.m.
FRI	From 12:00 a.m. to 12:00 a.m.
SAT	From 12:00 a.m. to 12:00 a.m.
SUN	From 12:00 a.m. to 12:00 a.m.

Figure 24: FDL times

11.8.2. FNR = Noise reduction

The FNR option makes it possible to change the operation of the fans and thus also the noise generated. 2 setting sets can be used:

FNR1: Quiet mode - Priority Full Load in chiller mode
FNR2: Quiet mode - priority noiselessness in chiller mode

Limitation	C02
FNR air reduction.	
ON through:	Clock + DIN

Figure 25: FNR - Noise reduction

The possible sources of the power reduction control command are:

Setting	Comment
Deactivated	Function deactivated
F.Oraria	Function activated for time switches.
DIN	Function activated for digital input (FNR1 and FNR2)
DIN+F.Oraria	Function activated for digital input or timers
Always FNR1	Function activated with settings FNR1
Always FNR2	Function always activated with settings FNR2

If the FNR of time ranges function is activated, the cooling and heating time ranges can be set in the following masks.

Limitation			C12
Day: Monday			
Copy to Monday:			NO
		Cool	
1:	01:00	FNR2	
2:	07:00	OFF	
3:	22:00	FNR1	
4:	--:--	---	

Figure 26: FNR times

Setting	Comment
1	Day to be programmed. Changing the day loads the time ranges of the selected day on the display.
2	The value of the displayed day can be copied to another day, which can be freely selected. Select the target day and set YES.
3	Setting the start time of the timer. An OFF command can be set for each range (FNR deactivated) or On with settings FNR1 or FNR2. Example: Time range 1 starts at 1:00 a.m. and ends at 7:00 a.m. (FNR2 settings). Time range 2 starts at 7:00 a.m. and ends at 10:00 p.m. (FNR deactivated). Time range 3 starts at 10:00 p.m. and ends at 1:00 a.m. (settings FNR1). Attention: For correct operation of the time ranges, the clock times must be set to increase.

11.9. Inputs / outputs menu

The Inputs / outputs menu, see Figure 17: Main menu 1, is displayed one after the other via the current status.

Analog inputs (water temperature probes, pressure transducers)

Input/Output		D01
	Analog input	
Outdoor temperature		
	m/B1:	23.8 °C
WRG inlet temperature		
	m/B2:	45.9 °C
Compressor Inlet Water Temperature		
	m/B3:	35.0 °C

Figure 27: Analog inputs

Digital inputs (alarms, releases)

Input/Output		D11
	Digital input	
High pressure pressostat C1		
	m/ID1:	Closed
Power reduction		
	m/ID2:	Closed
Motor protection compressor 1 C1		
	m/ID3:	Closed

Figure 28: Digital inputs

Digital outputs (switching on devices)

Input/Output		D50
	Digital output	
Compressor 1 C1		
	m/NO1:	Open
Compressor 2 C1		
	m/NO2	open
Fan contactor C1		
	m/ NO3	open

Figure 29: Digital outputs

11.10. Data memory menu

In the Data Logger / Alarm archive menu, see Figure 18: Main menu 2, you can view the information related to the machine status at the time the alarms occurred. Note: this menu can only be accessed if at least one alarm has occurred on the unit.

The main screen shows the description of the alarm triggered, the date/time of the alarm and the status of the device. The UP and DOWN keys can be used to scroll through previous alarms.

```
Alarm history                    E01
No 029                 03/07/2019 15:19
ALU 05
Evaporator Pump 2


State: On
Operation: Cooling
```

Figure 30: Alarm history

Press the ENTER key to display the details of the displayed alarm. Use the UP and DOWN keys to scroll through the detail views.

11.11. Info menu

The Info menu, see Figure 18: Main menu 2, shows the most important information regarding the software version.

```
Information                      F01

                 Rhoss S.p.A.
Type:    EXP
         Air / water
Model:   TCAEBY
S/N:     RHC3Z
```

Figure 31: Menu info 1

General description of the hardware and software of the unit:

```
Information                      F02

Software ID:                      13
Ver.     2.5              03.07.2019

Bios:    6.0              03.07.2019
Boot:    4.0              03.07.2019
```

Figure 32: Menu info 2

General description of the hardware and software of the unit:

```
Information                      F03
Board Type:                      uP
Card size:                       Medium
Total flash:                     2048kB
RAM:                             1024kB
Build-In Type:
FW Release:                      0.0
Main circuit:                    13s
```

Figure 33: Menu info 3

General description of the machine configuration:

Information	F04
Unit:	Air/Water
Gas type:	R410A
Circuit:	2
Compressor per circuit:	2
Evaporator	1
Condenser	1

Figure 34: Menu info 4

General description of the inverter hardware and software:

Information	F05
Power + no 1	
Boot Version:	0
FW Version:	0
FW Checksum:	0
MC Version:	0
Hardware ID:	0

Figure 35: Menu info 5

11.12. Menu Language selection

The language used in all software masks can be selected in the Language change menu, see Figure 19: Main menu 3.

Language	G01
SELECT LANGUAGE	
German	

Figure 36: Set language

Select the desired language with the UP and DOWN arrow keys, then press ESC to exit. Available languages:

1. Italian
2. German
3. English
4. Spanish
5. French

11.13. Operating hours menu

In the operating hours or working hours menu in accordance with Figure 19: Main menu 3, it is possible to display the total hours worked and the number of compressor starts for each compressor.

Operating hours of the compressor Number of compressor starts 1:

Hour counter		H01
Circuit 1		
	Work	Startup
Coms. 1:	0000 h	0002
Cons. 2:	0000 h	0001

Figure 37: Operating hours circuit 1

Operating hours of the compressor Number of compressor starts 2:

Hour counter	H02	
Circuit 2		
	Work	Startup
Coms. 1:	0000 h	0002
Coms. 2:	0000 h	0001

Figure 38: Operating hours circuit 2

Operating hours from the last maintenance / limit value of the operating hours for the request of maintenance:

Hour counter	H05
Compressor working time without maintenance	0 h
Maintenance required at	10000h

Figure 39: Hour counter

When a compressor exceeds the maximum threshold of operating hours, a non-blocking alarm request for maintenance is generated, which can only be reset when maintenance has been performed by a technical service technician. The KKT chillers Service Team (***see: contact details***) would be happy to assist you.

11.14. Menu Config GLT

In the Configuration GLT menu, in accordance with Figure 19: Main menu 3, all settings relating to a supervisor possibly connected to the unit can be set to control operation.

GLT config	I01a
Type:	NONE
Offline:	FORCE ON
Activ. LON factor:	NO
Activ. BAC factor:	NO
GLT table:	#1

Figure 40: Config GLT

Setting	Comment
Type	NONE / GEN. (Monitoring system at customer's expense) / STEP SWITCH / PDC SYSTEM / IRTECHMASTER / ADVANCED STEP SW. (SIR - integrated step switch) / EXPBOX
Offline	Action to be taken in case of disconnection of monitoring/timer switching FORCE OFF (the unit turns off) FORCE ON (the unit excludes monitoring and observes only the setting on the display) NONE (the unit ignores the disconnection and continues with the last received control command)
Activ. LON factor	Activates conversion in case of LonWorks® communication (can only be activated with optional board!)
Activ. BAC factor	Activates conversion in case of Bacnet® communication (can only be activated with optional board!)
GLT table	Selection of the list of variables to be displayed in monitoring

Setting the BMS port

GLT config	I02
Fieldbus connection	
Protocol:	None
Baud rate:	19200
Serial address:	1
Parity:	EVEN
Stop bits:	2

Figure 41: Setting BMS Port

Setting	Comment
Protocol	None / MODBUS / WINLOAD / MODBUS EXT
Baud rate	1200 / 2400 / 4800 / 9600 / 19200
Serial address	1÷207
Parity	NONE / EVEN / ODD
Stop bits	1 / 2

11.15. Alarm display

	ATTENTION! Always check the origin of the alarms displayed by the unit. Do not use the unit until the cause of the alarm has been found and eliminated.

	Button [ALARM] Visualise the list of active alarms. In the event of a malfunction, the corresponding LED switches on the ALARM button is red and a beep sounds.

The alarms are visualised with the following logic:

Alarm	Visualisation
There are active alarms that have not yet been viewed.	Acoustic signal + flashing LED display
There are active alarms that have already been viewed.	Permanently on LED display
There are old alarms that have not yet been viewed.	Flashing LED display

The detection of an alarm can lead to an automatic shutdown of the unit. To display the mask indicating the type of alarm that has occurred, press the ALARM button once.

Alarm	Consequence
Severe machine alarms.	Blocks the machine
Severe machine alarms or circuit alarms.	Blocks the circuit
Severe machine or circuit or compressor alarms.	Switch on the LED indicator on the display

The display will then show one or more of the following screen pages:

```
Alarms                    ALU04


Evaporator
Pump 1 Flow deficiency
```

Figure 42: Example of alarm message

Alarm type	Comment
ALXxx	Alarms Non-connection control cards.
ALBxx	Alarms Sensor faulty/not connected.
ALCxx	Alarms blocking the circuit/compressor.
ALUxx	Alarms blocking the unit.
ALDxx	Alarms Drive electronic thermostatic valve.
ALVxx	Notes.
ALGxx	Other general alarms.

Reset	**AUTO:** The alarm is automatically reset when the alarm conditions disappear.
	SEMIAUTO: The alarm is automatically reset for a maximum number of times per hour and per day.
	MAN: To reset the alarm, the user must intervene
	SVC: Alarm and reset by installer. Only carried out in the Service menu.

Note: To reset a semi-automatic alarm that has already reached the maximum number of reset attempts, or a manual alarm, press and hold the ALARM button for 5 seconds.

Table 23: Error codes

Code	Description	Reset	Action
ALB01	High pressure sensor circuit 1 damaged or disconnected	AUTO	Circuit.N OFF
ALB02	High pressure sensor circuit 2 damaged or disconnected	AUTO	Circuit.N OFF
ALB05	Low pressure sensor circuit 1 damaged or disconnected	AUTO	Circuit.N OFF
ALB06	Low pressure sensor circuit 2 damaged or disconnected	AUTO	Circuit.N OFF
ALB09	Temperature sensor input primary circuit* damaged or disconnected	AUTO	Primary off
ALB10	Temperature sensor output primary circuit* damaged or disconnected	AUTO	Primary off
ALB11	Temperature sensor input arrester** damaged or disconnected	AUTO	Unit OFF
ALB12	Temperature sensor output arrester** damaged or disconnected	AUTO	Unit OFF
ALB13	Temperature sensor input recovery damaged or disconnected	AUTO	Rec off
ALB14	Temperature sensor output recovery damaged or disconnected	AUTO	Rec off
ALB17	Outdoor temperature sensor damaged or disconnected	AUTO	Functions off
ALB18	Setpoint analog damaged or disconnected	AUTO	Functions off
ALB20	Drinking water sensor damaged or disconnected	AUTO	ACS off
ALB21	Sensor output storage tank damaged or disconnected	AUTO	No action
ALB22	Temperature sensor system damaged or disconnected	AUTO	VPF off
ALB23	Differential pressure sensor system damaged or disconnected	AUTO	VPF off
ALB24	Sensor input storage tank damaged or disconnected	AUTO	VPF off
ALB25	Differential pressure sensor primary circuit damaged or disconnected	AUTO	VPF off
ALB26	Sensor drain compressor 1 damaged or disconnected	AUTO	Comp.N off
ALB27	Sensor drain compressor 2 damaged or disconnected	AUTO	Comp.N off
ALC01	Note: Compressor maintenance N Circuit M	SVC	No action
ALC02	Compressor overload protection N Circuit M	MAN	Comp.N off
ALC03	Alarm cover	AUTO	Comp.N off

Code	Description	Reset	Action
ALC04	Circuit N Low pressure of pressure switch	SEMIAUTO	Circuit.N OFF
ALC05	Circuit N Low pressure of transmitter	SEMIAUTO	Circuit.N OFF
ALC06	Circuit N High pressure from pressure switch	MAN	Circuit.N OFF
ALC07	Circuit N High pressure of transmitter	SEMIAUTO	Circuit.N OFF
ALC10	Low pressure ratio HP/LP	SEMIAUTO	Circuit.N OFF
ALC11	Low SH circuit N	MAN	Circuit.N OFF
ALC12	LOP circuit N	MAN	Circuit.N OFF
ALC13	MOP circuit N	MAN	Circuit.N OFF
ALC14	Low suction temperature circuit N	AUTO	Circuit.N OFF
ALC17	Inverter 1 offline	AUTO	Comp.N off
ALC20	Low condensing pressure	SEMIAUTO	Circuit.N OFF
ALC22	Inverter alarm	SEMIAUTO	Comp.N off
ALC23	Overload protection fans circuit N	AUTO	Circuit.N OFF
ALD01	Driver Master sensor broken or not connected	AUTO	Circuit.N OFF
ALD05	Driver Master high condensing temperature	AUTO	Circuit.N OFF
ALD06	Driver Master Alarm EEPROM	AUTO	Circuit.N OFF
ALD07	Drive motor fault	AUTO	Circuit.N OFF
ALD08	Driver master offline	AUTO	Circuit.N OFF
ALD10	Drive battery failure	AUTO	Circuit.N OFF
ALG01	Clock card	MAN	Unit OFF
ALG02	Extended memory failed	MAN	Unit OFF
ALU02	Note: Lack of flow primary circuit with pump 1	AUTO	Primary off
ALU03	Note: Lack of flow primary circuit with pump 2	AUTO	Primary off
ALU04	Lack of flow primary circuit with pump 1	MAN	Primary off
ALU05	Lack of flow primary circuit with pump 2	MAN	Primary off
ALU06	Note: Lack of flow arrester with pump 1	AUTO	Unit OFF
ALU07	Note: Lack of flow arrester with pump 2	AUTO	Unit OFF
ALU08	Lack of flow arrester with pump 1	MAN	Unit OFF
ALU09	Lack of flow arrester with pump 2	MAN	Unit OFF
ALU10	Note: Lack of flow recovery with pump 1	AUTO	Rec off
ALU11	Note: Lack of flow recovery with pump 2	AUTO	Rec off
ALU12	Lack of flow recovery with pump 1	MAN	Rec off
ALU13	Lack of flow recovery with pump 2	MAN	Rec off
ALU16	Water temperature of primary heat exchanger below limit value for operation	SEMIAUTO	Primary off
ALU17	Water temperature recovery below limit value for operation	SEMIAUTO	Rec off
ALU18	Water temperature arrester below limit value for operation	SEMIAUTO	Unit OFF
ALU20	Alarm for low outdoor temperature	AUTO	Unit OFF
ALU21	Alarm for anti-freeze mixture primary circuit	SEMIAUTO	Primary off
ALU22	Alarm for anti-freeze mixture arrester	SEMIAUTO	Unit OFF
ALU23	Alarm for anti-freeze mixture recovery	SEMIAUTO	Rec off
ALU24	Water temperature desuperheater below limit value for operation	SEMIAUTO	DS off
ALU25	Note: Lack of air flow secondary circuit	SEMIAUTO	Unit OFF
ALU26	Lack of air flow secondary circuit	MAN	Unit OFF
ALU27	Overload protection pump secondary circuit	MAN	Unit OFF
ALV01	Defrost circuit N	AUTO	No action
ALX01	Slave circuit board disconnected	AUTO	Unit OFF
ALX04	Inverter offline	AUTO	Comp.N off
ALX05	Energy Meter offline	AUTO	Functions off
ALX06	Slave unit offline	AUTO	Unit OFF

11.16. Menu controller settings

⚠	ATTENTION! This menu may only be used by qualified personnel by entering the correct password.

Press the PRG key on the main screen to display the password entry screen and access the screens reserved for the installer or service partner.

Restricted access

Enter password

0000

Figure 43: Password entry

Please contact the KKT chillers Service Team for support (*see: contact details*).

In the Service menu, you can change the sensitive parameters that determine the behaviour of the unit and control the functions of the software. The Service menu is divided into submenus. If you press the PRG key, the main menu can be accessed. With the UP and DOWN keys you can select the desired menu and pressing the Enter key takes you go to it. To return to the previous menu, press the Esc key.

Service menu 1/12

a. Reset counter
b. Sensor calibration
c. Thermoregulation

Figure 44: Service menu 1

11.16.1. Setting the hour counter

In the Hour meter settings menu according to Figure 44: Service menu 1, it is possible to modify the counters of the operating hours and starts carried out by each compressor and also to manage the requested maintenance alarm.

```
Counter setting                    Ja01
Circuit 1

                 Work              Startup
Coms. 1          0000 h            0000 h
Coms. 2          0000 h            0000 h
```

Figure 45: Counter setting circuit 1

```
Counter setting                    Ja02
Circuit 2

                 Work              Startup
Coms. 1          0000 h            0000 h
Coms. 2          0000 h            0000 h
```

Figure 46: Counter setting circuit 2

In the Ja01 and Ja02 screens, the total number of operating hours performed by each compressor and the total number of starts can be changed.

```
Counter setting                    Ja05
Maintenance alarm


Hours limit:                       10000h
Alarm reset:                       NO
```

Figure 47: Counter setting limit

In menu Ja05, it is possible to modify the threshold of operating hours that causes the "Maintenance request" alarm to appear. It is also possible to reset the alarm that has been triggered and to reset the hour counter that causes the alarm.

11.16.2. Sensor calibration menu

In the Sensor calibration menu, according to Figure 44: Service menu 1, corrections can be made to the values read by the sensors.

Sensor adj,	Jb01a
Outdoor temperature	
Sensing period:	30s
Enable outside temp.	
Sensor:	YES

Figure 48: Sensor setting outdoor temperature

Setting	Comment
Sensing period:	Sampling interval for calculating the mean outdoor air temperature (moving average on 10 samples)
Sensor	Reset maintenance alarm and operating hours counter without maintenance

Sensor adj.	Jb01
Master sensor calibr.	
B1 offset	0.0 °C
Value:	23.8°C
B1 offset	0.0 °C
Value:	45.9°C

Figure 49: Sensor setting

In the masks Jb01 and the following masks, the acquisition correction for each individual sensor can be set and the resulting value can be read off.

11.16.3. Control / thermoregulation

If in mask Jc02 the use of the control at the return on the primary circuit has been set, masks Jc10..Jc12 appear:

Temperature reg.	Jc10
Return temp. control	
Cooling mode	
Differential:	4.0°C
Dead band:	0.0°C

Figure 50: Return temperature control

11.16.3.1. Control of the outlet temperature

If in mask Jc02 the use of the control at the outlet of the primary circuit has been set, the masks Jc13..Jc15 appear. The control of the outlet is based on the time for which the temperature is removed from the setpoint to generate the percentage of the power demand. The further away it is from the setpoint, the faster the action of increasing or decreasing the requirement will be.

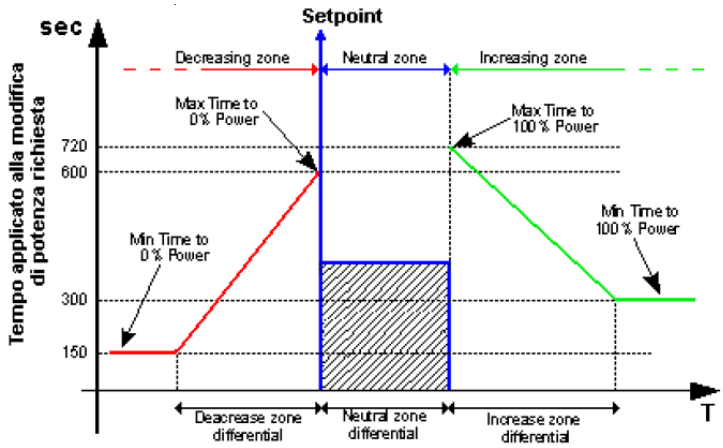

Figure 51: Control / Cooling mode

Three action zones are established:

1. The requirement is not changed in the neutral area.
2. In the increase zone, the power requirement is gradually increased, the speed of which is determined by the distance from the nominal value.
3. In the decrease zone, the power demand is gradually reduced, the speed of which is determined by the distance from the setpoint.

Temperature reg.	Jc13
Flow temp. control	
Neutr. Range:	1.2°C
Saf. Calibration:	NO
Autom. calibration:	YES
Scale factor:	100%
Steady after:	200s

Figure 52: Setting flow temperature control 1

The size of the neutral range is set via a parameter. In addition, dynamic changes can be applied due to the load conditions of the system.

Setting	Comment
Neutr. Range	Set value for the size of the neutral range
Saf. Calibration	Activation of the automatic change in the size of the neutral range based on the valuation of the system load
Autom. calibration	Activation of the automatic change of the size of the neutral range due to the ΔT exhaust / inlet unit
Scale factor	Recorded percentage of ΔT to be used as the minimum value for the size of the neutral range.
Steady after	Waiting time for operating conditions after switching on the compressors

Temperature reg.	Jc14
Flow temp. control	
Force on offset:	1.5°C
Increase zone:	2.0°C
Min. time:	300s
Max. time:	900s
Td:	60s
Td >Incr. zone:	10s

Figure 53: Setting flow temperature control 2

The rate of increase to be used is determined by the position of the temperature and the set minimum and maximum times. To determine the increase time to be used, set the times necessary to increase the power requirement from 0% to 100% when the temperature is at the edge of the neutral zone (maximum time) and when the temperature is outside the increase zone (minimum time).

Setting	Comment
Increase zone	Size of the increase zone
Min. time	Time required to increase the power requirement from 0 % to 100 % if the temperature is outside the increase zone.
Max. time	Time required to increase the power requirement from 0% to 100% when the temperature is at the edge of the neutral range.
Td	Pause time of the increase when a temperature change in the direction of the setpoint is detected
Td >Incr. zone	Interruption time of the changes of the requested performance values, if the temperature goes outside the descent range towards the setpoint value.

The parameters for the decrease zone are also set.

Temperature reg.	Jc15
Flow temp. control	
Decrease zone:	4.0°C
Min. time:	300s
Max. time:	600s

Figure 54: Setting flow temperature control 3

Setting	Comment
Decrease zone	Size of the decrease zone
Min. time	Time required to reduce the power requirement from 100% to 0% if the temperature is outside the increase zone.
Max. time	Time required to reduce the power requirement from 100% to 0% when the temperature is at the edge of the neutral range.

11.16.3.2. Compressor times menu

Temperature reg.	Jc31
Compressor minimum time	
-between diff.	
Compressors start:	10s
-between diff.	
Compressor off:	2s

Figure 55: Compressor switching times

A minimum time interval can be set in order to avoid switching on and off, which would put a strain on the electrical system.

Setting	Comment
Between diff. Compressors start	Minimum time between switching on two different compressors
Between diff. Compressor off	Minimum time between switching off two different compressors

11.16.3.3. Maximum outlet temperature menu

In the masks Jc32..Jc34 the safety thresholds can be set beyond which the operation of the system is stopped.

Temperature reg.	Jc34
Primary management	
Max. outlet temp:	70 °C
Difference:	5°C

Figure 56: Max. outlet temperature

Setting	Comment
Max. outlet temp.	Threshold output temperature of primary circuit beyond which production is stopped (only with control at return flow)
Difference	Difference below which the temperature must drop to reactivate the control

11.16.3.4. Pump Down

Temperature reg.	Jc40
Pump down	
Activation:	NO
Max. time:	60s
And threshold	4.0bar

Figure 57: Pump don setting

In the Jc40 mask, the pump-down function, which closes the EVV expansion valve before the compressors switch off on request, can be used to draw in most of the refrigerant entering the compressor. When pump-down is activated, the compressor delays shutdown until a low pressure threshold or maximum time is reached. In the latter case, the fault is recorded in the alarm log.

11.16.3.5. Tank heater setting menu (only with integrated hydraulic module option)

With the tank heater integrated in the hydraulic module, the internal accumulator of the refrigeration system is kept at temperature in winter with a double-step resistor.

Temperature reg.	Jc41
Electric auxiliary heater	
Outdoor temperature	
Threshold 1:	5.0°C
Threshold 2:	-1.0°C
Tank outlet temperature	
Setpoint:	10.0°C
Difference:	10.0°C

Figure 58: Heating setting

Setting	Comment
Outside temp. Threshold 1	Outdoor temperature threshold below which the first heating step is activated
Outside temp. Threshold 2	Outdoor temperature threshold below which the second heating step is activated
Outlet temp. Setpoint	Heating activation threshold
Outlet temp. Difference	Difference for heating shutdown

11.16.4. Setpoint limits menu

Service menu	4/12
c. Thermoregulation	
d. Setpoint limits	
e. Pumps	

Figure 59: Service menu 2

In the Setpoint limits menu, you can define the ranges within which the user can move.

Setpoint limits	Jd01
Cooling setpoint limit	
Minimum setpoint 1:	7.0°C
Maximum setpoint 1:	17.0°C
Minimum setpoint 2:	7.0°C
Maximum setpoint 2:	17.0°C

Figure 60: Setting setpoint limit 1

Setting	Comment
Minimum setpoint 1	Minimum limit and maximum limit for setting the operating setpoint in cooling mode
Maximum setpoint 1	
Minimum setpoint 2	Limits of setpoint 2 (only for external setpoint input → Option / not available in the standard version)
Maximum setpoint 2	

11.16.5. Menu pumps / primary pump (optional hydraulic module)

Pumps	Je01
Evaporator pump	
Mode:	UPON REQUEST
Enable antiblock:	YES
Pre-circulation:	20s
Modulation delay:	10s
From delay:	20s

Figure 61: Setting pump 1

Setting	Comment
Mode	Operating mode of the primary circuit pump: **ALWAYS ACTIVE**: The pump is kept on when the unit is on and there are no blocking alarms. **ON REQUEST**: In case of longer compressor downtimes, the pump is temporarily switched off (see mask Je4).
Enable antiblock	Activation of the function against blocking, whereby 30" forced operation of the pump is requested if stopped for 7 days.
Pre-circulation	Minimum delay between pump start-up and compressor start-up
Modulation delay	Minimum delay between pump start-up
From delay	Minimum forced operation time of the pump after all compressors or the unit have been switched off (run-on time).

Pumps	Je02
Check evaporator pump water flow	
Alarm delay	
- At start-up	15s
- While running	3s
- Between 2 attempts	10s

Figure 62: Pump delay times

Setting	Comment
at start-up	Alarm (flow rate) delay at pump start
while running	Alarm (flow rate) delay during pump operation
between 2 attempts	Interval between attempts to switch on the pump when the flow rate is low

Only in pump mode **ON REQUEST mode**

Pumps	Je04
Evaporator pump	
Times	
Idle time:	5m
Flushing time:	15s
Pause time:	5m

Figure 63: Pump setting in "On request" mode

Setting	Comment
Idle time	Compressor standstill time after which the pump is switched off and the unit is paused
Flushing time	Time of forced pump operation due to temperature measurement
Pause time	Pause time between two water temperature analyses

11.16.6. Condensation control menu

Service menu	4/12
e. Pumps	
f. Condensation control.	
g. Defrost	

Figure 64: Service menu 3

The control of the fans can be carried out in the menu Condensation control.

Condensation control is performed by modulating the fan speed with a 0-10 V signal based on the condensing pressure. With normal control, the fans switch on at the minimum speed when the pressure exceeds the set point and then accelerate to the maximum control speed when the set difference is exceeded.

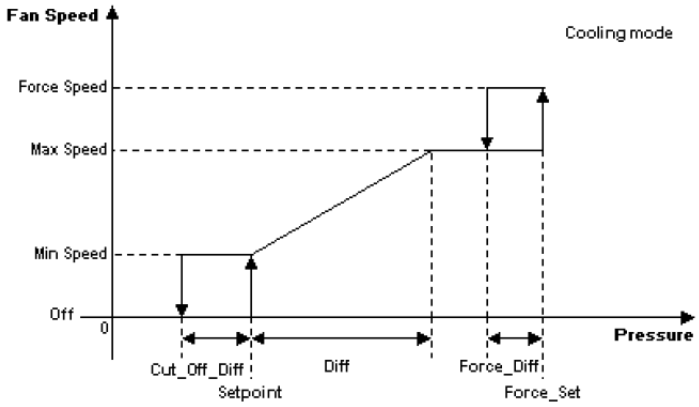

Figure 65: Fan speed control

```
Condensation control.                    Jf04
Condenser fan
In KWS mode

Setpoint:   7.0bar    →    -0.2°C
Diff:       7.0bar    →    21.3°C
Cut-Off:                   1.0bar
```

Figure 66: Setting of the fans for chiller mode

Setting	Comment
Setpoint	Pressure set point for switching on the fans
Diff	Scope of the control range from minimum speed to maximum speed
Cut Off	Cut-off shut-down time

11.16.7. Prevention menu

```
Service menu                    8/12


g. Defrost
h. Prevention.
i. Alarm
```

Figure 67: Service menu 4

In the Preventions menu, it is possible to modify the parameters of the functions that limit the power supplied to the circuits in order to avoid alarm situations.

For units with On/Off compressors, prevention reduces the maximum number of compressors operating on the circuit until the conditions below the set point set for prevention or a minimum value are reached.

11.16.7.1. High pressure prevention

Prevention	Jh02
High pressure prevent.	
Threshold:	17.5bar
Difference:	1.0bar
Warning delay:	1s
Forced shutdown. Quantity:	1

Figure 68: Compressor shutdown high pressure

Setting	Comment
Threshold	High pressure threshold in relation to the threshold above which the performance of the circuit is reduced.
Difference	Difference in relation to the exceeding of the threshold after which the performance of the circuit is reduced
Warning delay	Delay in relation to exceeding the threshold after which the performance of the circuit is reduced
Forced shutdown. Quantity	Maximum number of forced compressor shutdowns with remaining minimum On time in a timeframe of 60 minutes.

11.16.7.2. Low pressure prevention

Prevention	Jh04
Low pressure prevent.	
Threshold:	1.0bar
Difference:	2.0bar
Warning delay:	1s
Forced shutdown. Quantity:	1

Figure 69: Compressor switch-off low pressure

When activated, low pressure prevention behaves in the same way as high pressure prevention by reducing the performance of the circuit when the low pressure drops below the set threshold. Note: Usually deactivated and replaced in relation to the functions of the action of LOP of the thermostatic valve.

11.16.7.3. Prevention anti-freeze mixture

Prevention	Jh06
Anti-freeze mixture prevent.	
Threshold:	4.0°C
Difference:	2.0°C
Warning delay:	1s
Forced shutdown. Quantity:	1

Figure 70: Compressor shutdown anti-freeze mixture

When activated, antifreeze prevention behaves in the same way as for high pressure, reducing the performance of all circuits when the output temperature of the primary circuit drops below the set threshold. Note: Usually deactivated and replaced by the temperature control action in relation to the functions.

11.16.7.4. Prevention power consumption

Prevention	Jh14
Overcurrent prevent.	
Threshold:	100A
Difference:	2.0A
Warning delay:	1s
Forced shutdown. Quantity:	1

Figure 71: Compressor shutdown power consumption

The prevention of power consumption behaves in the same way as the previous ones by gradually reducing the power of the compressor.

11.16.8. Alarms menu

In the Alarms menu (see Figure 67: Service menu 4), it is possible to modify the parameters relating to the limit values of the machine operating conditions above which the compressors are forced to switch off. The alarms cannot disappear until the conditions that triggered them are no longer present.

As described in chapter 11.15 (Alarm display), the automatic resetting of alarms can only be carried out if the correct conditions are restored, but manually by pressing the alarm key for a long time or semi-automatically. In this case, a maximum number of executable automatic resets can be set in the time window of one hour and for some for 24 hours: This ensures that the unit can restart independently after some alarm situations, but that these cannot be repeated as often in order not to compromise long-term reliability.

11.16.8.1. Low pressure alarm

The low pressure alarm has no fixed threshold in cooling mode, which is variable due to the output temperature from the primary heat exchanger. The colder the water, the lower the alarm threshold. To achieve this floating threshold, the alarm threshold is determined when the temperature is -8°C and +7°C; the threshold is then calculated by interpolating the straight line passing through these two points to a limit of -10°C and +15°C. The threshold is then set to a value of -8°C and +7°C, respectively. The same procedure is used to determine the threshold of the LOP alarm.

Alarm	Ji01
Low pressure alarm	
Threshold (CH-8°C):	2.3bar
Threshold (CH+7°C):	4.7bar
Threshold (WP):	2.2bar
Difference:	0.7bar
Start delay	60s
Start-up delay:	5

Figure 72: Low pressure alarm / threshold

Setting	Comment
Threshold (CH-8°C)	Threshold low pressure alarm with circuit in cooling mode and temperature output primary circuit equal to -8 °C
Threshold (CH+7°C)	Threshold low pressure alarm with circuit in cooling mode and temperature output primary circuit equal to 7 °C
Threshold (WP)	Threshold low pressure alarm with circuit in heating mode or switched off
Difference	Difference for resetting the alarm
Start delay	Alarm delay in relation to circuit activation
Start-up delay	Alarm delay during operation

The following graph shows the course of the Low Pressure Alarm (LP) and LOP alarm threshold. The points set on the level in the example mask are pointed out.

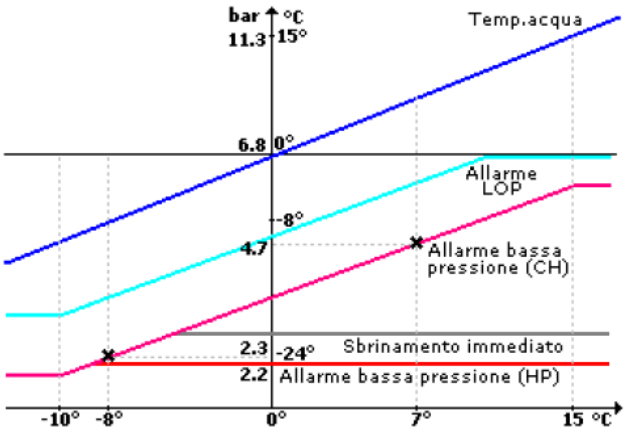

In mask Ji03 the possible number of resets for the low pressure alarm of the converter can be set. However, the low pressure alarm from the pressure switch must be reset manually.

Alarm	Ji03
ND alarm reset	
-Cooling mode	
Max. resets/hour:	3
Max. resets/day:	7
-Heating mode:	
Max. resets/hour:	1
Max. resets/day:	7

Figure 73: Setting / Frequency ND alarm

11.16.8.2. High pressure alarm

In mask Ji04 you can set the threshold that determines the high pressure alarm (which is triggered without delay), as well as the number of automatic resets allowed. The high pressure alarm from the pressure switch, on the other hand, must be reset manually and, in addition to pressing the alarm button for a longer time, the mechanical pressure switch must be unlocked manually.

Alarm	Ji01
High pressure alarm	
Threshold:	18.5bar
Difference:	2.0bar
Max. resets/hour:	1

Figure 74: High pressure alarm settings

11.16.8.3. Alarm for anti-freeze mixture

For each heat exchanger, the output temperature threshold below which the alarm is generated can be set. The electrical resistance, which prevents the formation of ice on the heat exchanger, is activated when the compressors are switched off on the basis of the setpoint, before the alarm threshold is reached. Together with the resistor, the pump is also activated when it is switched off.

Alarm	Ji06
Anti-freeze mixture alarm	
Primary	
Threshold:	3.0°C
Difference:	2.0°C
Max. resets/hour:	0
Max. resets/day:	0

Figure 75: Anti-freeze mixture alarm settings

Alarm	Ji06
Anti-freeze mixture heating	
Primary	
Offset of anti-freeze mixture	
Threshold:	1.0°C
Difference:	1.0°C

Figure 76: Heating setting

With the data given in the example masks, the electrical resistor is activated together with the circulation pump at 4 °C, then the antifreeze mixture alarm is triggered at 3 °C.

11.16.8.4. Coolant media alarm / application limits

In order to use the machine within the operating ranges of the compressors, the water supplied to the unit must not be too high or too low. If these limits for water are not respected, the unit may go into alarm mode (usually low evaporating pressure or high/low condensing pressure). If such alarms occur while the leaking water is not within the set limits, a message will appear on the display and the alarm "Water temperature outside operating limits" will be added to the alarm log.

Alarm	Ji15
Limits of use	
Water limit temperature	
Max. cooling mode:	25.0°C
Max. heating mode:	25.0°C
Min. desuperheater:	45.0°C
Max. resets/hour:	9

Figure 77: Limit value coolant media

11.16.8.5. Low condensing pressure alarm

In the masks Ji20 and Ji21, the condensing low pressure alarm can be activated and the parameters for the trip threshold, the intervention bypass and the number of automatic resets allowed per hour and per day can also be set.

Alarm	Ji20
Low	
Condensing pressure	
Threshold:	5.0bar
Start delay:	180s
Start-up delay:	60s

Figure 78: Low condensing pressure Settings

Alarm	Ji21
Low	
Condensing pressure	
Activation:	NO
Max. resets/hour:	1
Max. resets/day:	3

Figure 79: Low condensing pressure settings

11.16.8.6. Alarm for low outdoor temperature

The outdoor environment must not be too cold in order to maintain the operating range of the compressors of the chillers. In mask Ji22, you can set the thresholds of the minimum external temperature necessary for correct operation in cooling mode.

Alarm	Ji22
Outdoor temperature	
Lower limit value	
Threshold (CH):	-10.0°C
Threshold (WP):	-10.0°C
Difference:	8.0°C
Activation:	YES

Figure 80: Outdoor temperature alarm setting

11.16.8.7. Alarm offline

In mask Ji26, you can set how long any disconnections or communication problems with the serial devices should be ignored (EVD driver, inverter, EnergyMeter, etc.). The bypass at startup is applied when the circuit board is turned on and is usually longer than the bypass taken into account during operation.

Alarm	Ji22
Offline alarms	
Start delay	30s
Start-up delay:	15s

Figure 81: Alarm delay

11.16.8.8. LowSH/LOP/MOP alarms

In masks Ji31 and Ji32, the number of resets per hour and per day can be set for alarms LowSH (low superheat), LOP (low operating pressure) and MOP (high operating pressure). The threshold and delay parameters are included in the menu 0.

Alarm	Ji31
LowSH alarms	
Max. resets/hour:	1
MOP alarms	
Max. resets/hour:	1

Figure 82: LowSH and MOP alarms

Alarm	Ji32
LOP alarms	
Max. resets/hour:	3
Max. resets/day:	7

Figure 83: LOP alarms

11.16.9. EEV menu - Electronic expansion valve

Service menu	8/12
i. Alarm	
j. EEV	
k. Parameter reset	

Figure 84: Service menu 4

In the EEV menu, you can modify the parameters that change the operation of the expansion valve and the related alarms.

When the circuit is started, the electronic thermostatic valve opens to a percentage proportional to the power to be switched on and to the EEV ratio parameter described in mask Jj31 before the compressors are activated. The opening obtained in this way is maintained even after switching on (repositioning time), then the valve regulates with a PID algorithm to maintain the set superheat setpoint on the circuit. The valve positions itself on openings with fixed percentages, even after other compressors have been switched on/off. The parameters can be set differently for each circuit and operating mode.

In order to avoid superheating of the gas due to long downtimes of the machine from the environment, the function for time-controlled forced opening can be activated in mask JJ04.

EEV valve	Jj04
Det. Standby op.	NO
Standby time:	16h
Opening time:	20s
Enabl. LTE LowSH:	Yes
Outside temperature threshold:	-8.0°C

Figure 85: Setting expansion valve 1

Setting	Comment
Det. Standby op.	Activation of time-controlled opening of EEV at longer standstill
Standby time	Standstill hours hours of the unit for activating the function
Opening time	Duration of forced opening
Difference	Duration of forced opening
Enabl. LTE LowSH:	Activate the use of a different superheat setpoint when heating with low outdoor temperatures.
Outdoor temp. sw.	Outdoor temperature threshold below which the superheat setpoint is changed

EEV valve	Jj11
Circuit 1 (cooling)	
Superheating setpoint.:	5.0K
-during recovery:	5.0K
-partialised:	5.0K

Figure 86: Setting expansion valve 2

Setting	Comment
Superheat setpoint	Superheat set point to be maintained for operation
-during recovery	Superheat setpoint to be used when operating with activated heat recovery (not provided in Evo Line)
-partialised	Superheat setpoint to be maintained at a power output of 50 % or less of the total power output.

During operation, the EVD driver (actuator) is instructed to avoid superheating or pressure exceeding the set limits. When one of these thresholds is exceeded, a different integral time is first used on the control PID to make it more responsive, and after a maximum time the alarm is generated.

It should be noted that due to the correspondence between pressure and temperature of a gas, the LOP and MOP thresholds are set in °C instead of bar. The same happens with the low pressure alarm, and the LOP threshold also depends on the water outlet temperature: To determine the threshold to be used, the LOP thresholds to be applied are set when the water has a temperature of -8°C and +7°C and the resulting threshold is calculated on the straight line passing through this point (up to the limits of -10°C and +15°C).

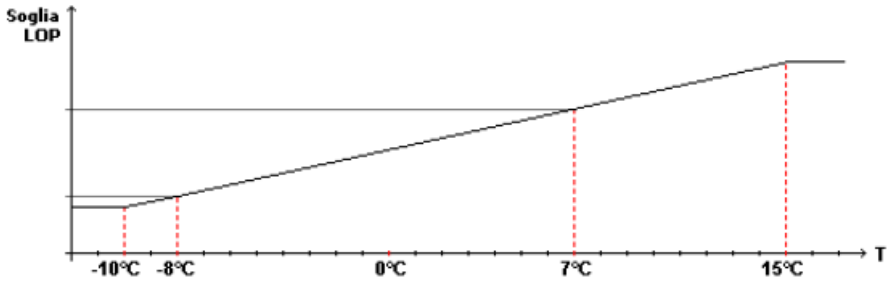

EEV valve	Jj21
Circuit 1 (cooling)	
Low super.:	2.0K
LOP thresh. (-8C):	-16.0°C
LOP thresh. (+7C):	-3.0°C
MOP threshold:	15.0°C

Figure 87: Setting expansion valve 3

Setting	Comment
Low superheat	Threshold value alarm low superheat (LowSH). When the superheat drops below the set threshold, the integral time of the PID is changed to make it more responsive and after a maximum time the low superheat alarm is generated.
LOP thresh. (-8C)	Low operating pressure alarm threshold (LOP) to be used at low temperature (-8°C).
LOP thresh. (+7C)	Low operating pressure alarm threshold (LOP) to be used under normal conditions (+7°C).
MOP threshold	High operating pressure alarm threshold (MOP)

In mask Jj31 the parameter of the percentage of valve opening at start can be set (EVV Ratio). Please note that this parameter is used together with the power percentage to be switched on to determine the opening position of the valve. For example: In a circuit with two compressors and EEV Ratio parameters equal to 50%, the first compressor (50% of the circuit capacity) switches on at an opening equal to [minimum opening] + [50% x 50% = 25% of operating range].

EEV valve	Jj31
Circuit 1 (cooling)	
Valve opening	
at start-up	
(at -8C):	50%
(at +7C):	50%

Figure 88: Setting expansion valve 4

In mask Ji41, the proportional, integrative and derivative parameters of the PID algorithm that regulates the opening of the valve under normal control can be set. Increasing these parameters makes the valve more stable, while decreasing them makes it more reactive.

EEV valve	Jj41
Circuit 1 (cooling)	
PID parameter	
Prop. incr.:	15.0
Integral time:	150s
Derivative time:	5s

Figure 89: Setting expansion valve 5

Mask Jj51 is used to set the delays related to the persistence of superheating and pressure above the alarm thresholds for generating an alarm.

EEV valve	Jj51
Circuit 1 (cooling)	
Alarm delay	
LowSH.:	300s
LOP:	300s
MOP:	600s

Figure 90: Setting expansion valve 6

The threshold and the delay of the low suction temperature alarm are set in mask Jj61.

EEV valve	Jj61
Circuit 1 (cooling)	
Alarm min. intake pressure temperature	
Threshold:	-50.0°C
Timeout:	300s

Figure 91: Setting expansion valve 7

11.16.10. Default settings / Factory reset menu

In the Parameter reset menu (see Figure 67: Service menu 4), you can reset all parameters in the Customer service menu and return them to their original factory values.

EEV valve	Jk01
Factory parameter Restore:	NO
Last backup:	15.07.2019

Figure 92: Setting parameter reset / factory settings

Setting	Comment
Factory parameter Restore	Select YES and confirm with Enter to start the reset.
Last backup	Date Parameter storage (coincides with the date of the first activation of the unit)

It is also possible to force the transfer of parameters from the electronic control to the inverter board in mask Jk02.

11.16.11. Manual mode menu

Service menu	12/12
j. EEV	
k. Parameter reset	
l. Manual mode	

Figure 93: Service menu 5

In the Manual mode menu, manual procedures such as deactivating compressors and manually changing the status of relay outputs and analog outputs can be performed. It is recommended not to use these functions too often, but only when absolutely necessary.

The use of some compressors can be activated/deactivated in the JI02-03 masks. If a compressor is deactivated, its activation is never requested.

Manual mode	JI02
Deactiv. Compressor	
Coms. 1 circuit 1:	NO
Coms. 2 circuit 1:	NO

Figure 94: Manual compressor shutdown 1

Manual mode	JI03
Deactiv. Compressor	
Coms. 1 circuit 2:	NO
Coms. 2 circuit 2:	NO

Figure 95: Manual compressor shutdown 2

In mask JI06 and following the status of the digital relay outputs of the electronic board can be changed. To do this, go to the AUTO field and change it to MAN with the Up / Down keys, then confirm with Enter. This way, the status of the output can be edited and it is possible to change it from OPEN to CLOSED with the Up /Down keys.

Manual mode		JI06
Digital output		
Compressor 1 C1		
AUTO:	m/NO1:	Open
Compressor 2 C1		
AUTO:	m/NO2:	Open
Fan contactor C1		
AUTO:	m/NO3:	Open

Figure 96: Digital outputs setting

The status of the analogue outputs of the board can be forced in the mask JI20 and following. For this, go to the AUTO field and change it to MAN with the UP / Down keys, confirm with Enter, then it is possible to change the voltage value to be delivered as desired, expressed in hundredths of a volt (0 = 0 V, 1000 = 10 V).

Manual mode		JI20
Analog output		
Valve sp. defrost C2		
AUTO	m/Y1:	0cV
Not used		
AUTO	m/Y2:	0cV

Figure 97: Setting analog outputs

In the mask JI24 and following the opening of the electronic thermostatic valve can be forced manually, this is expressed in steps of the stepper motor.

Manual mode	JI24
EEV circuit 1	
Manual valve	
Positioning:	NO
Manual valve	
Position:	0step

Figure 98: Manual mode expansion valve

12. Hardware – Configuration

12.1. Description of the card / circuit board

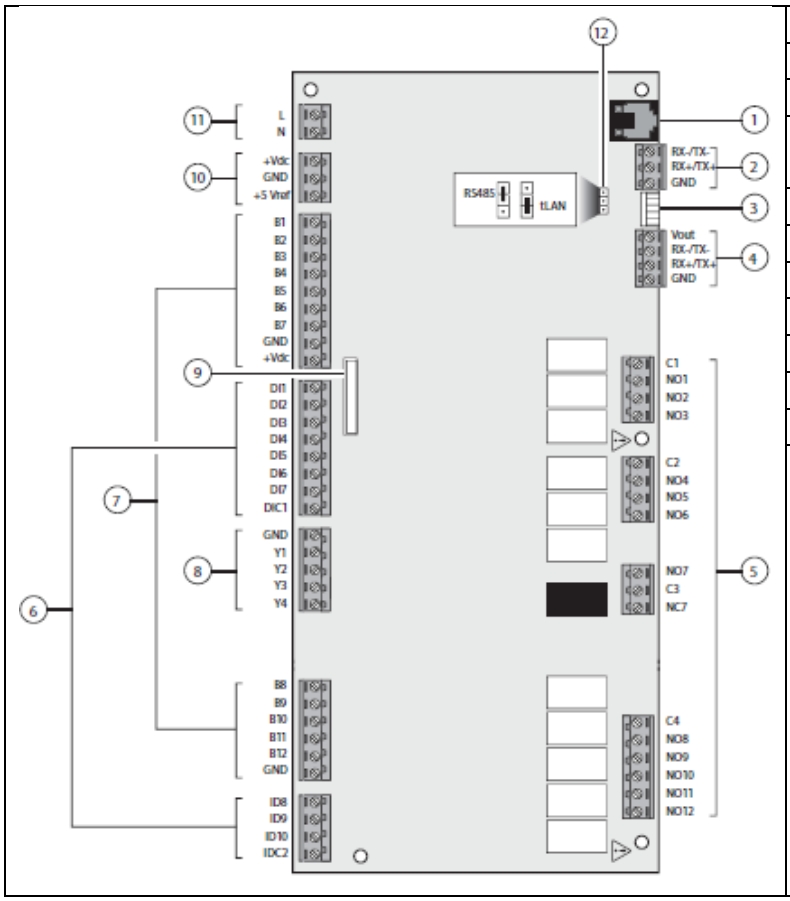

1: Connector for terminal
2: Serial connection master card
3: Connector terminal PLD
4: Serial connection Actuator Electronic thermostatic valve
5: Relay digital output
6: Digital input
7: Analog input for sensor
8: Analog output
9: Serial card
10: Supply for external sensor
11: Power supply 230Vac
12: Jumper tLAN/RS485 (default tLAN)

12.2. Configuration of inputs and outputs for eBoxX260 to eBoxX300

Analog inputs		
Pin	**Type**	**Description**
B1	NTC	Outdoor temperature (can be activated)
B2	NTC	Temp. In. Recovery/DS (option RC100/DS)
B3	NTC	Temp. input primary circuit
B4	NTC	Temp. output primary circuit
B5	-	
B6	0-5 V	Low pressure converter circuit 1
B7	0-5 V	High pressure converter circuit 1
B8	NTC	Probe BWW/Request ACS-RC100-DS (can be activated)
B9	NTC	Temp. output buffer memory (option RIS)
B10	4 – 20 mA	Analog setpoint 4-20 mA (option CS)
B11	0-5 V	Force noise reduction FNR1 (Option FNR)
B12	NTC	Temp. output recovery (option RC100

Digital inputs		
Pin	**Type**	**Description**
ID1	24 Vac	High-pressure pressure switch circuit
ID2	24 Vac	Activation of frequency reduction (option FDL)
ID3	24 Vac	Overload protection compressor 1 circuit 1
ID4	24 Vac	Overload protection compressor 2 circuit 1
ID5	24 Vac	Primary differential pressure switch
ID6	24 Vac	On/Off remote control (SCR)
ID7	24 Vac	Double setpoint (option DSP)
ID8	24 Vac	Differential pressure switch recovery (option RC100)
ID9	24 Vac	Selector switch summer/winter (SEI)
ID10	24 Vac	Force noise reduction FNR1 (Option FNR)

Digital outputs		
Pin	**Type**	**Description**
NO1	24 Vac	Compressor 1 Circuit 1
NO2	24 Vac	Compressor 2 Circuit 1
NO3	24 Vac	Fan Circuit 1
NO4	24 Vac	Primary pump 1
NO5	24 Vac	Anti-freeze mixture heating/heat exchanger
NO6	24 Vac	Cycle switching valve circuit 1 (VQ1)
NO7	24 Vac	General alarm
NO8	24 Vac	Pump 2 recovery /DS (option RC100/DS)
NO9	24 Vac	Pump 2 primary circuit (option DP)
NO10	24 Vac	Solenoid valve recovery circuit 1 (VSR1) (option RC100)
NO11	24 Vac	Valve ACS
NO12	24 Vac	Pump 1 recovery/DS (optional) RC100/DS) / KRIT / KRIA / boiler

Analog outputs		
Pin	**Type**	**Description**
Y1	0 – 10 Vdc	Control levels resistors (option RIS)
Y2	0 – 10 Vdc	Modulation system pump (option VPF)
Y3	0 – 10 Vdc	Fan speed circuit 1

12.3. Configuration of inputs and outputs for eBoxX350 to eBoxX530

Analog inputs		
Pin	**Type**	**Description**
B1	NTC	Outdoor temperature (can be activated)
B2	NTC	Temp. In. Recovery/DS (option RC100/DS)
B3	NTC	Temp. input primary circuit
B4	NTC	Temp. output primary circuit
B5	NTC	Selector switch summer/winter (SEI)
B6	0-5 V	Low pressure converter circuit 1
B7	0-5 V	High pressure converter circuit 1
B8	NTC	Probe BWW/Request ACS-RC100-DS (can be activated)
B9	NTC	Temp. output buffer memory (option RIS)
B10	4 – 20 mA	Analog setpoint 4-20 mA (option CS)
B11	0-5 V	Low pressure converter circuit 2
B12	NTC	High pressure converter circuit 2

Digital inputs		
Pin	**Type**	**Description**
ID1	24 Vac	High-pressure pressure switch circuit
ID2	24 Vac	Activation of frequency reduction (option FDL)
ID3	24 Vac	Overload protection compressor 1 circuit 1
ID4	24 Vac	Overload protection compressor 2 circuit 1
ID5	24 Vac	Primary differential pressure switch
ID6	24 Vac	On/Off remote control (SCR)
ID7	24 Vac	Double setpoint (option DSP)
ID8	24 Vac	Overload protection compressor 1 circuit 2
ID9	24 Vac	Overload protection compressor 2 circuit 2
ID10	24 Vac	High-pressure pressure switch circuit 2

Digital outputs		
Pin	**Type**	**Description**
NO1	230 Vac	Compressor 1 Circuit 1
NO2	230 Vac	Compressor 2 Circuit 1
NO3	230 Vac	Fan Circuit 1
NO4	230 Vac	Primary pump 1
NO5	230 Vac	Anti-freeze mixture heating/heat exchanger
NO6	230 Vac	Cycle switching valve circuit 1 (VQ1)
NO7	230 Vac	General alarm
NO8	230 Vac	Compressor 1 Circuit 2
NO9	230 Vac	Compressor 2 Circuit 2
NO10	230 Vac	Cycle switching valve circuit 2 (VQ2)
NO11	230 Vac	Valve ACS
NO12	230 Vac	Fan Circuit 2

Analog outputs		
Pin	**Type**	**Description**
Y1	0 – 10 Vdc	Control levels resistors (option RIS)
Y2	-	
Y3	0 – 10 Vdc	Fan speed circuit 1
Y3	0 – 10 Vdc	Fan speed circuit 2

13. Maintenance

Reliable operation and a long service life for the entire system can be guaranteed by proper maintenance.

The purpose of the maintenance is:

- to ensure that the machine operates reliably and without unexpected failures
- to plan further service work in order to minimise downtimes

An overview of the recommended maintenance intervals can be found in the following table. In addition, the national regulations of the respective installation site must be followed.

Please note that the points listed represent the minimum maintenance required. By increased monitoring, system reliability can be enhanced. Our service department would be pleased to provide you with maintenance offers / maintenance agreements at any time.

Table 24: Maintenance intervals

	Components	Time interval	Comments
1.	Cleaning and general control Oo the device	Perform a general cleaning of the machine every 6 months and check the condition of the machine.	Any existing rust spots should be painted with protective lacquer.
10.	**Compressor**		
11.	Visual inspection for dirt, damage and corrosion	When needed - at least every 6 months.	
12.	Check fixing, check running noises	At least every 6 months.	
13.	Measure the intake pressure	At least every 6 months.	
14.	Measure the suction gas temperature upstream of the compressor	At least every 6 months.	
15.	Measure the compression end temperature at the discharge port	At least every 6 months.	
16.	Check oil level	At least every 6 months.	The lubricating oil level in the compressor can be checked via the sight glasses.
17.	Check the acid content of the oil (acid test)	When needed	
18.	Oil change	When needed	
19.	Check that the crankcase heater is working	At least every 6 months.	
20.	Check that the output control is working	At least every 6 months.	
21.	Check the refrigerant side for leaks.	At least every 6 months.	
22.	Check high/low pressure switching equipment	At least every 6 months.	
30.	**Air-cooled condenser**		
31.	Fin-packed heat exchangers	When needed - at least every 6 months.	The heat exchangers must be kept free of blockages. If necessary, they must be washed with detergents and water. Brush the heat exchangers carefully without damaging them. Always use personal protective equipment as required by law (goggles, ear protection, etc.).

32.	Fans	When needed - at least every 6 months.	The grilles of the fans must be kept free of blockages.
33.	Check electrical connection of fan	When needed - at least every 6 months.	The engine must be kept clean and must not show any traces of dust, dirt, oil or other impurities. This can lead to superheating due to insufficient heat dissipation. The bearings are generally watertight, permanently lubricated and designed for a service life of approximately 20,000 hours under normal operating and environmental conditions.
34.	Measure the condensing temperature	At least every 6 months.	
35.	Measure the refrigerant side supercooling temperature at the condenser outlet	At least every 6 months.	
36.	Measure the medium temperature at condenser inlet and outlet	At least every 6 months.	
37.	Check that the condensation pressure control is functioning properly	At least every 6 months.	
38.	Check the refrigerant side for leaks.	At least every 6 months.	
40.	**Evaporator**		
41.	Visual inspection for dirt, damage and corrosion	At least every 12 months	
42.	Check pressure loss	At least every 6 months.	Any incrustation of the heat exchangers can be detected by measuring the pressure loss with a differential pressure gauge between the inlet pipes and the outlet of the unit.
43.	Measure refrigerant superheating temperature	At least every 6 months.	
44.	Measure the medium temperature at the evaporator inlet and outlet	At least every 6 months.	
45.	Measure the anti-freeze temperature (freezing point) of the heat transfer media	At least every 6 months.	
46.	Check the water and refrigerant side for leaks	At least every 6 months.	
50.	**Refrigeration circuit**		
51.	Visual inspection for dirt, damage and corrosion	When needed - at least every 6 months.	
52.	Check insulation for damage	When needed - at least every 6 months.	
53.	Check filter dryer for blockage	When needed - at least every 6 months.	
54.	Replace filter dryer	When needed	When components in the refrigeration circuit are replaced
60.	**Refrigerant circuit**		
61.	Visual inspection for dirt, damage and corrosion	When needed - at least every 6 months.	
62.	Check the safety function of the safety switching	When needed - at least every 6 months.	
63.	Check pump/mechanical seal for leaks	When needed - at least every 6 months.	

64.	Check filling level / standstill pressure	When needed - at least every 6 months.	
65.	Check diaphragm expansion vessel	When needed - at least every 6 months.	
66.	Water filter (if available - external)	At least every 6 months.	This filter must be cleaned regularly.
70.	**Control cabinet**		
71.	Visual inspection for dirt, damage and corrosion	When needed - at least every 6 months.	In addition to checking the various electrical components, check the insulation of all cables and their tight fit on the terminal strips, paying particular attention to the earthing connections.
72.	Check fastening	At least every 6 months.	
73.	Check all threaded connections	At least every 6 months.	
74.	Check all indicator lights and error messages	At least every 6 months.	
75.	Check that the temperature and pressure sensors are functioning properly	At least every 6 months.	
76.	Check the function of the motor protection switches	At least every 6 months.	
77.	Check control cabinet heater	At least every 6 months.	
80.	**Documents and labelling**		
81.	All documents such as operating manual, diagrams, circuit plans, system log are present	At least every 12 months.	
82.	Nameplate and labels are clearly legible	At least every 12 months.	

14. Cleaning and general inspection of the device

14.1. Condenser

In order to maintain high performance, the microchannel heat exchanger must be cleaned annually when visibly contaminated, but at least once a year at ½. To do this, disconnect the unit from the power supply and remove any condenser protection grilles. First of all, remove coarse dirt particles from the outside using a standard vacuum cleaner. Then flush the microchannel heat exchanger carefully, in the opposite direction to the air flow, from inside with warm tap water. Then clean with a wet vacuum cleaner until the surface is dry again.

14.2. Condenser with ElecroFin® coating (option)

The following cleaning procedures are recommended as part of the regular maintenance of ElectroFin®-coated condensers. To maintain warranty coverage, ElectroFin®-coated condensers must be regularly serviced and registered.

It is recommended that water chillers used in coastal or industrial areas are rinsed monthly with water to remove chlorides, dirt and deposits. It is essential that the water used for rinsing has a maximum temperature of 54°C and a maximum pressure of 62 barg to prevent damage to the fin edges.At least every 6 months. A high water temperature (max. 54 °C) reduces the surface tension, which makes it easier to remove chlorides and dirt.

Quarterly cleaning is essential to extend the life of ElectroFin®-coated condensers and maintain the warranty. Cleaning the coated condenser must be part of the unit's regularly scheduled maintenance activities. Failure to clean the ElectroFin®-coated condenser will void the warranty and could reduce both performance and life of the unit. Before regular quarterly cleaning, the condenser must be cleaned with the approved special cleaner (see list of approved products). After cleaning with the approved special cleaner, the approved chloride remover must be used (see Recommended Chloride Removers) to remove soluble salts and revitalize the unit.

The following detergent has been approved for cleaning condensers with ElectroFin® e-coating to remove mould, dust, soot, greasy residues, lint and other particles, provided it is used in accordance with the preparation and cleaning instructions on the packaging:

Product	Dealer	Product code
Enviro-Coil Concentrate	HYDRO-BALANCE CORPORATION TELEPHONE: 800 527-5166 FAX: 972 394-6755 P.O. Box 730 Prosper, Texas 75078	H-EC01
Enviro-Coil Concentrate	Home Depot Supply	H-EC01

Recommended chloride remover

CHLOR*RID International, Inc PO Box 908 Chandler, Arizona 85244 / Tel.:(800) 422-3217 Fax: (480) 821-0364

CHLOR*RID DTS™ is recommended for the removal of soluble salts from ElectroFin®-coated condensers, strictly following the instructions for use. This product is not suitable for use as a degreaser. Grease or oil films must always be removed beforehand with a suitable cleaning agent.

1. Barrier removal - The soluble salts adhere to the substrate. For effective use of this product, it must come into contact with the salts. To use this product effectively, it must come into contact with the salts. These salts can be under any type of dirt, grease or contamination. For this reason, these barriers must be removed before the product is applied. As with all surface preparation activities, the best results are achieved through optimal work.
2. Application of CHLOR*RID Apply a sufficient amount of the product evenly onto the surface so that the entire surface is wetted and no areas are left out. This can be done by using a spray pump or a conventional spray gun. The method is not relevant as long as the entire surface to be cleaned is wetted. Once the condenser is completely wetted, the salts begin to dissolve and can now simply be rinsed off. Rinsing - It is strongly recommended to use a water hose.
3. Rinsing It is strongly recommended to use a water hose and not a pressure washer as this could damage the blades. The use of drinking water is recommended for rinsing.

ATTENTION:
Aggressive chemical and acidic detergents, aggressive chemicals, household bleach or acidic detergents must not be used to clean ElectroFin®-coated condensers. These detergents are difficult to rinse, accelerate corrosion and attack the ElectroFin® coating. If the dirt is under the surface of the condenser, use the recommended special cleaners described above.

ATTENTION:
Water at high speed or compressed air water at high speed from a pressure washer or compressed air may only be used at very low pressure to prevent damage to the fins. The force of the water or air jet can bend the edges of the blades and increase the pressure drop of the air. This can lead to a reduction in performance and undesirable shutdowns of the unit.

14.3. Cleaning the fans

⚠	ATTENTION! Risk of injury – Pay attention to the fans! Do not remove the protective grilles under any circumstances!

Check that the protective grilles of the fans are free of objects and/or impurities. The latter can considerably impair the overall performance of the machine, which in some cases can even lead to damage to the fans.

14.4. Checking the oil level in the compressor

⚠	ATTENTION! Do not use the units if the oil level in the compressor is low.

The lubricating oil level in the compressor can be checked via the sight glasses. The oil level must be checked when all compressors are in operation.

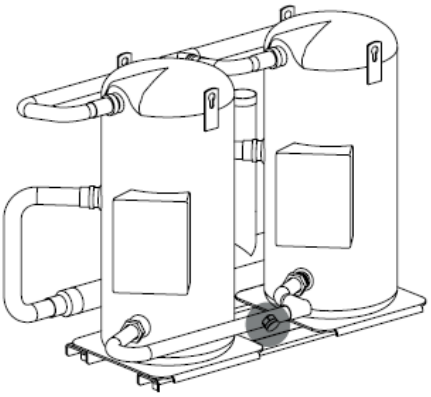

Figure 99: Example Compressor assembly – oil sight glass

In some cases, the oil may migrate towards the cooling circuit and cause slight fluctuations in level, so they should be considered normal. Fluctuations in level are also possible when the power control is activated; the oil level must always be visible through the sight glass. The formation of foam at start-up is considered normal. A prolonged and excessive presence of foam during operation, on the other hand, indicates that the coolant has diluted in the oil.

14.5. Water filter (external if present)

In order to ensure the desired water quality as well as the required water circulation quantity, external water filters are recommended. This must be checked for contamination approx. every 6 months, depending on the extent of contamination. A filter unit can be ordered at any time as an original spare part - please contact our KKT chillers team (*contact details*).

14.6. Complete cleaning of the cold water circuit

Due to the complexity and diversity of the possible external materials, we recommend that the complete cleaning of the cold water circuit only be carried out by qualified personnel – please contact our KKT chillers Service Team (*Contact details*).

15. Service

All maintenance and service work may only be carried out by properly trained, competent personnel.

Our technical customer service can be reached around the clock and will assist you with all service matters (maintenance, repairs, spare parts, ...):

15.1. Repair and replacement of components

- Always observe the wiring diagrams supplied with the machine when replacing an electrically powered component, ensure that each conductor is properly disconnected to avoid reconnection errors.
- When restarting the machine, the steps of the starting phase must always be repeated.
- After maintenance work on the unit, the level and humidity indicator must be monitored. After a maximum of 12 operating hours of the machine, the cooling circuit must be completely dry and the level and humidity indicator must be green. Otherwise the filter cartridges must be replaced.

15.2. Spare parts

To ensure that the performance of your chiller is not impaired, we recommend that you only use original spare parts from KKT chillers. By doing so, you ensure the reliability and quality of the machine. For inquiries regarding spare parts, please contact our KKT chillers Service Team ***spareparts@kkt-chillers.com*** or (***contact details***).

16. Decommissioning/Taking out of service

⚠	**ATTENTION! Decommissioning must only be carried out by professional and qualified technicians.** **They must also be familiar with the local regulations.**

For safety-relevant information regarding any residual energy, please refer to ***Residual energy.***

17. Recycling

⚠	**ATTENTION! Dismantling must be carried out by professional and qualified technicians.** **Water and refrigerant pipes are pressurised!** **They must also be familiar with the local regulations.**

All parts (e.g. refrigerant, oil, glycol, metal, electronics, battery etc.) must be recycled, reused or disposed of. Please note and follow all local and national regulations and if necessary contact your local waste management agency.

A specialised disposal company must be contracted to dispose of these wastes. They issue a proof of disposal which must be archived.

18. Products, solutions and services

Apart from the Compact-Line, KKT chillers also offers other products, solutions and services which are not described in this document. Please have a look at our website ***http://www.kkt-chillers.com*** or contact your KKT chillers contact person - we look forward to hearing from you!

19. Lists

19.1. List of illustrations

Figure 1: Cooling scheme 9
Figure 2: Limits of use 16
Figure 3: Display eBoxX 260 18
Figure 4: Display eBoxX 350 18
Figure 5: Pump type eBoxX260-300 -> Grundfos NB 40-250/245 19
Figure 6: Pump type eBoxX350-530 -> Grundfos NB 50-250/254 20
Figure 7: Height-adjustable spring antivibration mountings 23
Figure 8: Packaging container eBoxX 250 23
Figure 9: Warning labels for residual energy eBoxX 260-300 26
Figure 10: Warning labels for residual energy eBoxX 350-530 27
Figure 11: Transport eBoxX 260 - eBoxX 300 36
Figure 12: Transport eBoxX 350 - eBoxX 530 37
Figure 13: Main switch 53
Figure 14: Control panel 54
Figure 15: Start screen 55
Figure 16: Status of refrigeration circuits 56
Figure 17: Main menu 1 57
Figure 18: Main menu 2 57
Figure 19: Main menu 3 57
Figure 20: Setpoint value menu 58
Figure 21: AF+ in cooling mode/AUTOMATIC 59
Figure 22: Compensation/offset setpoint 59
Figure 23: FDL - Power reduction 60
Figure 24: FDL times 60
Figure 25: FNR - Noise reduction 61
Figure 26: FNR times 61
Figure 27: Analog inputs 62
Figure 28: Digital inputs 62
Figure 29: Digital outputs 62
Figure 30: Alarm history 63
Figure 31: Menu info 1 63
Figure 32: Menu info 2 63
Figure 33: Menu info 3 63
Figure 34: Menu info 4 64
Figure 35: Menu info 5 64
Figure 36: Set language 64
Figure 37: Operating hours circuit 1 65
Figure 38: Operating hours circuit 2 65
Figure 39: Hour counter 65
Figure 40: Config GLT 66
Figure 41: Setting BMS Port 66
Figure 42: Example of alarm message 67
Figure 43: Password entry 70
Figure 44: Service menu 1 70
Figure 45: Counter setting circuit 1 71
Figure 46: Counter setting circuit 2 71
Figure 47: Counter setting limit 71
Figure 48: Sensor setting outdoor temperature 72
Figure 49: Sensor setting 72
Figure 50: Return temperature control 72

Figure 51: Control / Cooling mode 73
Figure 52: Setting flow temperature control 1....73
Figure 53: Setting flow temperature control 2....74
Figure 54: Setting flow temperature control 3....74
Figure 55: Compressor switching times....75
Figure 56: Max. outlet temperature 75
Figure 57: Pump don setting 76
Figure 58: Heating setting 76
Figure 59: Service menu 2 77
Figure 60: Setting setpoint limit 1....77
Figure 61: Setting pump 1....78
Figure 62: Pump delay times....78
Figure 63: Pump setting in "On request" mode 79
Figure 64: Service menu 3 79
Figure 65: Fan speed control....79
Figure 66: Setting of the fans for chiller mode 80
Figure 67: Service menu 4 80
Figure 68: Compressor shutdown high pressure....81
Figure 69: Compressor switch-off low pressure 81
Figure 70: Compressor shutdown anti-freeze mixture 82
Figure 71: Compressor shutdown power consumption 82
Figure 72: Low pressure alarm / threshold 83
Figure 73: Setting / Frequency ND alarm 84
Figure 74: High pressure alarm settings....84
Figure 75: Anti-freeze mixture alarm settings....84
Figure 76: Heating setting 85
Figure 77: Limit value coolant media....85
Figure 78: Low condensing pressure Settings....86
Figure 79: Low condensing pressure settings 86
Figure 80: Outdoor temperature alarm setting 86
Figure 81: Alarm delay 87
Figure 82: LowSH and MOP alarms 87
Figure 83: LOP alarms 87
Figure 84: Service menu 4 88
Figure 85: Setting expansion valve 1....88
Figure 86: Setting expansion valve 2....89
Figure 87: Setting expansion valve 3....90
Figure 88: Setting expansion valve 4....90
Figure 89: Setting expansion valve 5....90
Figure 90: Setting expansion valve 6....91
Figure 91: Setting expansion valve 7 91
Figure 92: Setting parameter reset / factory settings....91
Figure 93: Service menu 5 92
Figure 94: Manual compressor shutdown 1....92
Figure 95: Manual compressor shutdown 2....92
Figure 96: Digital outputs setting....93
Figure 97: Setting analog outputs....93
Figure 98: Manual mode expansion valve....93
Figure 99: Example Compressor assembly – oil sight glass.... 103

19.2. List of tables

Table 1: Contact details 2
Table 2: Safety instructions 8
Table 3: Explanation of terms 9
Table 4: PED category 11
Table 5: Materials used 12
Table 6: Water quality 13
Table 7: Technical data 15
Table 8: Optional hydraulic module 16
Table 9: Number of fans 17
Table 10: Potential emissions 21
Table 11: Resistance e-coating 22
Table 12: Reference standards 24
Table 13: Setting value of the safety components 27
Table 14: Personal protective equipment for servicing work 29
Table 15: Sound power and sound pressure level 34
Table 16: Material of packaging 38
Table 17: Weight distribution eBoxX 260 – 300 without option Hydraulic module 39
Table 18: Weight eBoxX 260 – 300 with hydraulic module 39
Table 19: Weight distribution eBoxX 350 – 530 without option Hydraulic module 40
Table 20: Weight eBoxX 350 – 530 with hydraulic module 40
Table 21: Minimum distances eBoxX 260 to eBoxX 530 42
Table 22: Control panel buttons 54
Table 23: Error codes 68
Table 24: Maintenance intervals 98