Библиотека СОК

INFICON

Operating Manual

D-TEK Stratus®

Refrigerant Leak Detector and Portable Monitor

074-708-P1A

INFICON

Two Technology Place

East Syracuse, NY 13057-9714

Table of Contents

1 Declaration of Conformity 4
2 Cautions and Warnings 5
3 Specifications 6
4 D-TEK Stratus 9
5 Included in the Package 11
6 What is Cloud Hunting? 12
7 Charging the Battery 13
8 Turning On the Instrument and Preparing for Use 14
9 Screen Layout and Symbols 15
10 Using Cloud Hunting (Portable Monitor) Mode 17
11 Using Pinpoint Mode 19
12 Manual Zero Mode 20
13 Earbuds and Volume Control 21
14 Removing and Installing the Lithium Ion Battery 22
15 Removing and Installing the Sensor 23
16 Replacing Filters 24
17 Extra-long Probe 25
18 Needle Probe Extension 26
19 Carbon Dioxide Sensor 27
20 Cleaning and Storage 28
21 Replacement Parts and Accessories 29
22 Troubleshooting Guide 30
23 Warranty and Liability-Limitation 32
24 Returning the Instrument for Warranty or Repair 33

1 Declaration of Conformity

EU DECLARATION OF CONFORMITY

This declaration is issued under the sole responsibility of the manufacturer INFICON. The object of the declaration is to certify that this equipment, designed and manufactured by:

INFICON Inc.
Two Technology Place
East Syracuse, NY 13057
USA

is in conformity with the relevant Community harmonization legislation. It has been constructed in accordance with good engineering practice in safety matters in force in the Community and does not endanger the safety of persons, domestic animals or property when properly installed and maintained and used in applications for which it was made.

Equipment Description:	D-TEK Stratus Refrigerant Leak Detector and Portable Monitor	
Model Number:	724-202-Gxx	(Applicable to all Group numbers)
Applicable Directives:	2014/35/EU	LVD
	2014/30/EU	General EMC
	2011/65/EU	as amended by 2015/863/EU RoHS
	2006/66/EC	as amended by 2013/56/EU Battery Directive
Applicable Standards:		
Safety:	EN 61010-1:2010	Safety requirements for electrical equipment for measurement, control, and laboratory use. General requirements
	EN 62133:2013	Safety requirements for portable sealed secondary cells and for batteries made from them, for use in portable applications. CB Test Cert DK-73443-UL
	UL 2054	UL Standard for Safety Household and Commercial Batteries Cert 20180518-MH29443
	UL 60950-1 & CAN/CSA-C22.2 No. 60950-1-07	UL Standard for Safety Information Technology Equipment – Safety – Part 1: General Requirements Cert 20180518-MH294
	UN 38.3	UN Manual of Tests and Criteria, Part III, Sub-section 38.3. Safe Transport of Li-Ion Rechargeable Battery
Emissions:	EN 61326-1:2013	Edition 2.0 (Radiated, Conducted & Harmonic Emissions) (EMC- Measurement, Control & Laboratory Equipment)
	CISPR 11/EN 55011:2009	(+A1:2010) Emission standard for industrial, scientific, and medical (ISM) radio RF equipment, Class A
Immunity:	EN 61326-1:2013	Edition 2.0 (EMC – Measurement, Control & Laboratory Equipment) Immunity per Table A.1 – Portable Test and Measurement Equipment
RoHS	Compliant	

CE Implementation Date: May 7, 2019

Authorized Representative:
Brian King
INFICON
General Manager – Service Tools
Two Technology Place
East Syracuse, NY USA 13057

EU Authorized Representative
INFICON GmbH
50968 Köln, Bonner Str. 498

ANY QUESTIONS RELATIVE TO THIS DECLARATION OR TO THE SAFETY OF INFICON'S PRODUCTS SHOULD BE DIRECTED, IN WRITING, TO THE AUTHORIZED REPRESENTATIVE AT THE ABOVE ADDRESS.

2 Cautions and Warnings

Cautions:

- Only use a certified charger/cord with an output of 5 V (dc) ±5%, 1 A ±5%.
- Keep the device out of extremely high or low temperature locations.
- Do not expose the battery to liquid.
- Do not use the device if you notice any damage to the battery.
- Do not disassemble or modify the battery.
- Handle and dispose of the battery per local regulations.
- If the recharging operation fails to complete, even when the specified recharging time has elapsed, immediately stop further recharging.
- Do not leave the battery unattended while charging.
- Unplug the charger when the battery is fully charged.
- Improper use or disposal of lithium ion batteries can cause a fire.
- This instrument is not intended for use in flammable environments.

⚠ WARNING

This symbol is used to alert the user to the presence of important operating and maintenance (servicing) instructions in the literature accompanying this instrument.

⚠ WARNING

Exposure to high concentrations of CO_2 or refrigerants is dangerous and can be life-threatening.

The instrument is not for use in toxic or hazardous environments. It is not a personal protection or life-saving device. Always exercise extreme caution in potentially toxic or hazardous environments.

3 Specifications

Usage	indoor/outdoor
Sensor type	infrared
Compatible refrigerants	all CFCs, HCFCs, HFCs, HFOs, blends (including A2Ls), and CO2[1]
Minimum sensitivity (**Pinpoint** mode, **Super** sensitivity)	0.03 oz/yr (1 g/yr)[2]
Display resolution (**Cloud Hunting** mode)	1 ppm
Display range (**Cloud Hunting** mode)	0 to 9999 ppm
Accuracy (**Cloud Hunting** mode, with clean air reference)	±1 ppm ±10% of reading
Battery type	lithium ion
Charging input type	micro USB
Charging time (starting at 0%)	approximately 3 hours
Battery life	approximately 8 hours (Cloud Hunting) approximately 10 hours (Pinpoint)
Input voltage	5 V (dc) ±5%
Input current	1 A ±5%
Warm-up period	45–90 seconds
Temperature ranges and humidity	
• Storage	-20–60°C (-4–140°F)
• Operating[3]	-20–50°C (-4–122°F)
• Charging	0–45°C (32–113°F)
• Humidity	95% RH NC maximum
Altitude	2000 m (6500 ft.)
Pollution degree	2
Overvoltage category	2
Weight (with battery; not including carrying case or accessories)	1.10 lb. (0.50 kg)

[1] The detection of CO_2 requires an optional CO_2 sensor.

[2] To achieve optimal performance and the specified sensitivities, it is recommended to allow D-TEK Stratus to run for 15 minutes prior to use.

[3] Use in temperatures below 0°C (32°F) should be limited. Extended warm-up time is recommended before use in low temperature environments.

Specification table in accordance with EN 14624

	R134a	R1234yf
Minimum sensitivity, fixed (static)	1 g/yr.	0.5 g/yr.
Maximum sensitivity, fixed (static)[4]	>50 g/yr.	>50 g/yr.
Minimum sensitivity, moving (dynamic)	1 g/yr.	1 g/yr.
Maximum sensitivity, moving (dynamic)[4]	>50 g/yr.	>50 g/yr.
Minimum response/detection time	< 1 s	< 1 s
Zeroing time	1–4 s	1–4 s
Recovery time for 50 g/yr exposure[5]	7.6 s	6.4 s
Minimum sensitivity in contaminated environment	>2 g/yr.	1 g/yr.
Calibration frequency	Check annually with calibrated leak standard	

[4] The upper leak detection limit is not specified by INFICON as there is no upper limit to the size of the leak the detector is able to detect.

[5]As no 50 g/yr. leak standard was available during testing, a 32 g/yr leak standard was substituted.

SAE Applications

SAE standards J2791 (R-134a) and J2913 (R-1234yf) specify sensitivity to the following leak sizes for the corresponding settings below. **Super** sensitivity is more sensitive than what is required by SAE for leak checking in a clean environment (free of background refrigerant). If leak checking in a contaminated environment (high background refrigerant), switch to **Super** sensitivity

R-134a leak rate (g/yr)	R-1234yf leak rate (g/yr)	Sensitivity Setting
14	14	low
7	7	medium
4	4	high

Perform the leak test with the engine turned off.

The following table lists some common under-hood chemicals and indicates whether or not they will cause a false-trigger from D-TEK Stratus.

Chemical	False-Trigger
windshield washer solvent (methanol base)	yes
Ford™ spot and stain remover	yes
Ford rust penetrant and inhibitor	yes
Ford gasket and trim adhesive	yes
Permatex™ natural blue cleaner and degreaser	yes
Ford brake parts cleaner	yes
Ford spray carburetor tune-up cleaner	yes

Chemical	False-Trigger
Ford clear silicon rubber	yes
Motorcraft™ G-05 antifreeze/coolant	no
Gunk™ liquid wrench	no
Ford pumice/lotion hand cleaner	no
Ford Motorcraft DOT3 brake fluid	no
Ford silcon lubricant	no
Dexron™ automatic transmission fluid	no
mineral engine oil	no

Patents (Pending)

- Application #10 2018 206 877.1
- Application #18171080.7
- Application # 10 2018 208 826.8

4 D-TEK Stratus

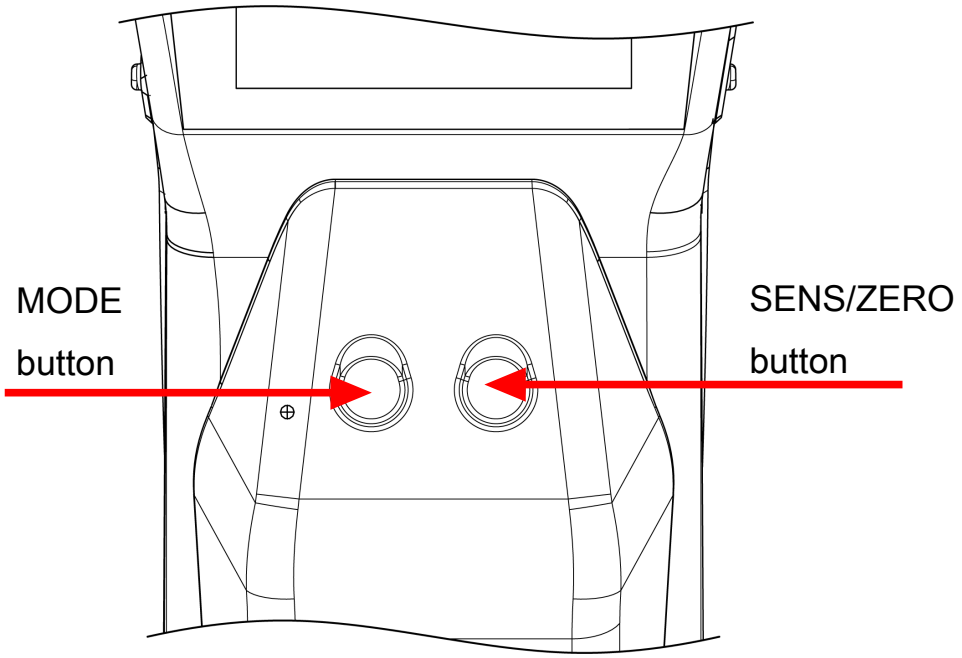

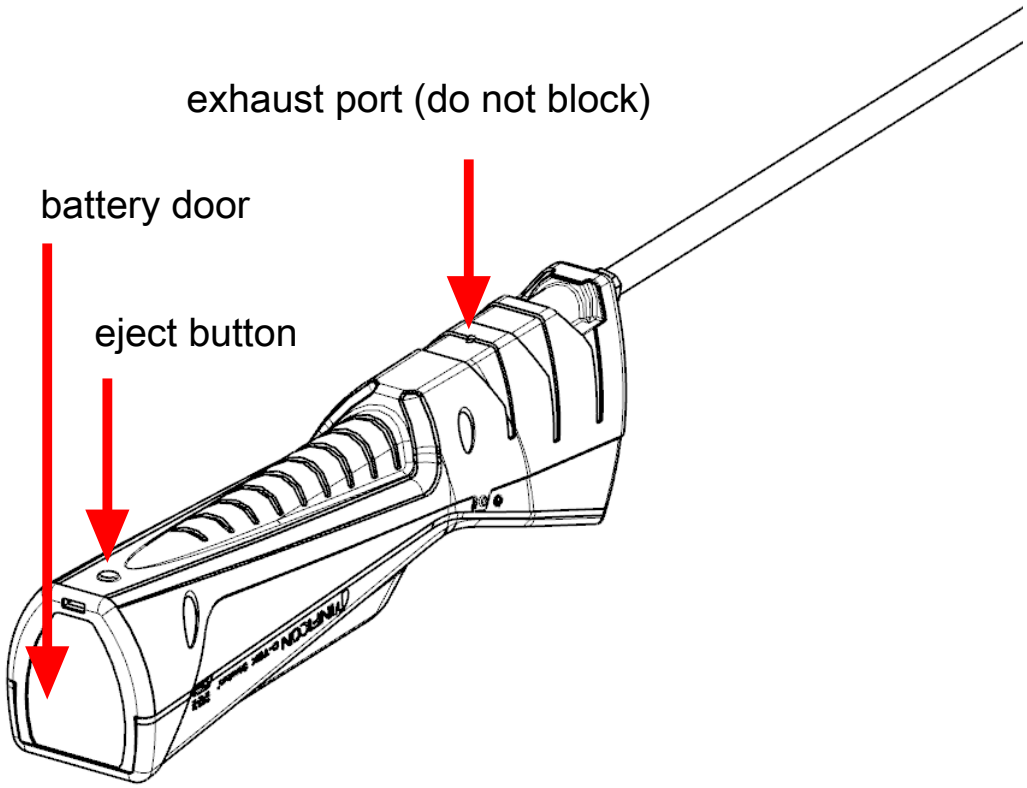

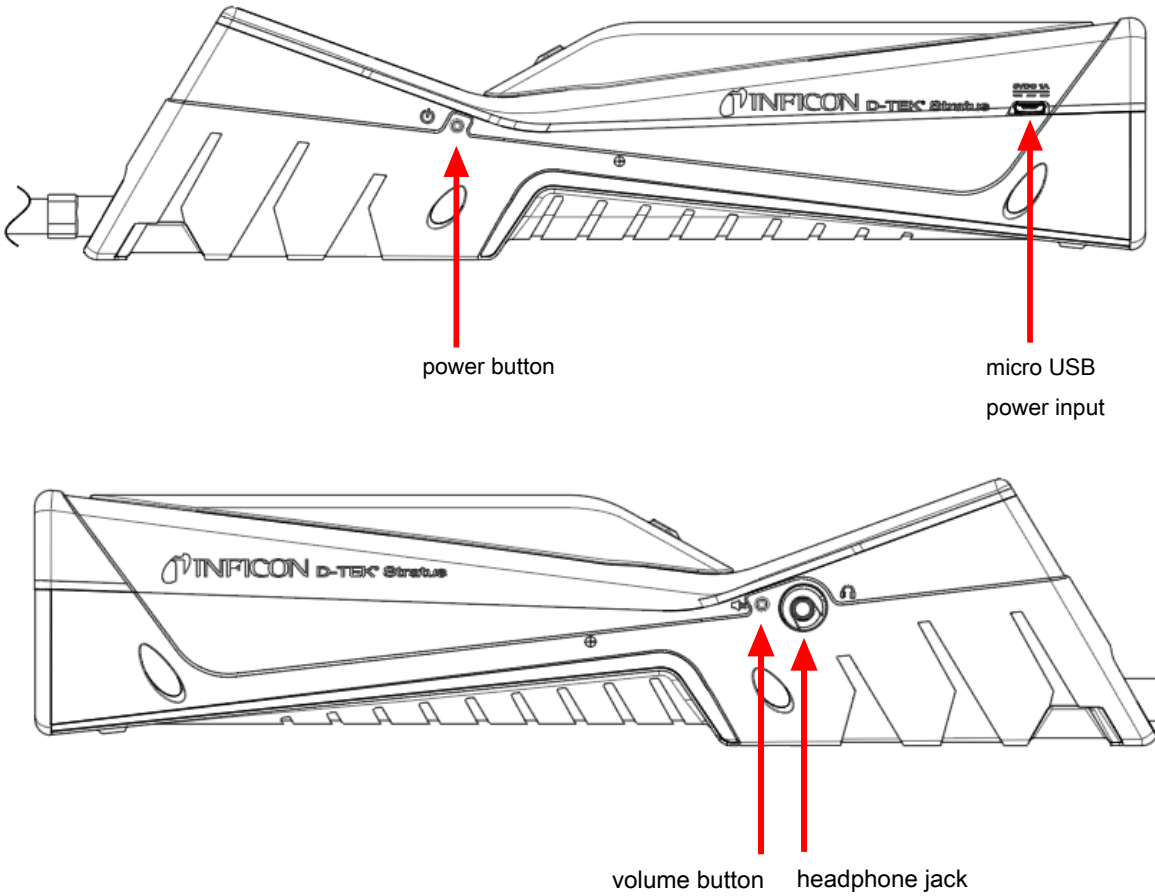
INFICON D-TEK Stratus
power button
micro USB
power input
INFICON D-TEK Stratus
volume button
headphone jack

5 Included in the Package

- D-TEK Stratus
- plastic carrying case
- lithium ion rechargable battery (installed)
- D-TEK infrared sensor (installed)
- extra-long probe
- wall charger (including plugs for multiple regions)
- car charger
- replacement filters
- earbuds
- micro USB charging cable

6 What is Cloud Hunting?

When refrigerant leaks from a system, it does not disperse evenly in the air. The concentration of refrigerant is usually higher near the source of the leak. The density of refrigerants is also different than that of air, so it tends to form “clouds” in the air, typically closer to the floor. These clouds are colorless and odorless for most refrigerants. When leak checking with a traditional leak detector, it will likely alarm when walking into a refrigerant cloud. This does not help you find the leak, because the cloud may not be near the leak source.

D-TEK Stratus uses patent-pending technology to display the refrigerant concentration in the air in parts per million (ppm). This allows you to read the display and follow the number to find areas of higher concentration, leading you straight to the leak source.

7 Charging the Battery

D-TEK Stratus uses a rechargeable lithium ion battery that comes partially charged. INFICON recommends charging the battery before use. Using the supplied charger or charging cradle accessory, a dead battery can be charged to 80% in approximately 2 hours and 100% in approximately 3 hours. A full charge typically lasts about 8 to 10 hours of operation, depending on the mode used and the operating temperature. An on-screen indicator displays the remaining battery percentage.

D-TEK Stratus can be used while charging.

8 Turning On the Instrument and Preparing for Use

If the screen does not turn on, the battery is low and needs to be charged. D-TEK Stratus can be used while charging.

1. Long press the power button (located on the left side of the body of the instrument) to turn D-TEK Stratus **On** or **Off**.
   ⇨ D-TEK Stratus begins a variable-time warm-up for 45 to 90 seconds. When warm-up is complete, D-TEK Stratus is ready to use.
2. To switch modes, press the **MODE** button. This toggles between **Cloud Hunting**, **Pinpoint** and **Manual Zero** modes.

D-TEK Stratus always starts in the last mode that was used.

⚠ WARNING

Do not block the exhaust port.

Blocking exhaust air can cause false alarms or readings.

9 Screen Layout and Symbols

D-TEK Stratus uses the display screen for all indicators and information. The display consists of a top bar, main display, and a bottom bar.

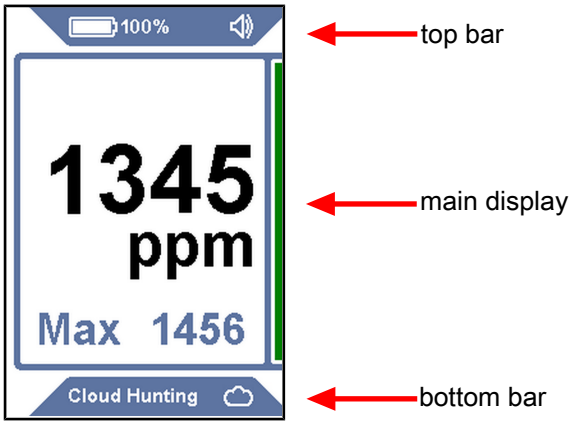

Top bar: The top bar includes the battery symbol, the percentage, the sensor indicator (when a non-standard sensor type is used), and the sound indicator.

Symbol	Description
	battery charge is 75–100%
	battery charge is 50–74%
	battery charge is 30–49%
	battery charge is 10–29%
	battery charge is <10%
	battery is charging
	volume is set to 100% (default)
	volume is set to 50%
	volume is muted
CO2	CO_2 sensor is installed

Main display: The main display shows the information needed for leak checking. The main display includes the ppm reading for **Cloud Hunting** mode and leak indicators for **Pinpoint** and **Manual Zero** modes.

Bottom bar: The bottom bar displays the current mode and the mode indicator symbol. It also includes the sensitivity for **Pinpoint** mode.

Symbol	Description
	indicates **Cloud Hunting** mode
	indicates **Pinpoint** mode
	indicates **Manual Zero** mode
	sensitivity = **Super** (only displayed in **Pinpoint** mode)
	sensitivity = **High** (only displayed in **Pinpoint** mode)
	sensitivity = **Medium** (only displayed in **Pinpoint** mode)
	sensitivity = **Low** (only displayed in **Pinpoint** mode)

10 Using Cloud Hunting (Portable Monitor) Mode

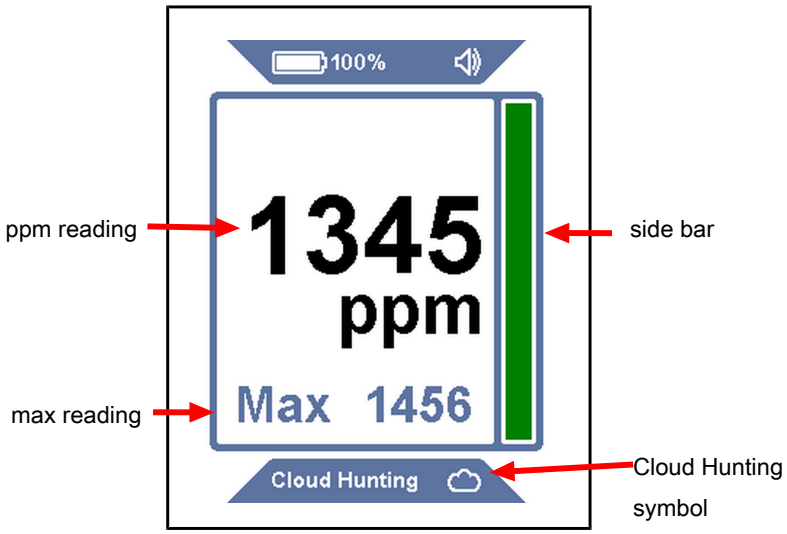

Cloud Hunting mode is identified by a large ppm reading on the display and the words **Cloud Hunting** on the bottom, along with a cloud symbol. The side bar increases and decreases with changes in the ppm reading.

There is no sensitivity setting in Cloud Hunting mode.

1. Slowly move through the suspect areas and observe the ppm reading.
2. Follow the ppm reading to find areas of higher refrigerant concentration. The higher the number, the higher the concentration.
3. Press the **SENS/ZERO** button to enable and disable the **MAX** feature. When enabled, the highest ppm level observed is shown below the main ppm display. To reset the **MAX** reading, long-press the **SENS/ZERO** button or toggle the feature off and back on again.

D-TEK Stratus uses a patent-pending switching valve in **Cloud Hunting** mode to constantly compare the sample from the tip of the probe with the air inside the body of the leak detector (the reference sample). This technology is what allows D-TEK Stratus to work without the use of a carbon filter. Lingering for several minutes in an area with a high concentration of refrigerant may cause the reference sample to

become contaminated with refrigerant, which causes the ppm reading to settle back toward zero. If this occurs, move back to an area with clean air (while in **Cloud Hunting** mode) for a few minutes to allow the reference sample to become clean again.

11 Using Pinpoint Mode

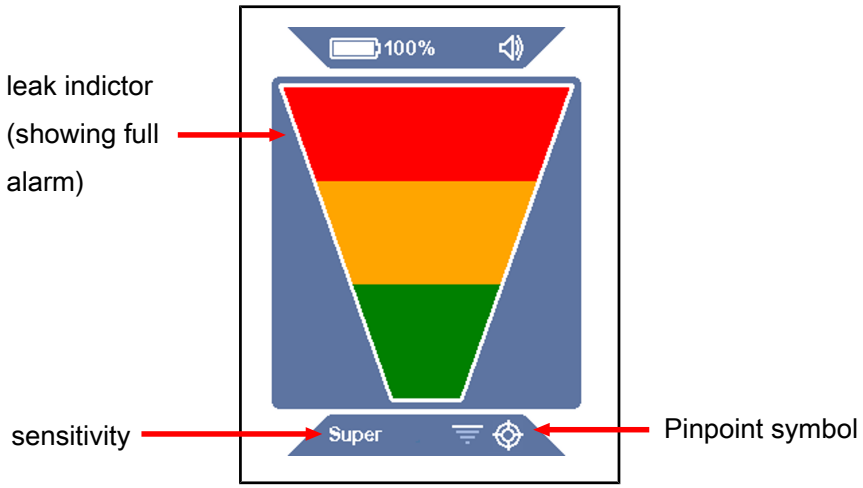

Pinpoint mode is identified by a large leak indicator on the display and a **Pinpoint** symbol on the bottom bar. The current sensitivity is also indicated on the bottom bar. This mode works like a standard leak detector with auto-zeroing, where the indicator bars illuminate to indicate when a leak is detected.

1. Place the tip of D-TEK Stratus as close as possible to the suspected leak (do not block the air flow).
2. Slowly move the probe past each possible leak point.
   ⇨ If a leak is detected, D-TEK Stratus alarms and the on-screen indicator illuminates.
3. When a leak is identified, pull the probe away from the leak for a few seconds and then recheck the spot to verify the leak.

In **Pinpoint** mode, D-TEK Stratus automatically zeros to the background refrigerant and only alarms again with a higher concentration of refrigerant. When this occurs, either continue looking for a higher concentration of refrigerant or move the probe to an area of lower concentration for a few seconds to reset the zero point.

Press the **SENS/ZERO** button to switch the sensitivity setting. When working with a large leak, it can be easier to pinpoint the leak location using a lower sensitivity setting. The current sensitivity is displayed on the bottom bar.

---

12 Manual Zero Mode

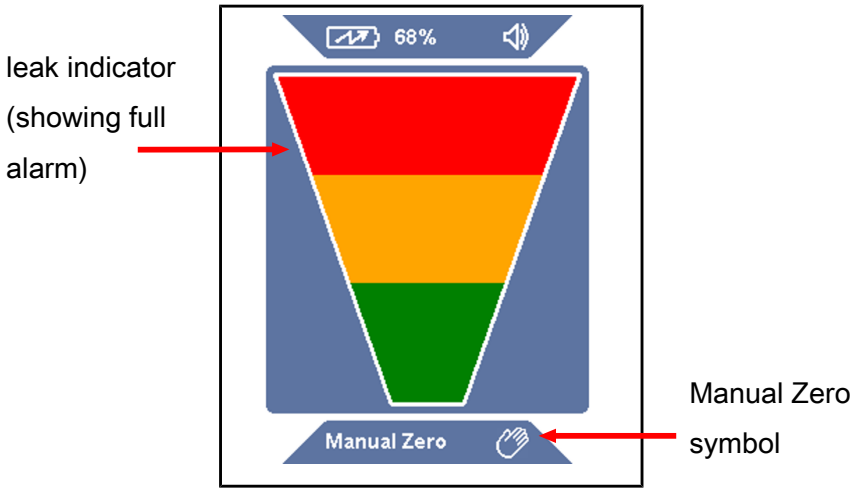

Manual Zero mode looks and operates similar to **Pinpoint** mode, but is identified by the text **Manual Zero** and the **Manual Zero** symbol on the bottom bar. **Manual Zero** mode allows the user to manually zero to the background refrigerant by pressing the **SENS/ZERO** button. Once the new zero point is set, D-TEK Stratus will not alarm unless a higher concentration of refrigerant is detected.

Manual Zero mode beeps faster at the zero point than other modes. If the concentration is lower than the current zero point, the beeping slows. This allows the user to know if they are moving away from the leak by listening to a change in the beep rate.

There is no sensitivity setting in **Manual Zero** mode.

Manual Zero mode requires an extra warm-up time of up to 15 minutes for optimal performance.

13 Earbuds and Volume Control

A headphone jack is located on the right side of D-TEK Stratus. Plug in the supplied earbuds to hear the alarm sounds through the earbuds.

⚠ WARNING

If attempting to use headphones not supplied by INFICON, be sure to test them carefully to avoid hearing damage.

A volume button is located next to the headphone jack. Press the volume button to toggle from 100% volume, to 50% volume, and to mute. The volume defaults to 100% at startup. When the earbuds are plugged in, the volume toggles between 100% volume and mute.

14 Removing and Installing the Lithium Ion Battery

1. Press the eject button on the back of D-TEK Stratus and remove the battery door.

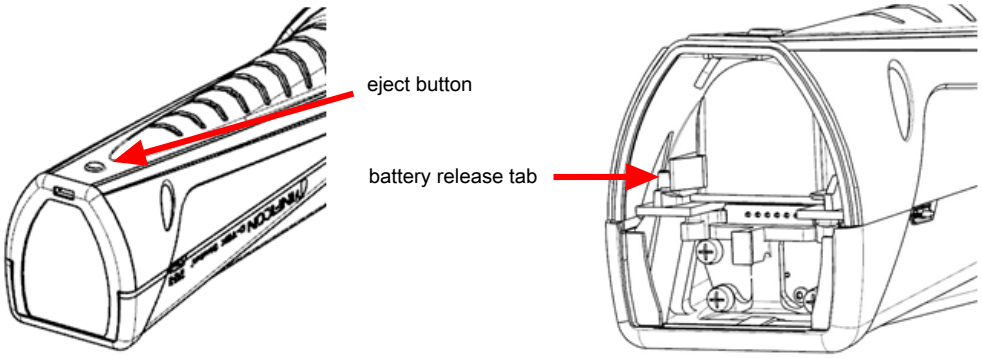

2. Remove the battery by moving the battery release tab to the side until the battery begins to eject. Slide the battery out.
3. Align the battery with the rails.

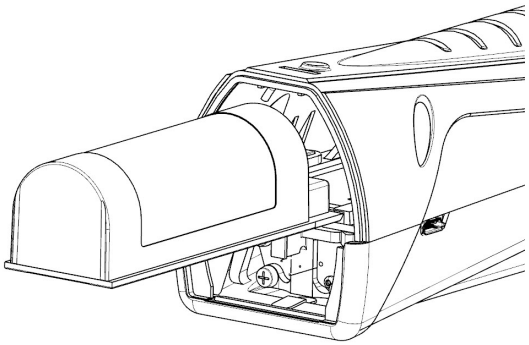

4. Gently push the battery along the rails until the battery release tab engages.
   ⇨ Do not force the battery. If the battery does not slide freely, check the alignment and try again.
5. Reinstall the battery door.

15 Removing and Installing the Sensor

D-TEK Stratus uses a cartridge style sensor that is quick and easy to remove and replace in the field. In addition to the standard sensor, INFICON offers a CO_2 specific sensor for use in refrigeration and air conditioning applications. See Replacement Parts and Accessories [▸ 29].

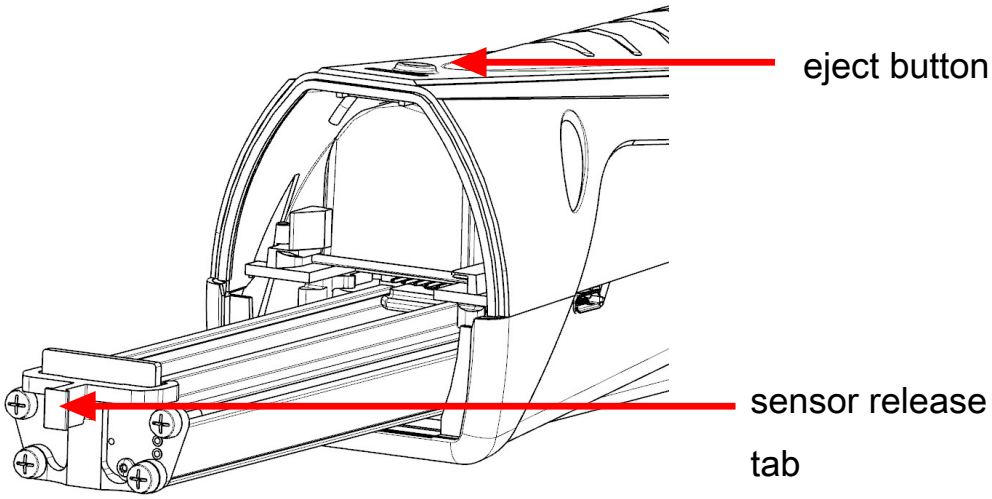

To replace the sensor:

1. Press the eject button on the back of D-TEK Stratus and remove the battery door.
2. Grasp the sensor release tab and gently pull it out.
3. Align the new sensor with the rails.
4. Gently push the sensor along the rails until it is fully inserted.
   ⇨ Do not force the sensor. If it does not slide freely, check the alignment and try again
5. Reinstall the battery door.

16 Replacing Filters

D-TEK Stratus uses a hydrophobic filter cartridge that allows air and refrigerants to pass through while filtering out water, dirt, and oil. Examine the white cloth to determine if the filter needs to be changed. If the cloth appears discolored, install a new filter. Changing the filter is also an easy troubleshooting step if you suspect your leak detector is not properly detecting refrigerants. A clogged air filter can limit the sample air flow.

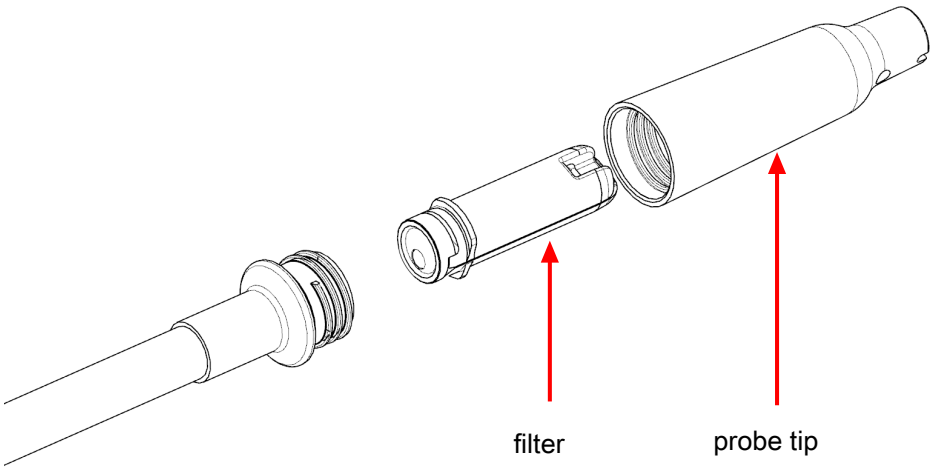

Exposing the filter to water or oil can block air flow. If this occurs, remove the filter with the probe facing down to avoid getting contaminants in the probe and install a new filter. If the filter is wet, it can be reused once it dries.

⚠ CAUTION

Never use the instrument without a probe tip and filter.

To replace the filter:

1. Unscrew the probe tip and remove the filter.
2. Insert the new filter into the probe.
3. Screw the probe tip on. Do not overtighten.

17 Extra-long Probe

D-TEK Stratus includes an extra-long replacement probe for leak checking in hard-to-reach areas.

To install the extra-long probe:

1. Unscrew the standard probe from the D-TEK Stratus body using a 10 mm wrench.
2. Screw on the extra-long probe to approximately 35 in·lb (4 N·m). Do not overtighten.
3. Unscrew the probe tip from the standard probe and remove the filter (or use a new one).
4. Insert the filter into the extra-long probe.
5. Screw the probe tip onto the extra-long probe. Do not overtighten.

18 Needle Probe Extension

The optional needle probe extension accessory allows for leak checking in tight spots and insulation. This probe is pointed to easily puncture insulation and fit into small areas, while remaining semi-flexible and resilient to maneuver through tough areas.

To install the needle probe extension:

1. Unscrew the probe tip. Leave the filter in place.
2. Insert the new filter into the probe tip.
3. Screw the probe tip on. Do not overtighten.

19 Carbon Dioxide Sensor

An optional CO_2 sensor can be used to search for leaks in refrigeration and air conditioning applications. To use the CO_2 sensor, remove the standard sensor and install the CO_2 sensor following the instructions in Removing and Installing the Sensor [▸ 23]. D-TEK Stratus automatically recognizes the CO_2 sensor and **CO_2** is displayed on the top bar of the screen the entire time the CO_2 sensor is installed.

While searching for CO_2 leaks, it is recommended to wear a respirator or mask to avoid exhaling CO_2 toward the probe.

⚠ WARNING

Exposure to high concentrations of CO_2 or refrigerants is dangerous and can be life-threatening.

The instrument is not for use in toxic or hazardous environments. It is not a personal protection or life-saving device. Always exercise extreme caution in potentially toxic or hazardous environments.

20 Cleaning and Storage

D-TEK Stratus can be cleaned with mild detergent or isopropyl alcohol. Care should be taken to prevent cleaner from entering the instrument. Do not clean with gasoline, acetone, or other aggressive solvents as they may damage the plastic or display.

21 Replacement Parts and Accessories

replacement carrying case	724-700-G1
earbuds	721-607-G1
12 V (dc) car charger	721-605-G1
AC wall charger (includes plugs for multiple regions)	721-606-G1
lithium ion battery	721-702-G1
battery charging cradle	721-610-G1
battery/charging cradle combination	721-604-G1
standard sensor (detects CFCs, HCFCs, HFCs, HFOs, and blends (including A2Ls))	724-701-G1
CO_2 sensor	724-701-G2
filter cartridges (quantity, 5)	712-707-G1
replacement probe cap	712-705-G1
needle probe extension	721-612-G1
extra-long probe	721-611-G1
TEK-Check R134a test leak	703-080-G10

22 Troubleshooting Guide

Problem	Cause	Remedy
The following symbol is displayed: 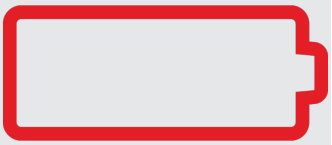	A battery error has occurred. This can be caused by a failed battery or by the battery being improperly installed, or having a poor connection.	Remove and reinstall the battery. If the problem is not fixed, replace the battery. See Removing and Installing the Lithium Ion Battery [▸ 22].
The following symbol is displayed: 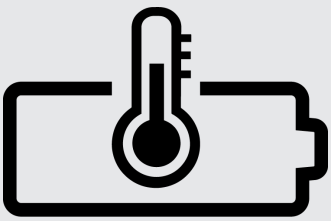	The battery is above or below the ideal temperature range and may not charge properly.	Allow the battery to return to normal temperature.
The following symbol is displayed: 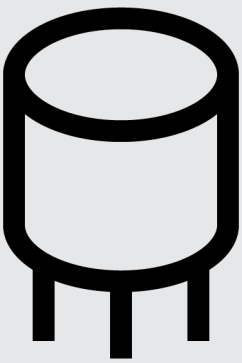	A sensor error has occurred. This can be caused by a failed sensor, or by the sensor being improperly installed, or having a poor connection.	Remove and reinstall the sensor. If the problem is not fixed, replace the sensor. See Removing and Installing the Sensor [▸ 23].
The display does not turn on after long-pressing the power button.	The battery level is critically low.	Charge the battery or plug the unit into a charger.
The unit turns on but does not detect refrigerant.	The unit has not completed warm-up (a coffee cup is displayed).	Wait for the warm-up to complete. This takes 45 to 90 seconds.
	The filter is clogged, restricting the air flow.	Replace the filter cartridge. See Replacing Filters [▸ 24].
	The pump has failed.	Listen for the pump sound. If the pump is not making a sound and the battery has a proper charge, contact INFICON.

Problem	Cause	Remedy
	The sensitivity is set too low (**Pinpoint** mode only).	Verify the sensitivity level. For very small leaks, **High** or **Super** should be used.
	The incorrect sensor is installed.	Verify that the correct sensor is being used (refrigerant sensor or CO_2 sensor).
	The reference sample is contaminated (**Cloud Hunting** mode).	Let D-TEK Stratus run in clean air in **Cloud Hunting** mode for up to five minutes.
The unit alarms in clean air.	The exhaust port is covered.	Verify that the exhaust port is not covered.
	The incorrect sensor is installed.	Verify that the refrigerant sensor is installed instead of the CO_2 sensor.
The ppm falls to zero in an area known to be contaminated.	The reference sample may be contaminated.	Let D-TEK Stratus run in clean air in **Cloud Hunting** mode for up to five minutes.
The pump is not making a sound.	The pump has failed.	If the battery has a proper charge, contact INFICON.

23 Warranty and Liability-Limitation

INFICON warrants your D-TEK Stratus Refrigerant Leak Detector and Portable Monitor to be free from defects of materials or workmanship for one or two years (depending on region) from the date of purchase. INFICON does not warrant items that deteriorate under normal use, including batteries, sensors, and filters. In addition, INFICON does not warrant any instrument that has been subjected to misuse, negligence, or accident, or has been repaired or altered by anyone other than INFICON. INFICON liability is limited to instruments returned to INFICON, transportation prepaid, not later than thirty (30) days after the warranty period expires, and which INFICON judges to have malfunctioned because of defective materials or workmanship. INFICON liability is limited to, at its option, repairing or replacing the defective instrument or part. This warranty is in lieu of all other warranties, express or implied, whether of MERCHANTABILITY or of FITNESS FOR A PARTICULAR PURPOSE or otherwise. All such other warranties are expressly disclaimed. INFICON shall have no liability in excess of the price paid to INFICON for the instrument plus return transportation charges prepaid. INFICON shall have no liability for any incidental or consequential damages. All such liabilities are EXCLUDED.

24 Returning the Instrument for Warranty or Repair

Contact your wholesaler for warranty evaluation or out-of-warranty repair. Do not return the unit to INFICON directly. All instruments and parts returned to INFICON for repair or credit must be properly packaged, insured, shipped transportation charges prepaid, and must have a Return Material Authorization (RMA) number issued before the material is returned. The RMA number is to be marked on all shipping labels and packing slips. Please see your INFICON distributor for assistance. If you have any questions contact INFICON at 800-344-3304, or contact your local INFICON sales office.

INFICON Laboratory Accurate. Toolbox Tough.®

Two Technology Place
East Syracuse, NY 13057-9714 USA

Phone: +1.800.344.3304
Fax: +315.434.2520
E-Mail: service.tools@inficon.com
www.inficonservicetools.com

Bonner Strasse 498
D-50968 Cologne, Germany

Phone: +49 221 56788-660
Fax: +49 221 56788-9660
E-Mail: servicetools.europe@inficon.com
www.inficonservicetools-europe.com

Due to our continuing program of product improvements, specifications are subject to change without notice.
All trademarks are the property of their respective owners.
074-708-P1A ©2019 INFICON