Библиотека СОК

IMPPUMPS®
Pod hrasti 28, 1218 Komenda, Slovenia

SERVICE MANUAL

VERTICAL CENTRIFUGAL PUMP

Model:BL(T)

Warning
- Ground motor before connecting to power supply.
- Do not touch the pump while it is running.
- Do not run the pump without water.

Contents

1.Overview of the product 1

2.Working Condition 1

3.Use Occasions 1

4.Specifications 1

5.Exploded View 2

6.Technical Data 7

7.Chamber and Impeller Assembly Sequence Schematic 17

8.Installation Notes 26

9.Program Activation 26

10.Maintence and Maintenance 26

11.Common Fault (exclude) Table 27

12.Appendix 28

●**Max Working Pressure:Figure5**

Type	Number
BL(T)2,4	2
BL(T)8,12,16,20	3
BL(T)32-2-2~BL(T)32-7	1
BL(T)32-8-2~BL(T)32-12	4
BL(T)32-13~BL(T)32-15-2	5
BL(T)45-2-2~BL(T)45-6	1
BL(T)45-7-2~BL(T)45-9	4
BL(T)45-10-2~BL(T)45-13-2	5
BL(T)64-2-2~BL(T)64-5-2	1
BL(T)64-5-1~BL(T)64-8	4
BL(T)90-2-2~BL(T)90-4-2	1
BL(T)90-4~BL(T)90-6	4

Figure 6.Said extreme pressure and temperature,pressure and temperature must be within the range shown

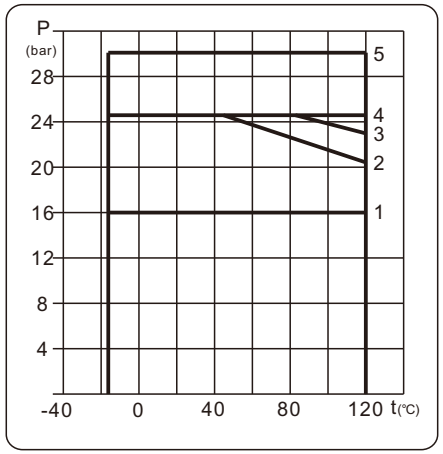

Note： **1、The graphics in this manual are schematic,you are buying pumps and accessories shown in this manual may not,please understand.**

2、The performance of the continuous improvement of products,all products(including appearance and color,etc.)in order to prevail in kind,subject to change without notice.

12.Appendix

Calculation of the Minimum Inlet Pressure

$H=P_b \times 10.2-NPSH-H_f-H_V-H_S$

P_b: Atmospheric Pressure (bar)
H_f: Frictional Resistance in the Inlet Pipe
H_V: Water Vaporization Pressure (Figure 3)
H_S: The safety allowance is usually rated as 0.5m
NPSH: Net Inlet Pressure (Q-NPSH)

If the value of H is positive value, the suction lift is H. If it is negative, the amount of liquid being poured into the pump is H.(Figure4)

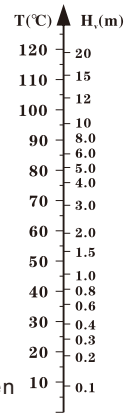

Figure3

Note: The calculation may be more than under normal circumstances,only when using the pump in the following cases **H** calculation:

1.A high media temperature,
2.Liquid flow rate exceeds the rating ,
3.Improted high suction piping,
4.System pressure is too small,
5.Poor inlet conditions.

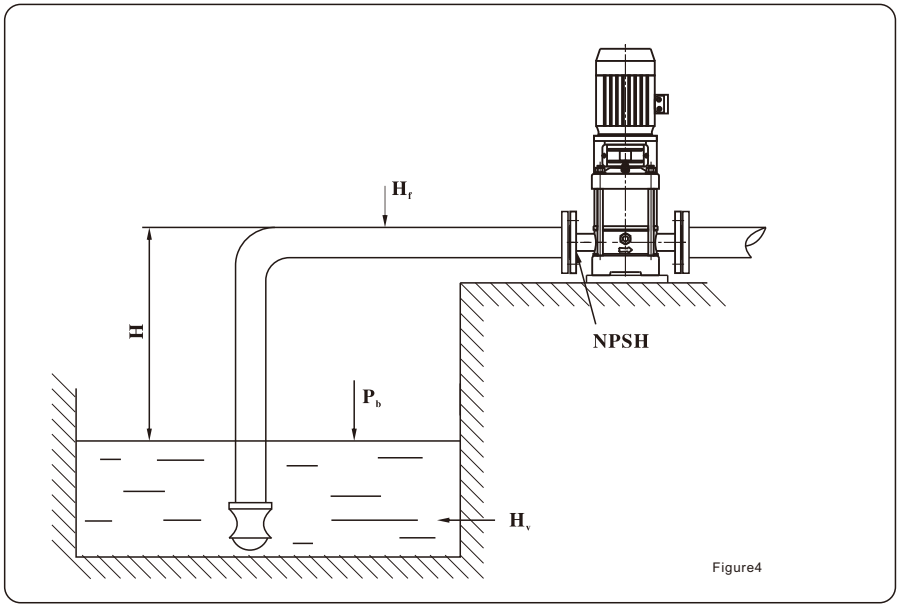

Figure4

Thanks for choosing our product, READ our service instructions carefully before installation and using. Make sure this manual in your safekeeping.

⚠ WARNINGS:

- **Ground motor before connecting to power supply.**
- **Do not touch the pump while it is running.**
- **Do not run the pump without water.**

The one who installs and operates the pump should know the tips as an electrician and keep safety in mind while operating,Cut off the electricity first before removing or dismantling the pump, in case of accidents,The pump should not be used in the environment with combustibles and not used for pumping inflammable gases,The water in the pump chamber shouldbe cleared out when you finish, avoid being frozen.

1.Overview of the product

BL (T) series light stainless steel multi-stage centrifugal pump (afterwards called pump), set for short carry out the Q/SG115 Enterprise Standards of light stainless steel multi-stage centrifugal pump. This product boasts characters of high efficiency, low noise, steady operation, etc. The pump set adopts the non-self-priming vertical multi-stage structure, which makes a compact whole, its installation easy, its operation and maintenance convenient.

2.Working Condition

2.1.Medium temperature: normal type:0°C~68°C, hot water type:0°C~120°C,
2.2.Ambient temperature:+40°C,
2.3.Max ambient pressure:1.0MPa,
2.4.Advisable to use motor of higher power in case that the density or viscosity of medium is above that of water.
2.5 numbers of stop/start for motor
4KW or less than: maximum 100 times per hour,
5.5kw or above:maximum 20 times per hour.

3.Use Occasions

3.1.Used to deliver those non-inflammable and non-explosive materials that are quite thin, clean and without grains or fibers.
3.2.Used to pump such liquids as mineral water, softened water, purified water and clean oil etc.
3.3.Applied in the system of water treatment, filter and sanitation.
3.4.Installed in the water supply and sewerage systems of high-rise constructions.
5. Used in the agricultural irrigation and the garden sprinkling irrigation etc.

4.Specifications

BL (T) 32 - 2 - 2 - R
R:Hot water type,S:Special type (Cold-water is not marked)
Number of small impellers
Number of stages
Rated flow m^3/h)
Some of the passage components are iron castings, be absent when all the flow passage components are made of stainless steel
Type range

5.Exploded View

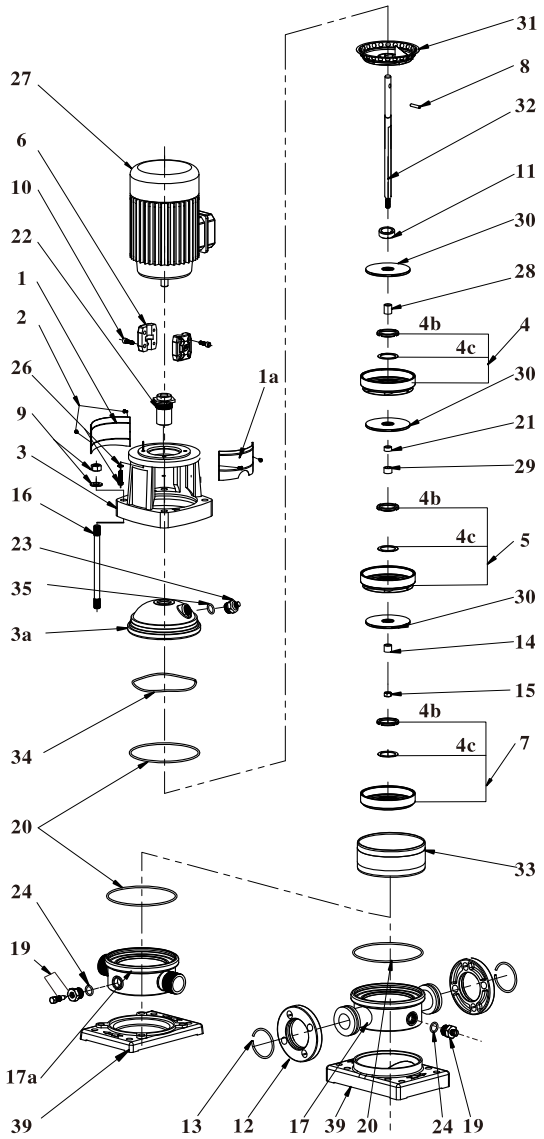

BL2,4

1、Coupling guard
1a、Coupling guard(cutout)
2、Screw M5×8
3、motor stool
3a、Pump cover
4、Chamber
4b、Neck ring retainer
4c、Neck ring complete
5、Chamber with bearing ring
6、Coupling complete
7、Inlet chamber
8、Shaft pin 5×25
9、Nut M12, Washer 12
10、Screw
11、Spacing pipe
12、Flange
13、Retaining ring
14、Bush
15、Lock nut M10
16、Staybolt
17、Base
17a、Gas thread Base
19、Drain plug G1/2
20、O-ring 142.5×3.55
21、Short spacing pipe
22、Shaft seal
23、Plug G1/4
24、O-ring17×2.65
26、Screw, Washer
27、Motor
28、Long spacing pipe
29、Bearing ring
30、Impeller
31、Outlet chamber
32、Pump shart
33、Outer sleeve
34、Disc spring
35、O-ring11.8×2.65
39、Base plate

10.2Frost period without pump,the liquid emptying pump to prevent pump damage,using the bottom of pump water valve may be excluded from the liquid in the pump,drainage,pay attention to a person or thing of security
10.3Need to replace the water drain valve,must first unscrew the valve,then unscrew the screw plug to tighten the drain plug,then tighten bypass valve.(Figure1)

11.Common Fault (exclude) Table

⚠ Before opening the teiminal box and pump,please make sure that the power supply has been disconnected and can not be opened accidentally.

Failure phenomenon	Analysis	Solution	Remark
Motor not running	a、Power failure b、Power overload c、Control circuit problem d、The fuse burned	a、Check power supply b、Check the system c、Check control circuit d、Change the fuse	Professional electrician check
Pump operation without water	a、Suction is too high b、Less water in pump cavity c、Inlet pipe or pump cavity with air	a、Lower installation height b、Increase water storage c、Exhaust air	
Pump operation with inadequate flow	a、The pump reversal b、Pipeline or impeller blocked c、Mouth ring wear serious d、Choose the wrong model e、The lower voltage	a、Adjust the motor wiring b、Clean the pipeline and impeller c、Change the impeller d、Re-select model e、Adiust the voltage	c、Do not allow users to remove by themselves
Power consumption is too large	a、Not use it at rated conditions b、Motor bearing damaged c、Pump cavity parts wearing	a、Adjust the opeation conditions b、Change the motor bearing c、Change the spare parts	c、Do not allow users to remove by themselves
Pump running with noise and vibration	a、Installation is not stable b、The liquid with air c、Pump cavitation d、Damaged of the bearing or spare parts e、Motor overload operation	a、Fix the installation b、Adjust the high suction pressure and exhaust air c、Lower vacuum degree d、change the bearing or spare parts e、Adjust the normal operation	d、Do not allow users to remove by themselves
The pump water leakage	a、The mechanical seal damaged b、The O-ring damaged c、Casting with hole or broken	a、Change the mechanical seal b、Change the O-ring c、Change the spare parts	Do not allow users to remove by themselves

8.Installation Notes

To avoid any damage to the pump,please follow the below procedures before installation.

Procedure	Process	Procedure	Process
8.1 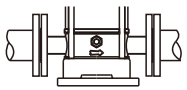	According to the direction of the arrow to install water pump outlet	8.4 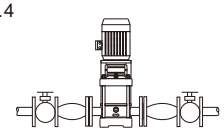	Recommended water inlet and outlet and anti shock tube in the pump
8.2 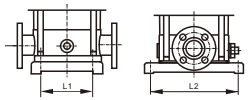	The pump base installation size, dimensions of the corresponding types of technical data	8.5 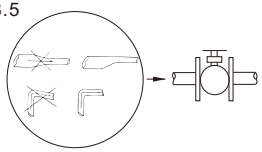	Installation of piping,to prevent the accumulation of air
8.3 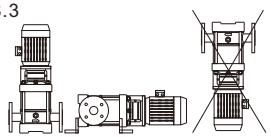	The pump can be vertical or horizontal installation,no motor rewind.To ensure that the motor is cooled sufficiently,must maintation the air cirulation	8.6 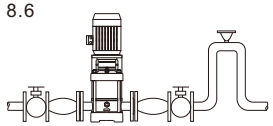	Prevent backflow,a siphon dangerous,install vacuum vent valve

9.Program Activation

- The pump is not filled with water before,please do not start the pump,in dry running conditions, water bearing and mechanical seal damage.
- The exhaust,pay attention to the water don't hurt person or thing,especially for conveying hot water scald,beware of the hot water injection.

BL(T)2,4,8,12,16,20

9.1For these pump start-up process,proposal to open the bypass valve,pump inlet and oulet is communicated, filling water into the pump,when the pump,when the pump,when the pump runs stably,locking the bypass valve.but the water gas and the working pressure is lower than 6 bar,suggested that open the bypass valve, if the working pressure is higher than that of 6 bar,must be sustained,locking the bypass valve at the outlet of the material,otherwise it will damage due to speed the flow of liquid.

9.2The air is discharged,tighen the bleeder screw using special tool.(Figure 1)

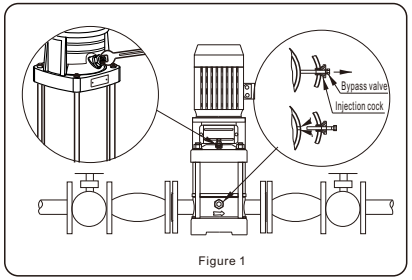

Figure 1

10.Maintence and Maintenance

Before maintenance, determine the pump should be disconnected, to prevent accidental start

10.1Pump such as longtime need not work,should remove the coupling cover,pour oil on the pump shaft to prevent mechnical sealing surface sticky,then heavy coupling cover.(Figure2)

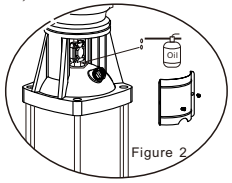

Figure 2

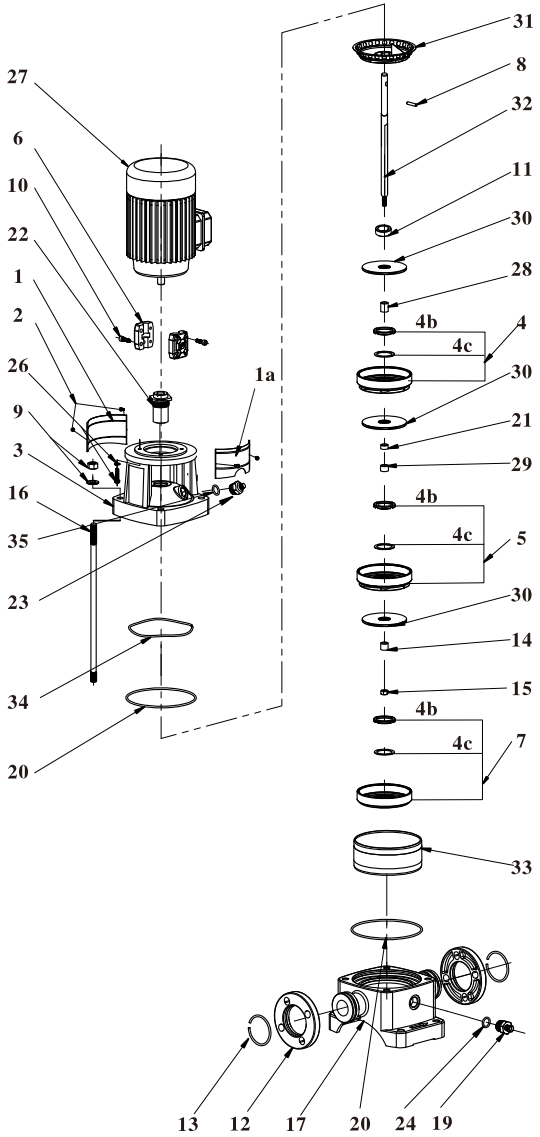

BL(T)2,4

1、Coupling guard
1a、Coupling guard(cutout)
2、Screw M5×8
3、motor stool
4、Chamber
4b、Neck ring retainer
4c、Neck ring complete
5、Chamber with bearing ring
6、Coupling complete
7、Inlet chamber
8、Shaft pin 5×25
9、Nut M12, Washer 12
10、Screw
11、Spacing pipe
12、Flange
13、Retaining ring
14、Bush
15、Lock nut M10
16、Staybolt
17、Base
19、Drain plug G1/2
20、O-ring 142.5×3.55
21、Short spacing pipe
22、Shaft seal
23、Plug G1/4
24、O-ring17×2.65
26、Screw, Washer
27、Motor
28、Long spacing pipe
29、Bearing ring
30、Impeller
31、Outlet chamber
32、Pump shart
33、Outer sleeve
34、Disc spring
35、O-ring11.8×2.65

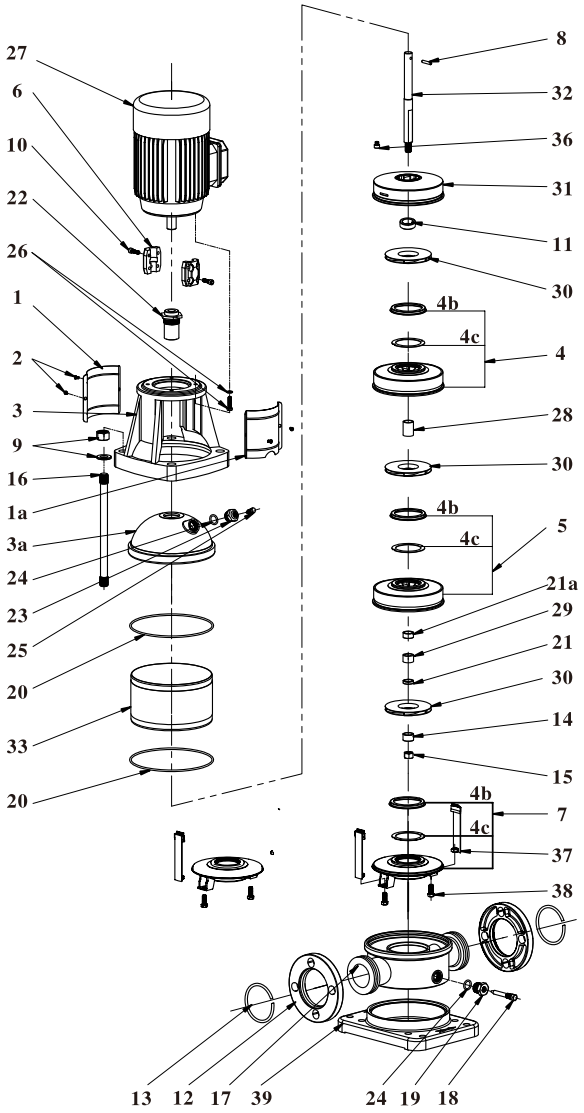

BL8,12,16,20

1、Coupling guard
1a、Coupling guard(cutout)
2、Screw M5×8
3、motor stool
3a、Pump cover
4、Chamber
4b、Neck ring retainer
4c、Neck ring complete
5、Chamber with bearing ring
6、Coupling complete
7、Inlet chamber
8、Shaft pin 5×30
9、Nut M16, Washer 16
10、Screw
11、Spacing pipe
12、Flange
13、Retaining ring
14、Bush
15、Lock nut M12
16、Staybolt
17、Base
19、Drain plug G1/2
20、O-ring 170×3.55
21、Short spacing pipeI
21a、Short spacing pipe II
22、Shaft seal
23、Plug G1/2
24、O-ring17×2.65
26、Screw, Washer
27、Motor
28、Long spacing pipe
29、Bearing ring
30、Impeller
31、Outlet chamber
32、Pump shart
33、Outer sleeve
36、Disc spring
37、Strap
38、Screw M8×20
39、Base plate

BL(T)64

Remark:
Disassembly and assembly the pump core, please follow the below sequence

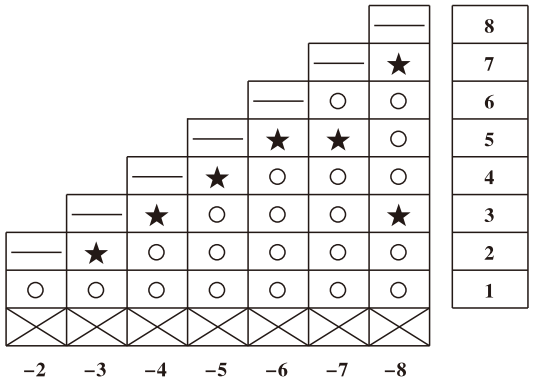

BL(T)90

Remark:
Disassembly and assembly the pump core, please follow the below sequence

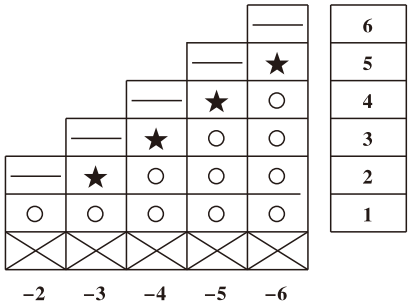

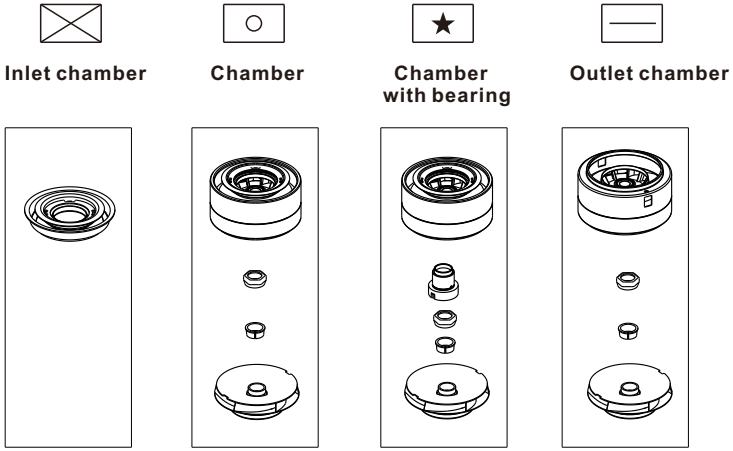

BL(T)45

Remark:
Disassembly and assembly the pump core,
please follow the below sequence

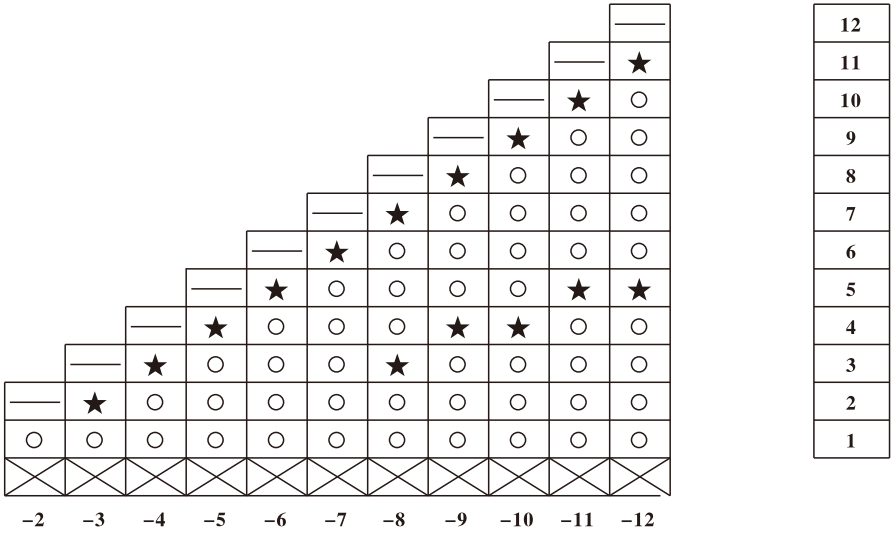

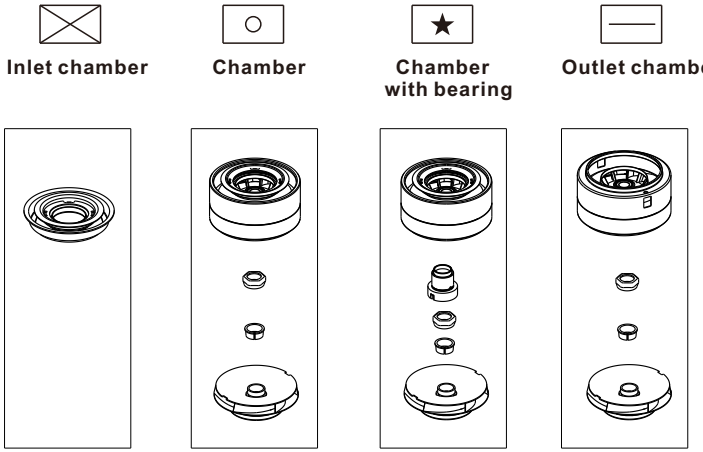

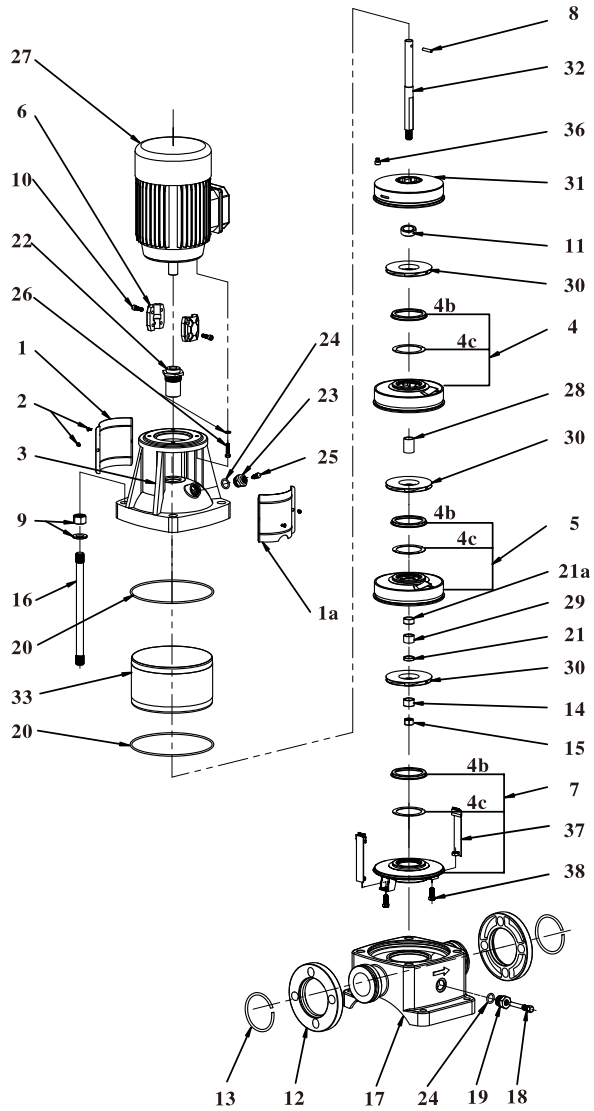

BL(T)8,12,16,20

1、Coupling guard
1a、Coupling guard(cutout)
2、Screw M5×8
3、motor stool
3a、Pump cover
4、Chamber
4b、Neck ring retainer
4c、Neck ring complete
5、Chamber with bearing ring
6、Coupling complete
7、Inlet chamber
8、Shaft pin 5×30
9、Nut M16, Washer 16
10、Screw
11、Spacing pipe
12、Flange
13、Retaining ring
14、Bush
15、Lock nut M12
16、Staybolt
17、Base
19、Drain plug G1/2
20、O-ring 170×3.55
21、Short spacing pipeI
21a、Short spacing pipe II
22、Shaft seal
23、Plug G1/2
24、O-ring17×2.65
26、Screw, Washer
27、Motor
28、Long spacing pipe
29、Bearing ring
30、Impeller
31、Outlet chamber
32、Pump shart
33、Outer sleeve
36、Disc spring
37、Strap
38、Screw M8×20

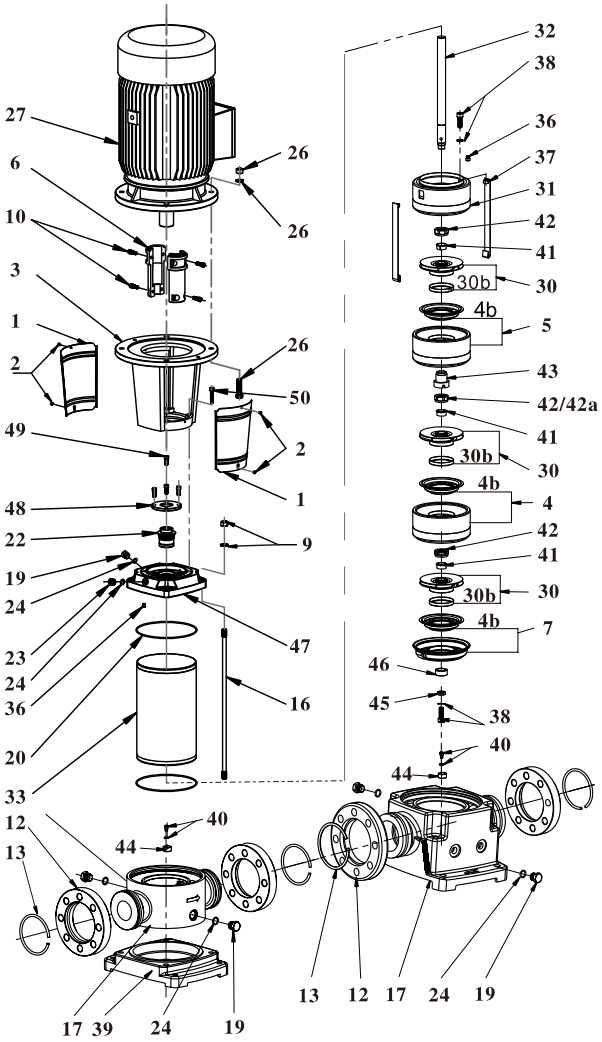

BL(T)32,45,64,90

1、Coupling guard
2、Screw M5×8
3、motor stool
4、Chamber
4b、Neck ring complete
5、Chamber with bearing ring
6、Coupling complete
7、Inlet chamber
9、Nut M16, Washer 16
10、Screw
12、Flange
13、Retaining ring
16、Staybolt
17、Base
19、Drain plug G1/2
20、O-ring
22、Shaft seal
23、Plug G1/2
24、O-ring17×2.65
26、Screw, Washer
27、Motor
30、Impeller
30b、Wear ring
31、Outlet chamber
32、Pump shart
33、Outer sleeve
36、Disc spring
37、Strap
38、Screw M8×20,Washer
39、Base plate
40、Screw M5×10, Washer
41、Split cone
42、Split cone nut
42a、Split cone nut
43、Bearing ring，rotating
44、Bearing ring
45、Washer
46、Bearing ring
47、Pump head
48、Spacer for shaft seal
49、Screw M10×25
50、Screw

BL(T)32

Remark:
Disassembly and assembly the pump core,
please follow the below sequence

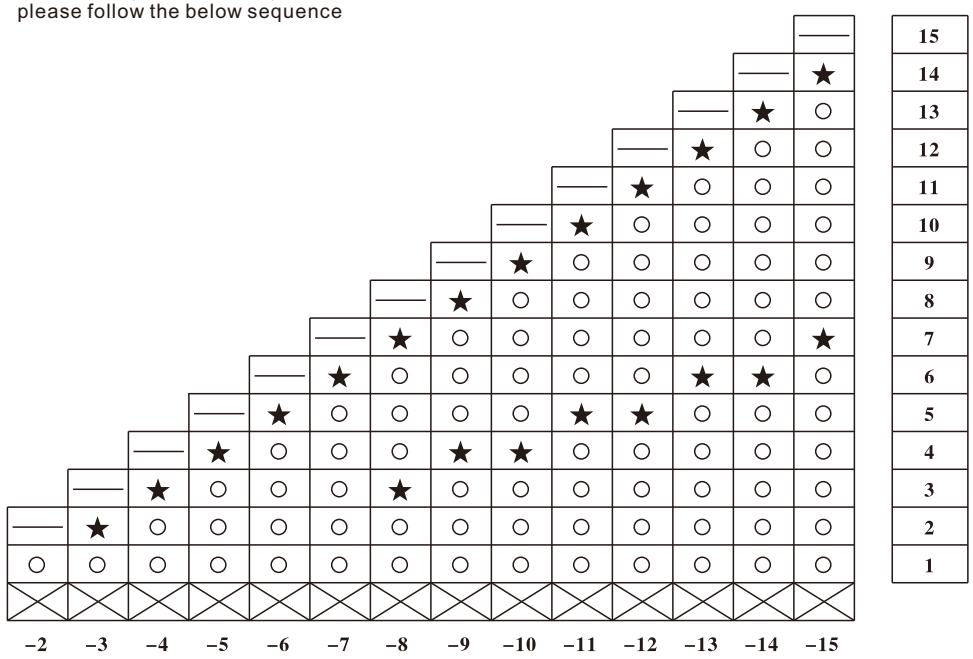

Inlet chamber　Chamber　Chamber with bearing　Outlet chamber

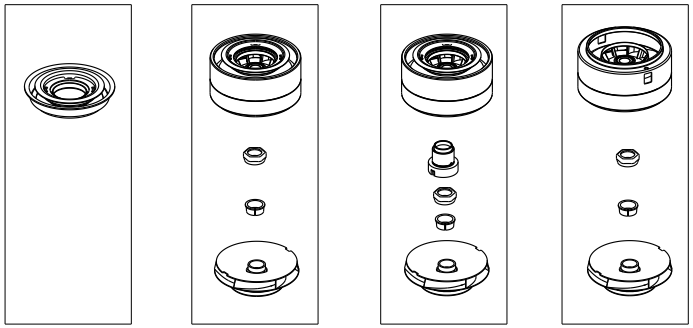

BL(T)20

Remark:
Disassembly and assembly the pump core,
please follow the below sequence

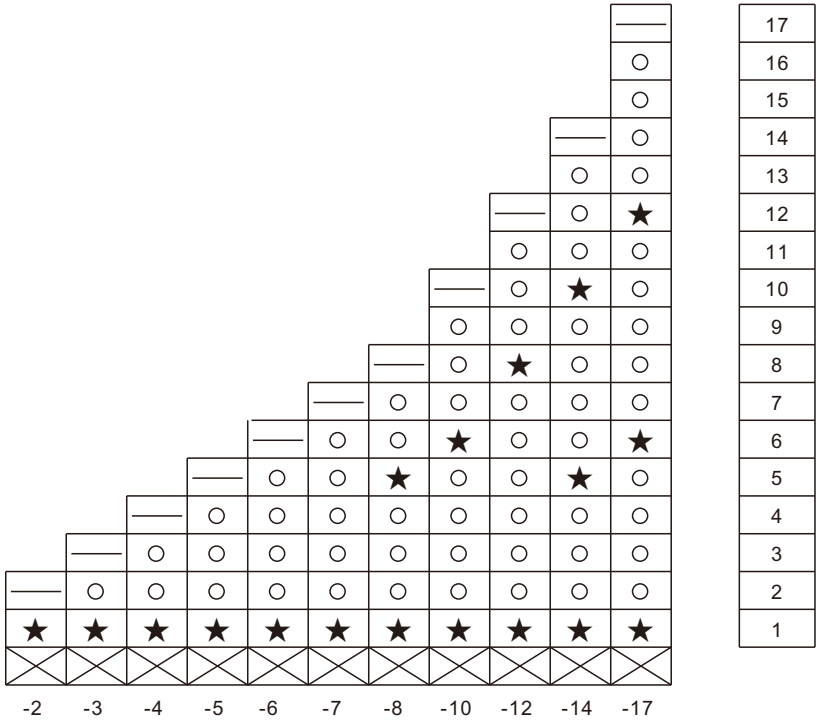

Inlet chamber | Chamber | Chamber with bearing | Outlet chamber

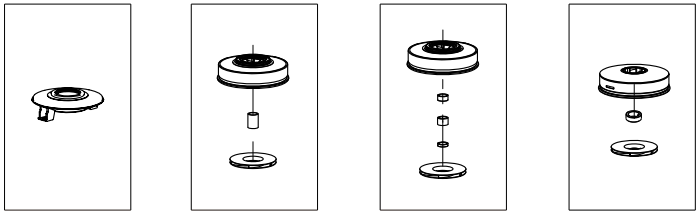

6.Technical Data

■ Performance curves

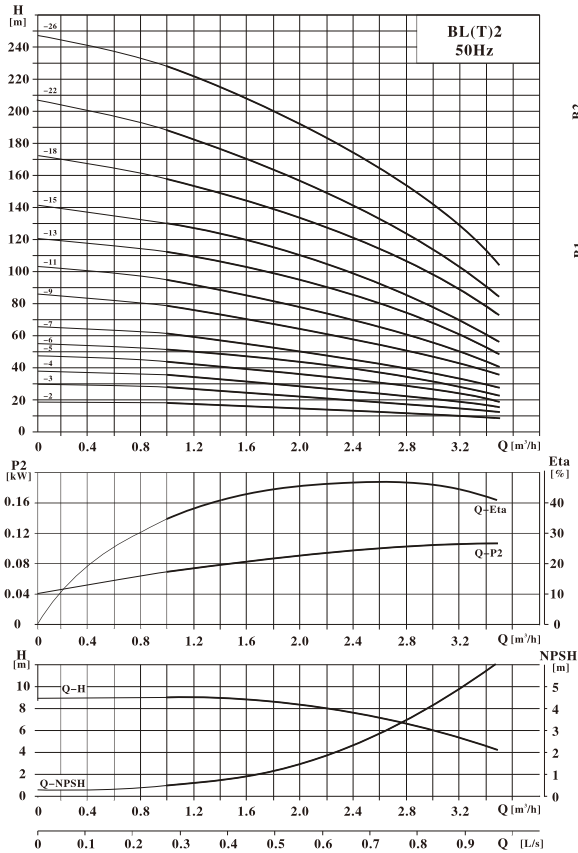

■ Installation dimensions

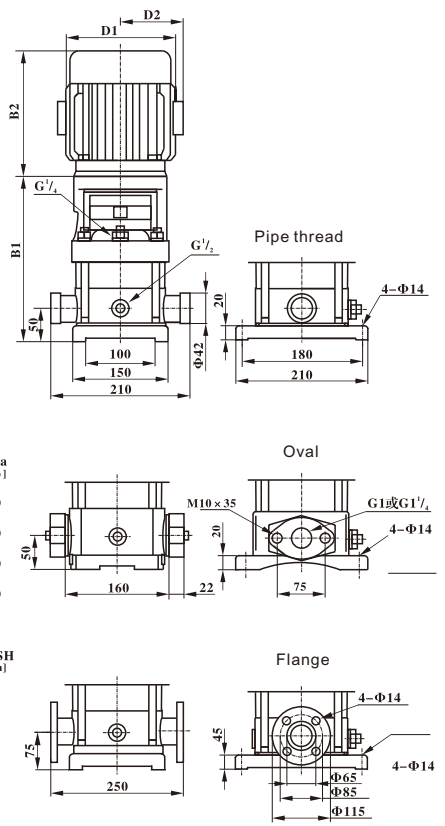

■ Performance parameters and dimensions weight

Type	Power (kW)	Q (m^3/h)	1	1.2	1.6	2	2.4	2.8	3.2	B1	B2	B1+B2	D1	D2	WT (kg)
BL(T)2-2	0.37	H (m)	17	16	15	13	12	11	9	260	220	480	135	86	21/28
BL(T)2-3	0.37		26	25	23	20	19	17	14	278	220	498	135	86	21/28
BL(T)2-4	0.55		35	34	32	27	25	24	19	296	220	516	135	86	23/29
BL(T)2-5	0.55		44	42	39	35	32	29	23	314	220	534	135	86	23/29
BL(T)2-6	0.75		51	50	48	42	38	34	28	340	255	595	148	96	27/33
BL(T)2-7	0.75		61	59	55	50	45	39	33	358	255	613	148	96	27/33
BL(T)2-9	1.1		78	76	71	65	59	52	43	394	255	649	148	96	30/36
BL(T)2-11	1.1		95	92	86	79	70	61	51	430	255	685	148	96	31/37
BL(T)2-13	1.5		113	111	103	94	86	75	62	479	300	779	166	115	35/41
BL(T)2-15	1.5		130	126	119	108	96	86	69	515	300	815	166	115	33/42
BL(T)2-18	2.2		156	152	143	130	116	103	86	569	300	869	166	115	40/46
BL(T)2-22	2.2		192	187	175	160	143	125	105	641	300	941	166	115	42/48
BL(T)2-26	3		227	223	209	190	175	153	125	722	325	1047	191	128	47/53

■ Performance curves

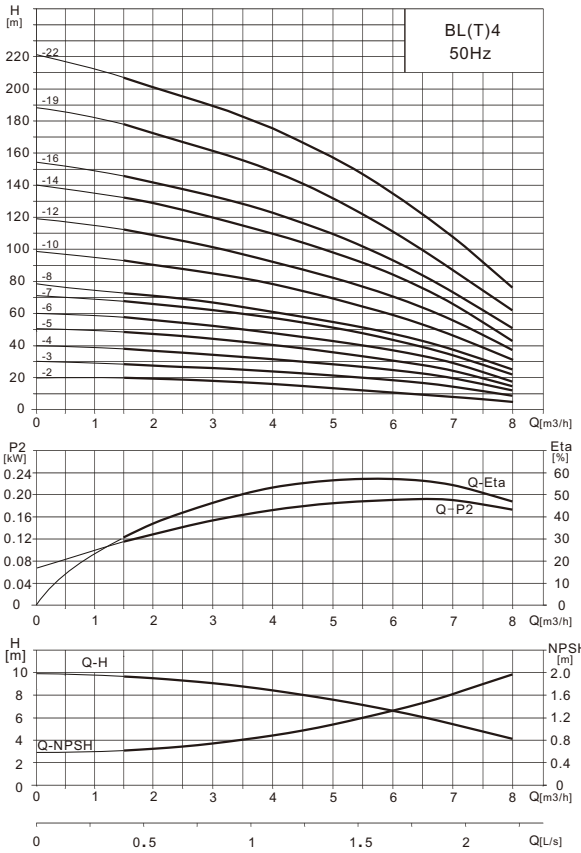

■ Installation dimensions

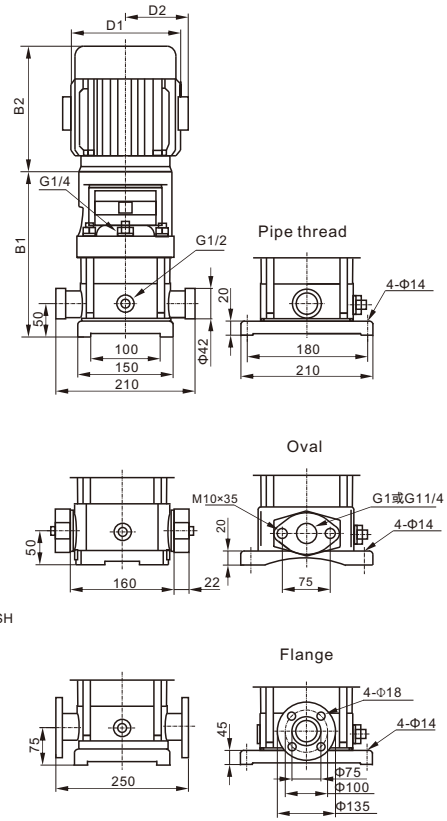

■ Performance parameters and dimensions weight

Type	Power (kW)	Q (m3/h)	1.5	2	3	4	5	6	7	B1	B2	B1+B2	D1	D2	WT (kg)
BL(T)4-2	0.37	H (m)	18	17	16	14	12	9	7	278	220	498	135	86	22/28
BL(T)4-3	0.55		27	26	25	22	19	17	12	305	220	525	135	86	24/29
BL(T)4-4	0.75		37	35	33	30	26	23	18	340	255	595	148	96	27/32
BL(T)4-5	1.1		46	44	42	38	33	30	22	367	255	622	148	96	30/35
BL(T)4-6	1.1		56	52	50	45	39	35	26	394	255	649	148	96	31/36
BL(T)4-7	1.5		64	61	59	53	46	41	31	434	300	734	166	115	34/39
BL(T)4-8	1.5		72	70	68	61	53	48	36	461	300	761	166	115	35/40
BL(T)4-10	2.2		93	87	84	77	68	59	45	515	300	815	166	115	38/44
BL(T)4-12	2.2		111	105	101	93	82	72	55	569	300	869	166	115	40/45
BL(T)4-14	3		132	122	118	108	97	85	64	632	325	957	191	140	45/50
BL(T)4-16	3		148	140	136	124	111	97	74	686	325	1011	191	140	46/51
BL(T)4-19	4		178	166	163	147	132	117	88	767	355	1122	212	163	52/58
BL(T)4-22	4		205	194	186	170	154	132	102	848	355	1203	212	163	54/59

BL(T)16

Remark:
Disassembly and assembly the pump core,
please follow the below sequence

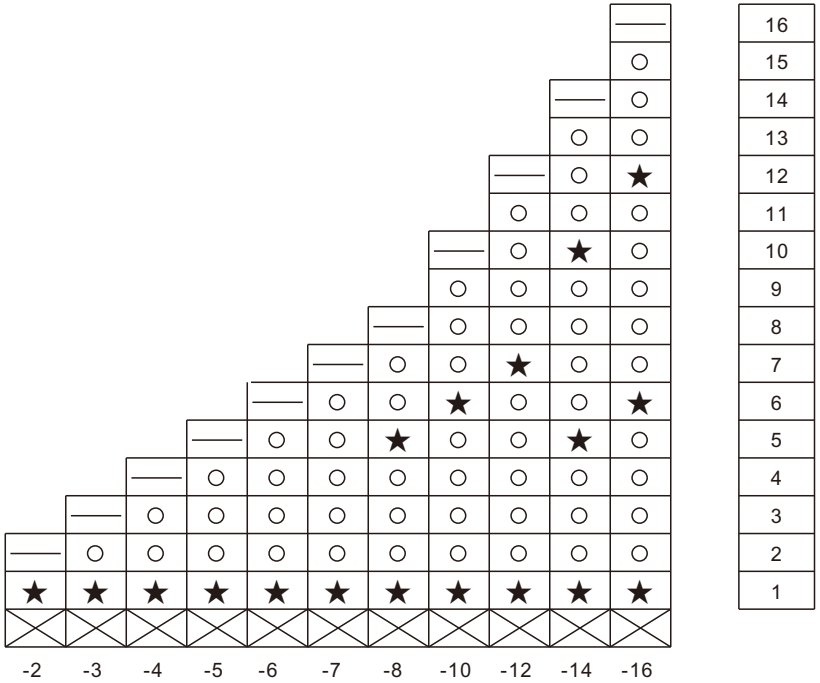

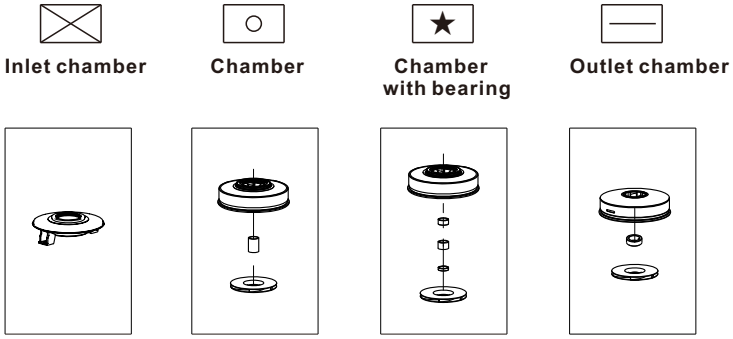

BL(T)12

Remark:
Disassembly and assembly the pump core,
please follow the below sequence

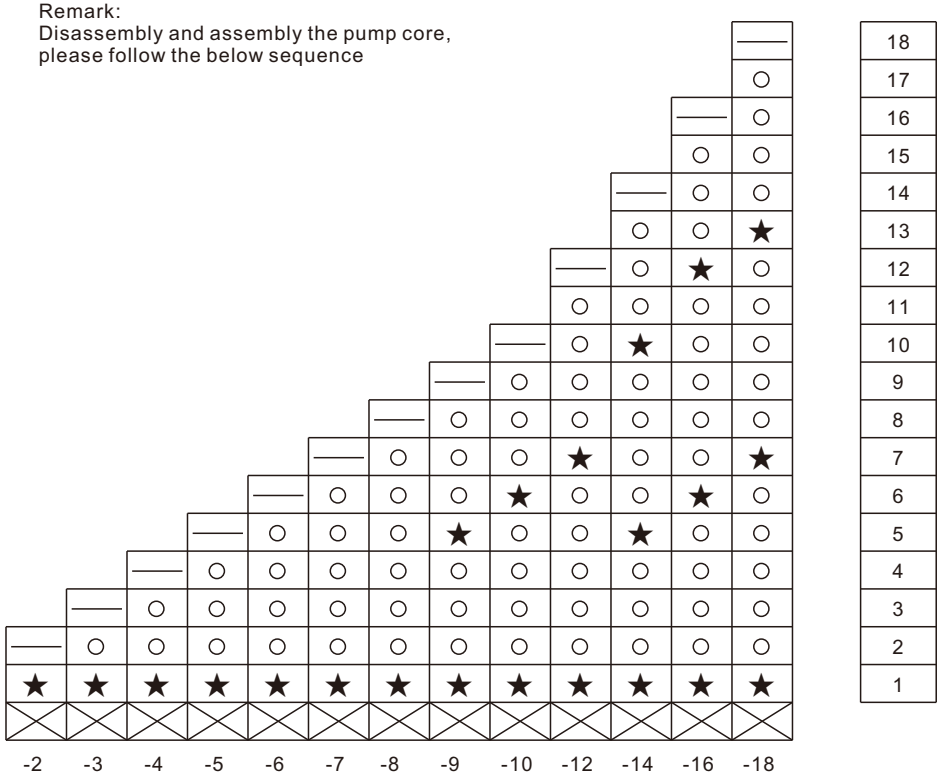

Inlet chamber

Chamber

Chamber with bearing

Outlet chamber

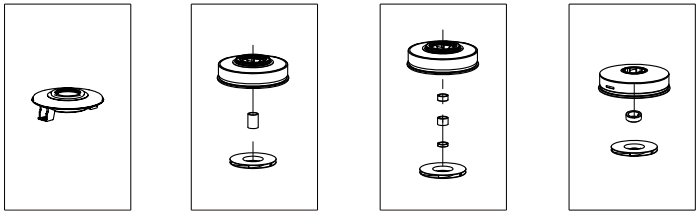

■ Performance curves

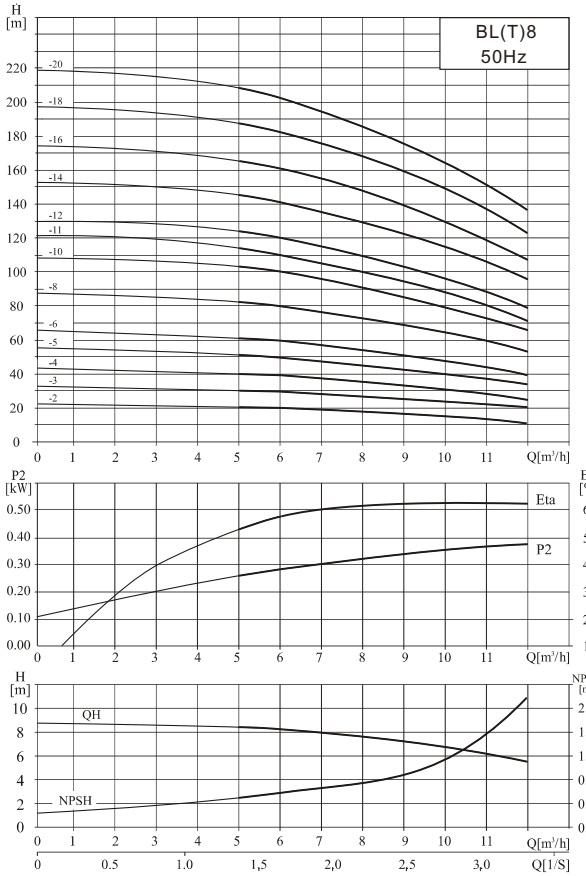

■ Installation dimensions

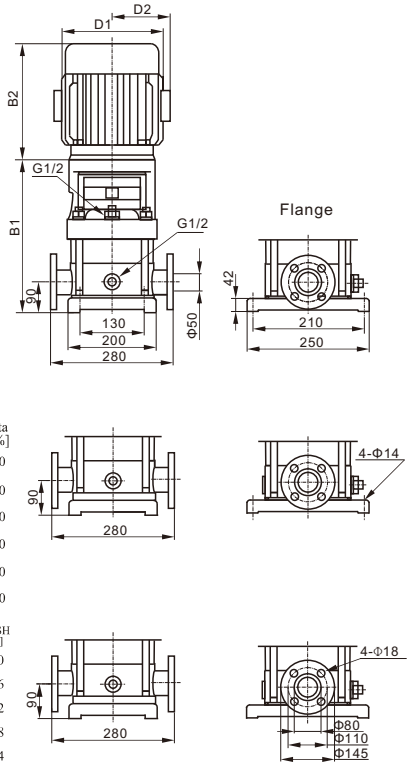

■ Performance parameters and dimensions weight

Type	Power (kW)	Q (m3/h)	5	6	7	8	9	10	11	B1	B2	B1+B2	D1	D2	WT (kg)
BL(T)8-2	0.75	H (m)	20	19	18	16	15	14	13	375	255	622	148	96	36/43
BL(T)8-3	1.1		30	29	28	25	24	23	22	405	255	652	148	96	39/46
BL(T)8-4	1.5		40	39	38	34	32	31	29	440	300	700	166	115	43/50
BL(T)8-5	2.2		51	49	47	43	41	40	36	470	300	755	166	115	47/54
BL(T)8-6	2.2		60	58	56	51	49	47	43	500	300	785	166	115	48/55
BL(T)8-8	3		81	78	76	70	66	63	58	570	325	893	191	128	54/61
BL(T)8-10	4		101	97	94	87	83	77	72	630	355	971	212	140	61/68
BL(T)8-11	4		111	107	103	96	91	85	79	660	355	1001	212	140	62/69
BL(T)8-12	5.5		122	117	113	105	102	94	87	715	395	1110	258	163	80/88
BL(T)8-14	5.5		142	136	132	122	119	109	101	774	395	1169	258	163	82/90
BL(T)8-16	5.5		162	156	151	140	136	126	116	834	395	1229	258	163	85/93
BL(T)8-18	7.5		182	175	170	157	153	141	130	894	395	1289	258	163	91/99
BL(T)8-20	7.5		203	195	189	175	170	157	145	954	395	1349	258	163	93/101

■ Performance curves

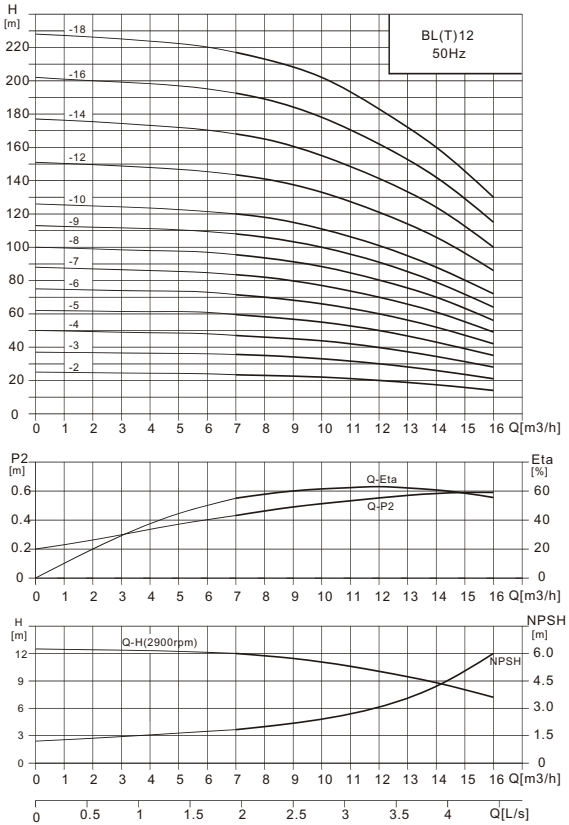

■ Installation dimensions

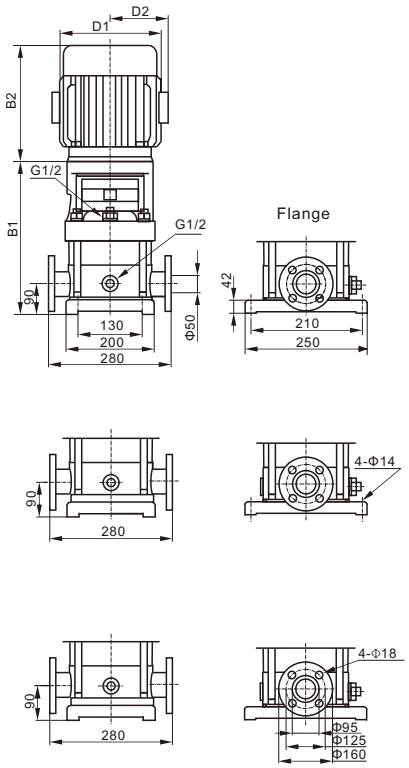

■ Performance parameters and dimensions weight

Type	Power (kW)	Q (m3/h)	7	8	10	12	14	15	16	B1	B2	B1+B2	D1	D2	WT (kg)
BL(T)12-2	1.5	H (m)	23.5	23	22	20	17	15	14	383	300	683	166	115	42/49
BL(T)12-3	2.2		35.5	35	33	30	26	23	21	415	300	715	166	115	45/52
BL(T)12-4	3		47	46	44	40	34	31	28	456	325	781	191	128	50/58
BL(T)12-5	3		59.5	58	55	50	43	39	35	488	325	813	191	128	51/59
BL(T)12-6	4		71.5	70	66	60	52	47	42	519	355	874	212	140	57/65
BL(T)12-7	5.5		83.5	82	77	70	61	55	49	575	395	970	258	163	75/86
BL(T)12-8	5.5		95.5	94	88	80	70	63	56	606	395	1001	258	163	76/87
BL(T)12-9	5.5		108	106	100	91	79	71	64	638	395	1033	258	163	77/88
BL(T)12-10	7.5		120	118	111	101	88	80	72	669	395	1064	258	163	83/95
BL(T)12-12	7.5		143.5	141	133	121	106	96	86	733	395	1128	258	163	86/97
BL(T)12-14	11		168	165	155	141	124	112	100	825	498	1323	315	251	165/179
BL(T)12-16	11		192.5	189	178	162	142	128	115	888	498	1386	315	251	168/182
BL(T)12-18	11		217	213	202	183	160	145	130	951	498	1449	315	251	170/185

BL(T)8

Remark:
Disassembly and assembly the pump core, please follow the below sequence

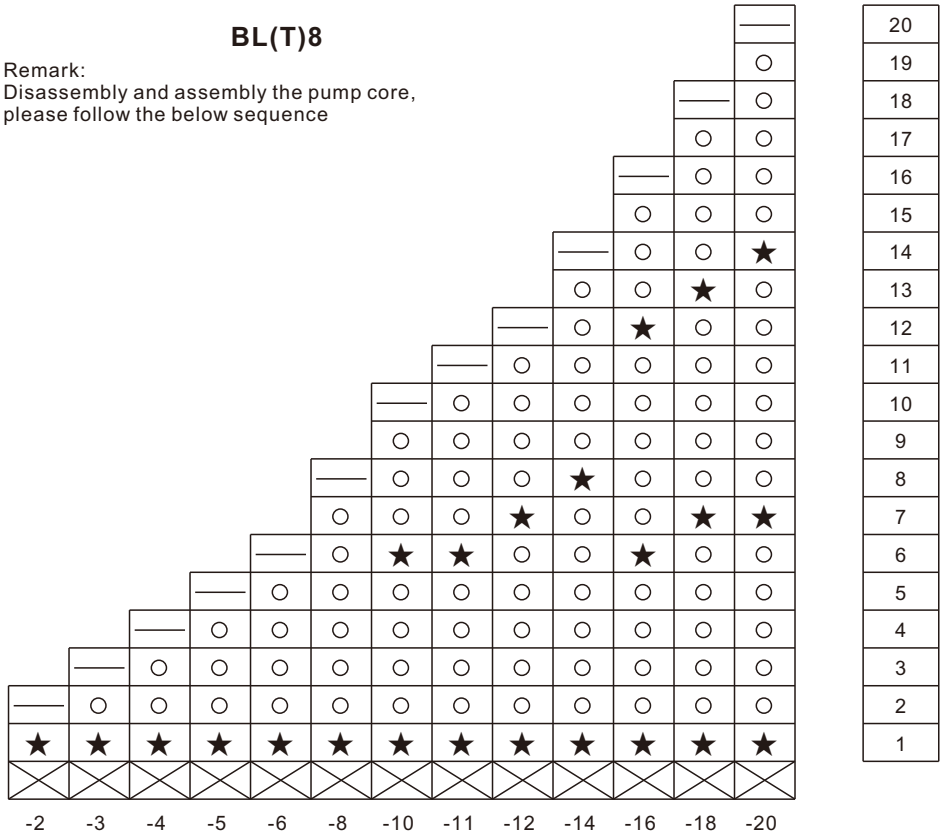

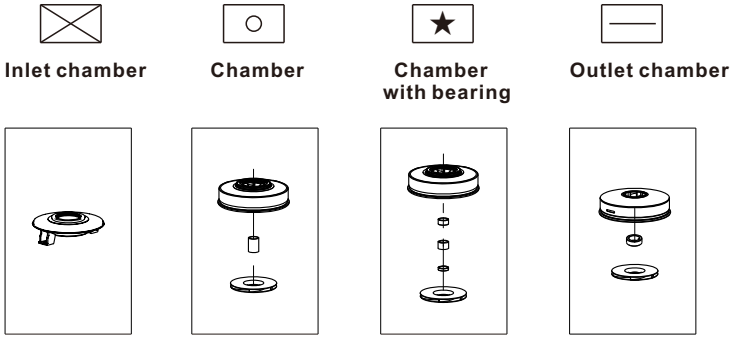

BL(T)4

Remark:
Disassembly and assembly the pump core,
please follow the below sequence

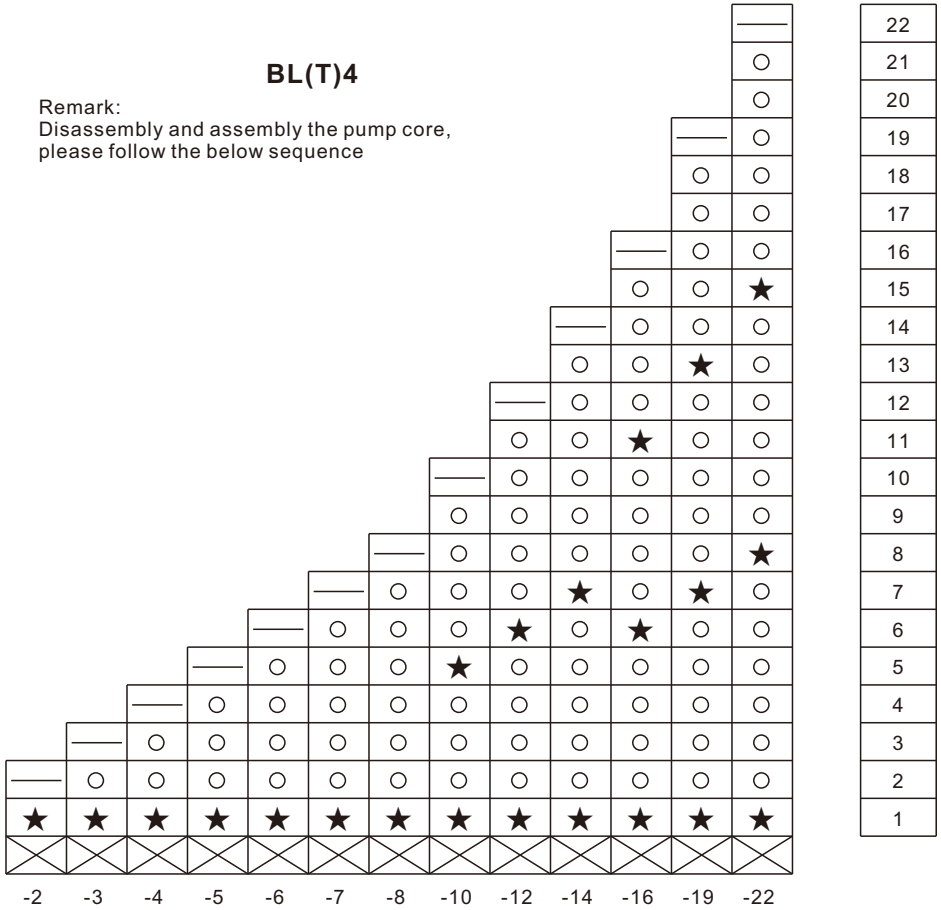

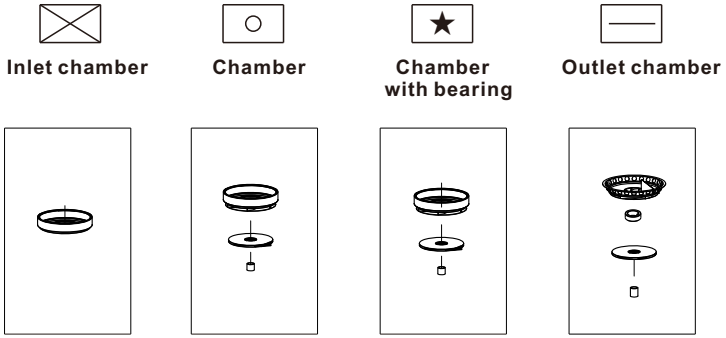

■ Performance curves

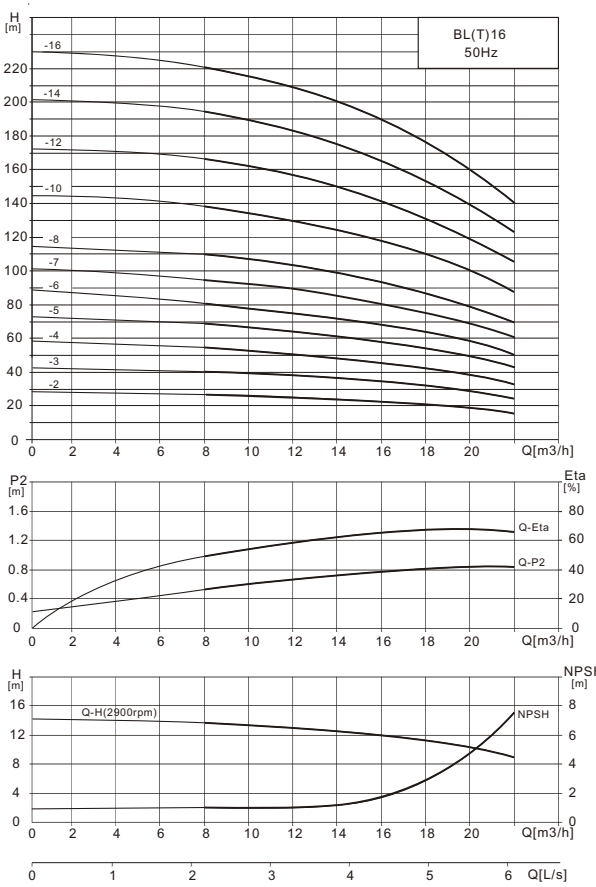

■ Installation dimensions

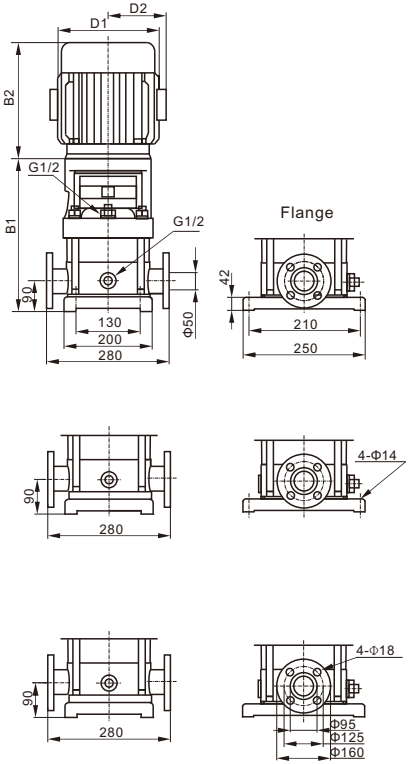

■ Performance parameters and dimensions weight

Type	Power (kW)	Q (m3/h)	8	10	12	14	16	18	20	B1	B2	B1+B2	D1	D2	WT (kg)
BL(T)16-2	2.2	H (m)	28	27	26	25	22	21	17	410	300	710	166	115	45/52
BL(T)16-3	3		42	41	39	37	34	32	29	465	325	790	191	128	50/57
BL(T)16-4	4		56	54	52	50	46	44	38	510	355	865	212	140	56/63
BL(T)16-5	5.5		69	68	65	62	57	54	48	581	395	976	258	163	75/83
BL(T)16-6	5.5		83	81	78	75	69	64	58	626	395	1021	258	163	77/85
BL(T)16-7	7.5		97	95	92	87	80	75	68	671	395	1066	258	163	82/90
BL(T)16-8	7.5		111	108	105	100	92	86	77	716	395	1111	258	163	84/92
BL(T)16-10	11		139	136	131	125	115	108	97	837	498	1335	315	251	165/173
BL(T)16-12	11		167	163	157	150	138	129	116	927	498	1425	315	251	168/176
BL(T)16-14	15		194	190	184	175	161	151	136	1017	498	1515	315	251	181/189
BL(T)16-16	15		222	217	210	200	184	176	155	1107	498	1605	315	251	184/192

■ Performance curves

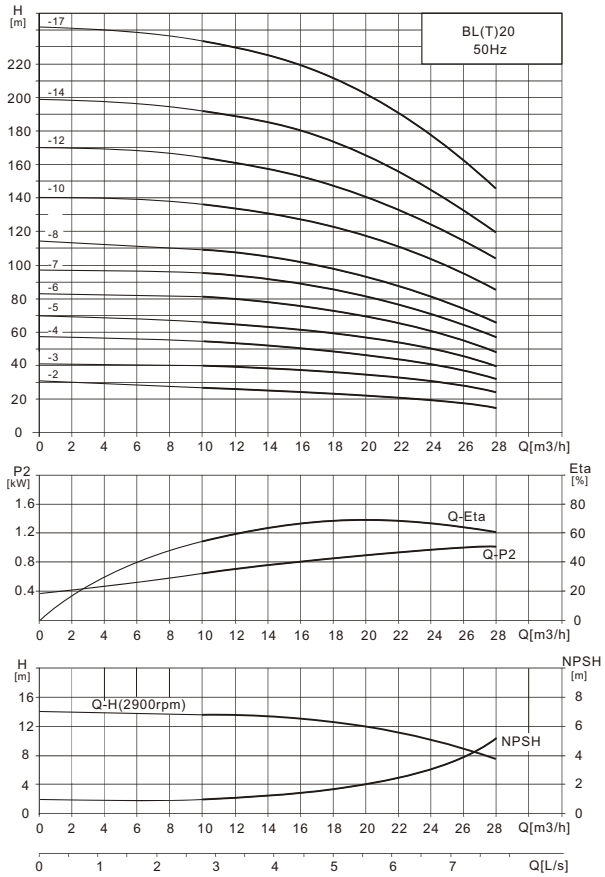

■ Installation dimensions

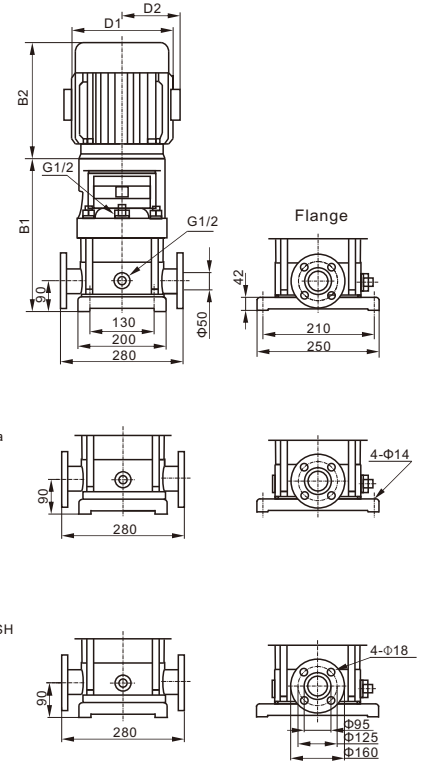

■Performance parameters and dimensions weight

Type	Power (kW)	Q (m3/h)	14	16	18	20	22	24	28	B1	B2	B1+B2	D1	D2	WT (kg)
BL(T)20-2	2.2		26	25	24	22	21	20	15	410	300	710	166	115	45/54
BL(T)20-3	4		39	38	37	34	32	30	24	465	355	800	212	140	55/64
BL(T)20-4	5.5		52	51	49	45	43	40	33	536	395	931	258	163	73/83
BL(T)20-5	5.5		64	62	60	56	54	51	40	581	395	976	258	163	75/83
BL(T)20-6	7.5		77	75	73	68	66	61	49	626	395	1021	258	163	81/91
BL(T)20-7	7.5		91	89	86	80	75	70	58	671	395	1066	258	163	83/93
BL(T)20-8	11	H (m)	105	102	99	92	86	81	67	747	498	1245	315	251	162/172
BL(T)20-10	11		131	128	124	115	111	102	85	837	498	1335	315	251	165/175
BL(T)20-12	15		158	154	149	138	130	123	102	927	498	1425	315	251	179/189
BL(T)20-14	15		185	180	174	161	152	144	119	1017	498	1515	315	251	182/192
BL(T)20-17	18.5		225	219	212	196	185	175	145	1152	542	1694	315	251	201/211

7.Chamber and Impeller Assembly Sequence Schematic

BL(T)2

Remark:
Disassembly and assembly the pump core, please follow the below sequence

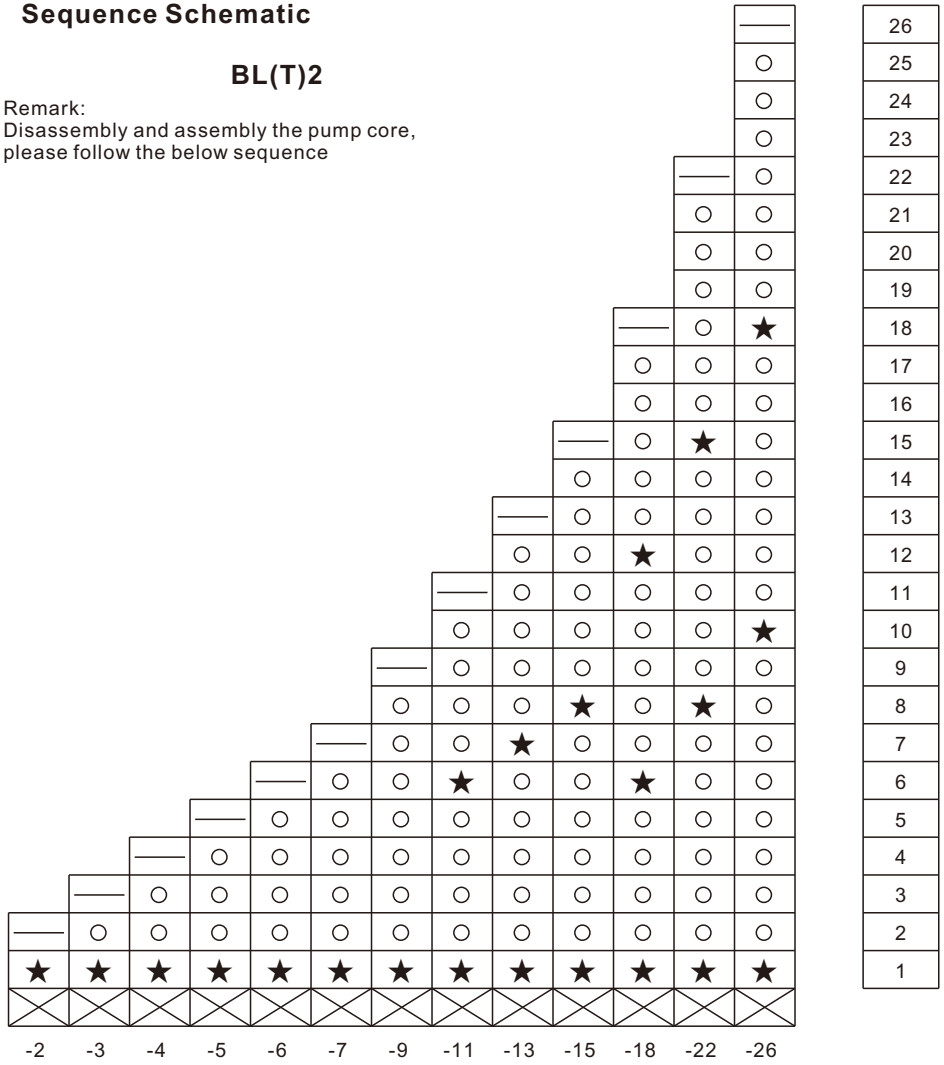

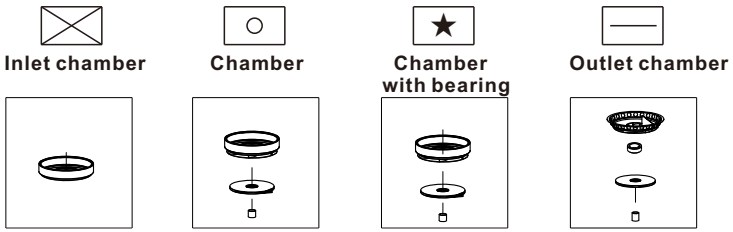

■ Performance curves

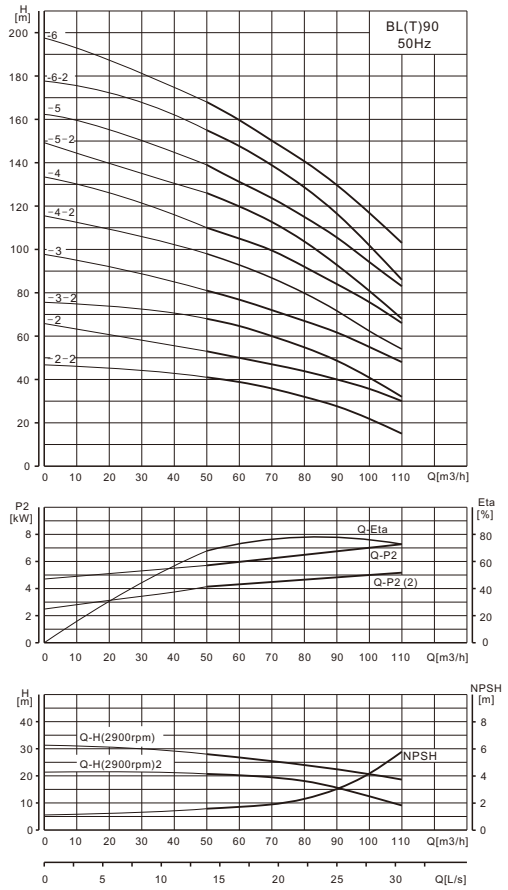

■ Installation dimensions

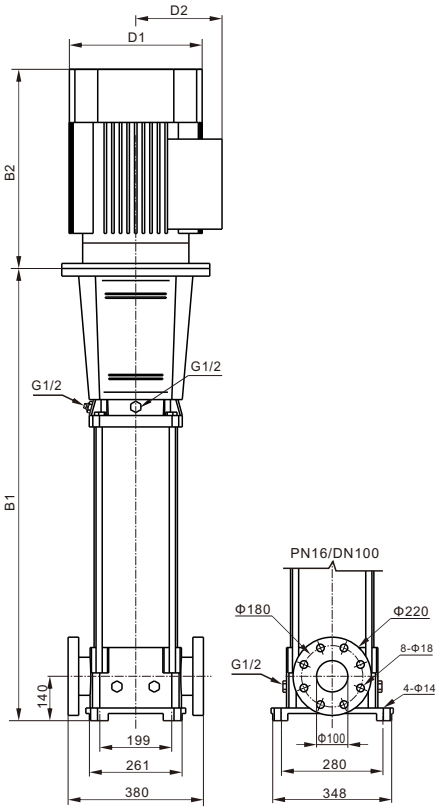

■ Performance parameters and dimensions weight

Type	Power (kW)	Q (m3/h)	50	60	70	80	90	100	110	B1	B2	B1+B2	D1	D2	WT (kg)
BL(T)90-2-2	11		41	39	36	32	28	22	15	771	498	1269	314	251	161
BL(T)90-2	15		53	50	47	44	40	36	30	771	498	1269	314	251	175
BL(T)90-3-2	18.5		68	65	60	55	49	41	32	863	542	1405	314	251	238
BL(T)90-3	22		81	77	72	67	62	55	48	863	578	1441	355	267	275
BL(T)90-4-2	30	H (m)	98	93	87	80	72	62	50	955	669	1624	397	299	330
BL(T)90-4	30		110	105	100	92	84	76	66	955	669	1624	397	299	330
BL(T)90-5-2	37		126	120	113	104	93	81	68	1047	669	1716	397	299	370
BL(T)90-5	37		139	131	124	115	106	94	83	1047	669	1716	397	299	370
BL(T)90-6-2	45		155	148	139	129	117	102	86	1139	709	1848	446	322	460
BL(T)90-6	45		168	160	150	141	130	117	103	1139	709	1848	446	322	460

■ Performance curves

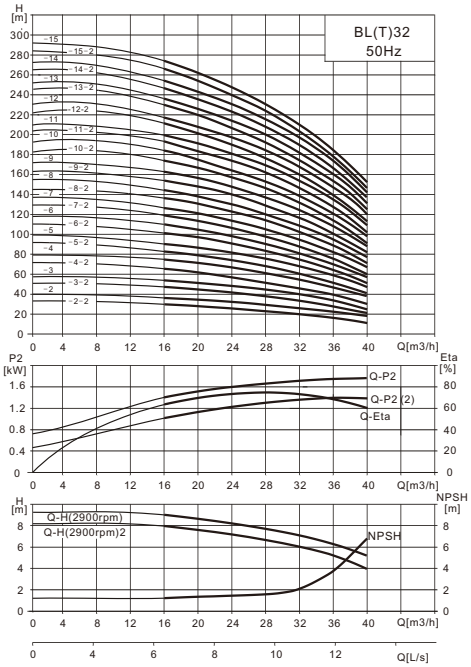

■ Installation dimensions

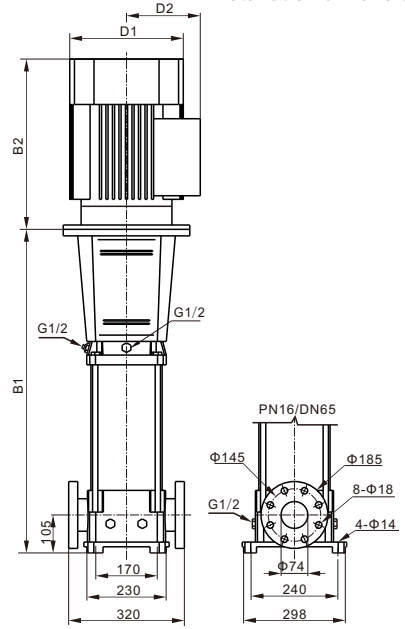

■ Performance parameters and dimensions weight

Type	Power (kW)	Q (m3/h)	16	20	24	28	32	36	40	B1	B2	B1+B2	D1	D2	WT (kg)
BL(T)32-2-2	3		29	28	26	23	20	16	11	634	325	959	191	140	81
BL(T)32-2	4		36	34	32	29	27	23	18	634	355	989	212	163	85
BL(T)32-3-2	5.5		47	44	41	38	33	28	21	724	395	1119	258	163	95
BL(T)32-3	5.5		54	51	48	44	40	35	27	724	395	1119	258	163	95
BL(T)32-4-2	7.5		65	62	58	53	46	40	30	794	395	1189	258	163	105
BL(T)32-4	7.5		72	69	65	59	53	47	37	794	395	1189	258	163	105
BL(T)32-5-2	11		83	79	74	68	60	52	41	894	498	1392	315	251	175
BL(T)32-5	11		90	86	81	74	67	59	47	894	498	1392	315	251	175
BL(T)32-6-2	11		101	97	90	83	74	65	51	964	498	1462	315	251	180
BL(T)32-6	11		108	104	97	90	81	72	57	964	498	1462	315	251	180
BL(T)32-7-2	15		119	114	107	98	88	78	60	1034	498	1532	315	251	190
BL(T)32-7	15		126	121	113	105	95	85	67	1034	498	1532	315	251	190
BL(T)32-8-2	15	H (m)	136	131	123	114	102	90	71	1104	498	1602	315	251	195
BL(T)32-8	15		144	138	130	120	109	97	77	1104	498	1602	315	251	195
BL(T)32-9-2	18.5		154	148	140	129	117	102	82	1174	542	1716	315	251	220
BL(T)32-9	18.5		162	156	147	136	124	109	88	1174	542	1716	315	251	220
BL(T)32-10-2	18.5		175	166	157	146	131	115	91	1244	542	1786	315	251	225
BL(T)32-10	18.5		182	173	164	152	138	122	98	1244	542	1786	315	251	225
BL(T)32-11-2	22		193	184	173	164	146	128	102	1314	578	1892	355	267	260
BL(T)32-11	22		200	191	180	168	153	135	109	1314	578	1892	355	267	260
BL(T)32-12-2	22		211	201	189	178	160	140	113	1384	578	1962	355	267	265
BL(T)32-12	22		218	208	196	184	167	147	120	1384	578	1962	355	267	265
BL(T)32-13-2	30		230	218	206	193	174	153	124	1454	669	2123	397	299	330
BL(T)32-13	30		237	225	213	200	181	160	131	1454	669	2123	397	299	330
BL(T)32-14-2	30		247	235	222	210	189	165	135	1524	669	2193	397	299	335
BL(T)32-14	30		255	242	229	216	196	172	142	1524	669	2193	397	299	335
BL(T)32-15-2	30		266	253	239	224	203	178	145	1594	669	2263	397	299	340
BL(T)32-15	30		274	260	246	231	210	185	152	1594	669	2263	397	299	340

■ Performance curves

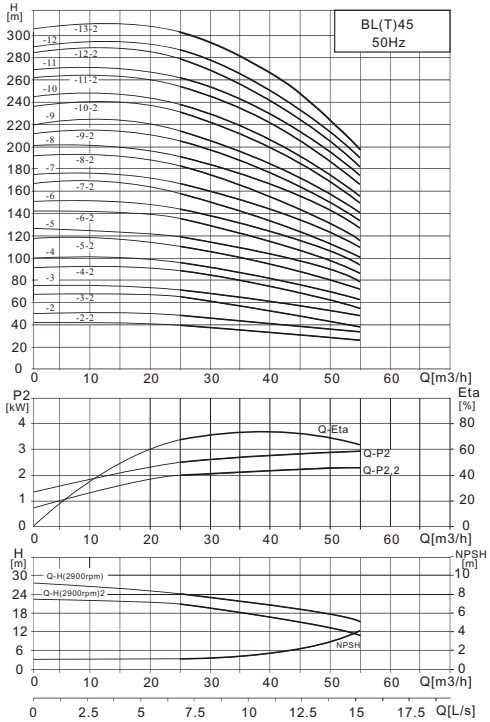

■ Installation dimensions

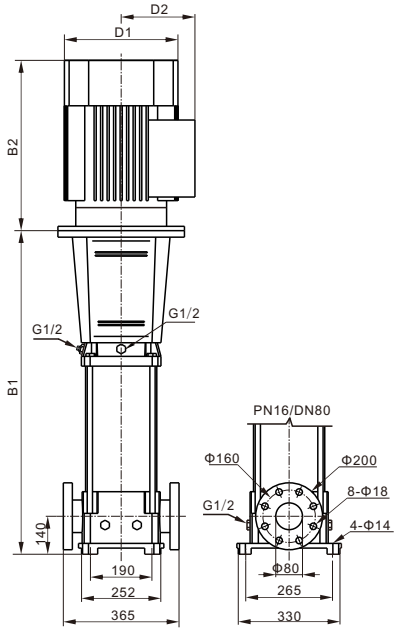

■ Performance parameters and dimensions weight

Type	Power (kW)	Q (m3/h)	25	30	35	40	45	50	55	B1	B2	B1+B2	D1	D2	WT (kg)
BL(T)45-2-2	5.5		40	38	36	33	30	27	23	716	395	1111	258	163	107
BL(T)45-2	7.5		48	46	44	42	39	35	31	716	395	1111	258	163	110
BL(T)45-3-2	11		63	61	58	54	50	44	38	826	498	1324	315	251	180
BL(T)45-3	11		71	69	66	63	58	53	47	826	498	1324	315	251	180
BL(T)45-4-2	15		87	84	80	75	69	62	54	906	498	1404	315	251	190
BL(T)45-4	15		95	92	88	84	78	71	62	906	498	1404	315	251	190
BL(T)45-5-2	18.5		111	107	102	96	88	80	69	986	542	1528	315	251	210
BL(T)45-5	18.5		119	115	110	105	97	88	78	986	542	1528	315	251	210
BL(T)45-6-2	22		135	130	124	117	108	97	85	1066	578	1644	355	267	255
BL(T)45-6	22		143	138	132	125	116	106	93	1066	578	1644	355	267	255
BL(T)45-7-2	30	H (m)	158	152	146	138	127	115	100	1146	669	1815	397	299	320
BL(T)45-7	30		166	161	154	146	135	124	109	1146	669	1815	397	299	320
BL(T)45-8-2	30		182	175	168	159	146	133	116	1226	669	1895	397	299	325
BL(T)45-8	30		190	184	176	167	154	141	124	1226	669	1895	397	299	325
BL(T)45-9-2	30		205	198	190	180	166	150	132	1306	669	1975	397	299	345
BL(T)45-9	37		214	207	198	188	174	159	140	1386	669	2055	397	299	345
BL(T)45-10-2	37		230	221	212	200	185	168	147	1386	669	2055	397	299	350
BL(T)45-10	37		238	230	220	209	193	177	155	1466	669	2135	446	299	350
BL(T)45-11-2	45		255	246	236	223	206	188	165	1466	709	2175	446	322	415
BL(T)45-11	45		263	255	244	232	214	196	173	1546	709	2255	446	322	415
BL(T)45-12-2	45		280	270	259	245	226	206	181	1546	709	2255	446	322	420
BL(T)45-12	45		289	280	268	255	236	216	190	1626	709	2335	446	322	420
BL(T)45-13-2	45		305	294	282	267	247	225	198	1626	709	2335	446	322	425

■ Performance curves

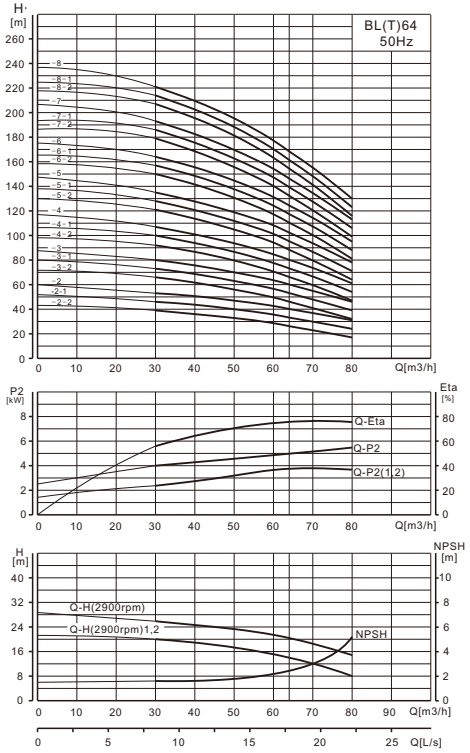

■ Installation dimensions

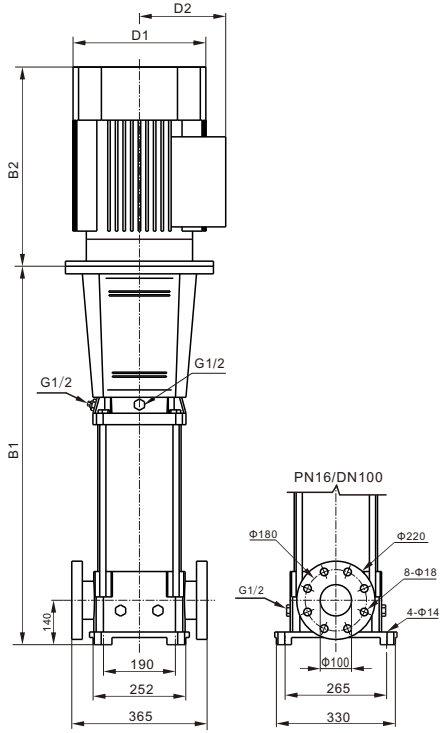

■ Performance parameters and dimensions weight

Type	Power (kW)	Q (m3/h)	30	40	50	60	64	70	80	B1	B2	B1+B2	D1	D2	WT (kg)
BL(T)64-2-2	7.5		39	36	33	29	26	23	17	685	390	1075	259	203	103
BL(T)64-2-1	11		46	44	40	36	33	30	24	715	498	1213	314	251	150
BL(T)64-2	11		53	51	47	43	40	37	31	715	498	1213	314	251	150
BL(T)64-3-2	15		66	62	56	50	46	41	32	825	498	1323	314	251	163
BL(T)64-3-1	15		73	69	63	57	53	48	39	825	498	1323	314	251	163
BL(T)64-3	18.5		80	76	71	65	60	56	46	825	542	1367	314	251	163
BL(T)64-4-2	18.5		92	87	80	71	66	60	47	905	542	1447	314	251	233
BL(T)64-4-1	22		100	94	87	78	73	67	54	905	578	1483	355	267	270
BL(T)64-4	22		107	101	94	85	80	74	61	905	578	1483	355	267	270
BL(T)64-5-2	30	H (m)	121	114	105	95	88	80	64	985	669	1653	397	299	330
BL(T)64-5-1	30		128	121	112	102	95	87	71	985	669	1653	397	299	330
BL(T)64-5	30		136	129	119	109	102	94	78	985	669	1653	397	299	330
BL(T)64-6-2	30		150	142	131	118	110	101	81	1065	669	1734	397	299	337
BL(T)64-6-1	37		157	149	138	125	117	108	88	1065	669	1734	397	299	370
BL(T)64-6	37		164	156	145	132	124	115	95	1065	669	1734	397	299	370
BL(T)64-7-2	37		179	169	156	141	132	121	99	1145	669	1814	397	299	398
BL(T)64-7-1	37		186	176	163	148	139	128	106	1145	669	1814	397	299	398
BL(T)64-7	45		193	183	170	155	146	135	112	1145	709	1854	446	322	456
BL(T)64-8-2	45		207	196	182	164	154	142	116	1225	709	1934	446	322	460
BL(T)64-8-1	45		214	203	189	171	161	149	123	1225	709	1934	446	322	460
BL(T)64-8	45		221	210	196	178	168	156	130	1225	709	1934	446	322	460