Hermann®
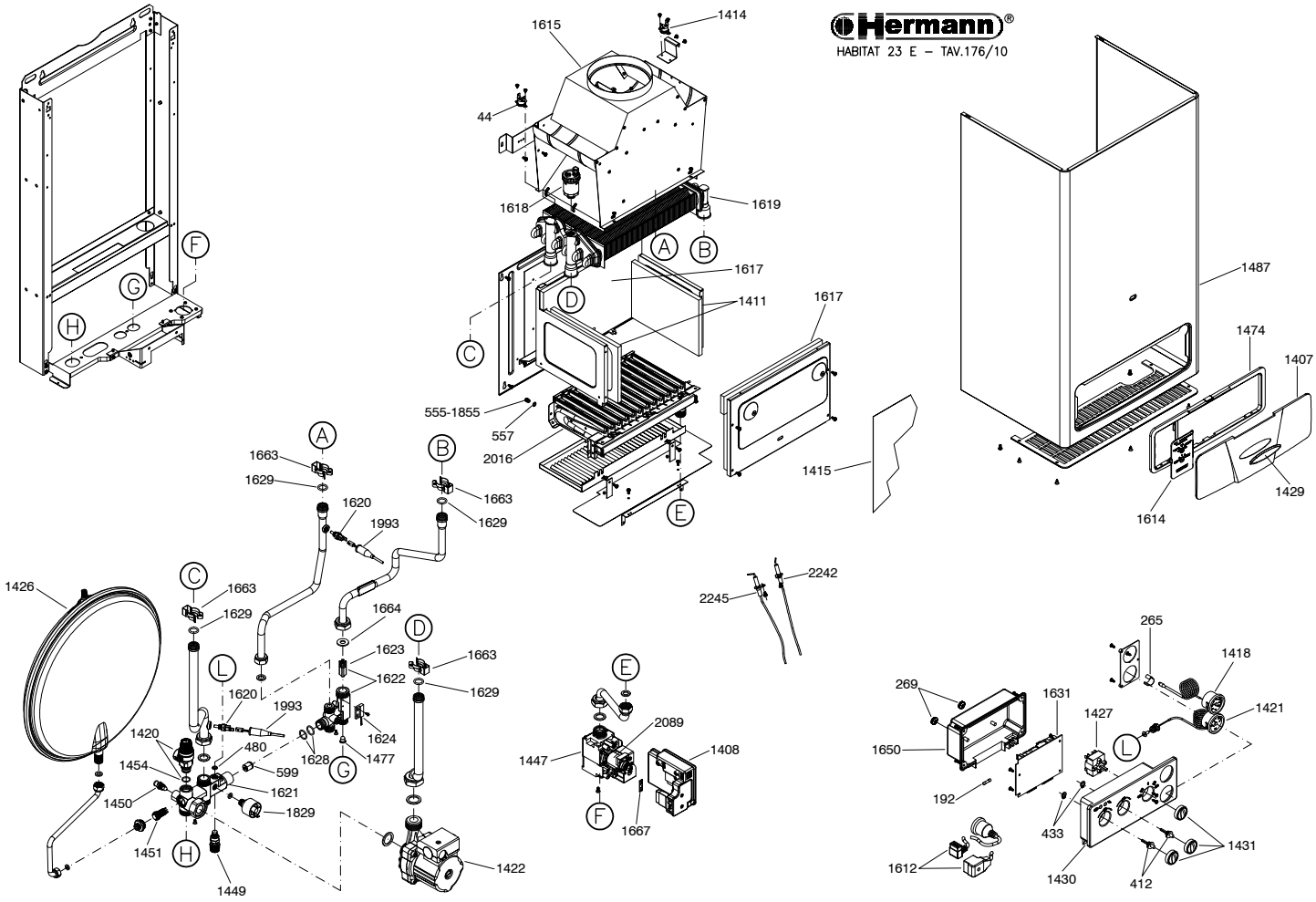
HABITAT 23 E – TAV.176/10