Библиотека СОК

GRAM BAKER 625

User manual

Hoshizaki Europe B.V.
Burgemeester Stramanweg 101
1101 AA Amsterdam, The Netherlands
Made in Denmark, CVR-No. 43 12 21 93

Contents

Intended use 4
Safety information 5
Location 6
Optimizing the energy consumption 7
General description 8
Refrigerant / GWP value 8
Climate / temperature class 9
Electrical connection 9
General use 11
Operating the product 13
Errors and alarms 14
User menu 16
Troubleshooting 20
Keylock 21
Defrosting 21
Defrost water 22
Door closing mechanism 23
Power failure 23
Cleaning 23
Door gaskets 24
Long term storage 24
Service 25
Disposal 26
Wiring diagram 27
Piping diagram 28

ENGLISH

Thank you for choosing a quality product from Gram Commercial.

This manual will advise you how to install, use and maintain your new product.

Before our products leave the factory, they undergo a full function and quality test.

Should you nevertheless experience problems with the product, then contact your local dealer. Gram Commercial representatives and dealers placed all over the world are ready to help you.

Please refer to your dealer for information about the warranty coverage of your new Gram product.

Any warranty is subject to correct use according to specifications in this user manual, where e.g. common maintenance and eventual repairs are carried out by authorized technicians with proper knowledge of the product and only using original spare parts.

Changes in installation and other use of the product than prescribed in this manual, might affect the operation and durability of the product.

The manual is written according to our current technical knowledge. We constantly work on updating this information, and we reserve the right to make technical changes.

Intended use

The product is intended for the storage of foodstuffs in non-household environments but not for the display to or access by customers.

The product is designed for usage at a constant temperature and not be used for chilling down or freezing hot/fresh foodstuff.

The product is only to be used for the purpose for which it has been expressly designed. Any other use could cause that the foodstuff stored in the product is not kept at the correct temperature or even damage the product.

The product is <u>not</u> suited for storing blood plasma, laboratory samples, pharmaceuticals or similar substances.

The manufacturer will not be held liable or responsible for any damage caused by improper, incorrect or unreasonable use of the product.

Safety information

Important

Description of symbols used in this manual.

Warning Lacking observation to these instrucions might result in accidents with personal injury.

Important If these instructions are not observed, the product might be damaged or destroyed.

Be aware that Gram Commercial has taken precautions to ensure that the safety of the product is in order.

Please read carefully the following information regarding safety.

It is important, that everyone who are to use or install the product, to have access to this manual.

This appliance is not intended for use by persons with reduced physical, sensory or mental capabilities, or lack of experience and knowledge, unless they have been given supervision or instruction concerning use of the appliance by a person responsible for their safety.

Children should be supervised to ensure that they do not play with the appliance.

The appliance might contain parts with sharp edges in the compressor compartment, and in the inside compartment.

The appliance is not to be transported on a sack truck, there is a danger of loosing the balance, causing danger to persons.

Do not pull the power cord to disconnect the appliance, or when moving the appliance.

Location

When receiving the product, check the packaging material for damage.

If any damage occurs at the packaging material, it should be considered if the product might have been damaged too. If the damage is substantial, please contact your dealer.

The transport pallet can be removed by loosening the screws that fasten the pallet to the product.

⚠ This task requires at least 2 persons. The heaviest part of the product is at the bottom. Be aware of this, when removing the transport pallet.

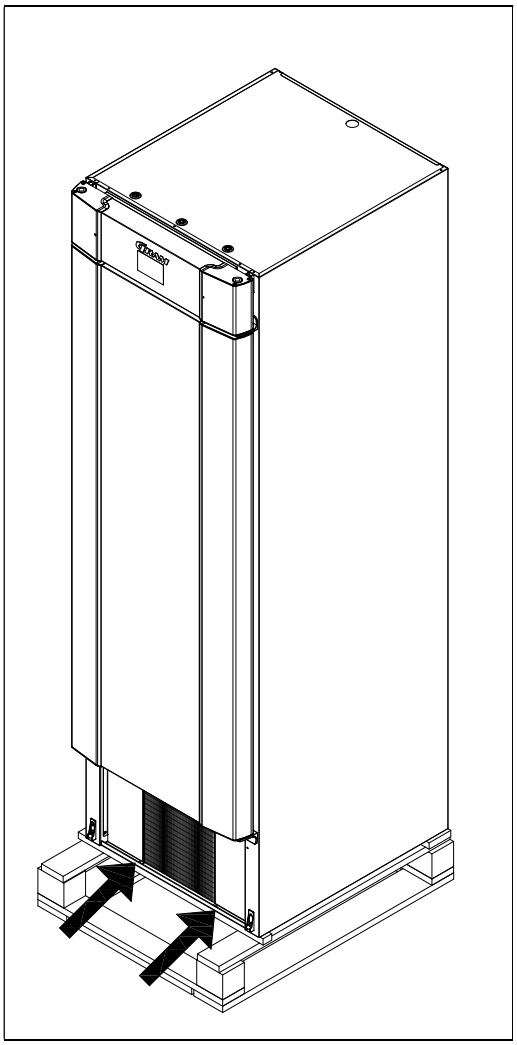

Fig.1

If the cabinet has been transported in horizontal position it must stand upright at least 2 hours before it is started to allow the oil from the compressor to run back.

Because of the heavy weight of the product, the floor might be damaged or scratched when moving the product.

Correct set up gives the most effective operation.
The product should be located in a dry and adequately ventilated room.

To ensure efficient operation, it may not be placed in direct sunlight or against heat-emitting surfaces. The product is designed to operate in an ambient temperature between +16°C and +40°C.

Avoid placement of the product in a chlorine/acid-containing environment (swimming bath etc.) due to risk of corrosion.

The product and parts of the interior is equipped with a protecting film, which should be removed before use.

Clean the product with a mild soap solution before use.

The set up place must be level and horizontal.

For versions with legs, use the adjustable legs to make sure that the product stands level and upright.

For versions with castors, the locking devices of the two front castors must be activated, when the product is in place. The base must be level, and the product may not be placed on frames or the like.

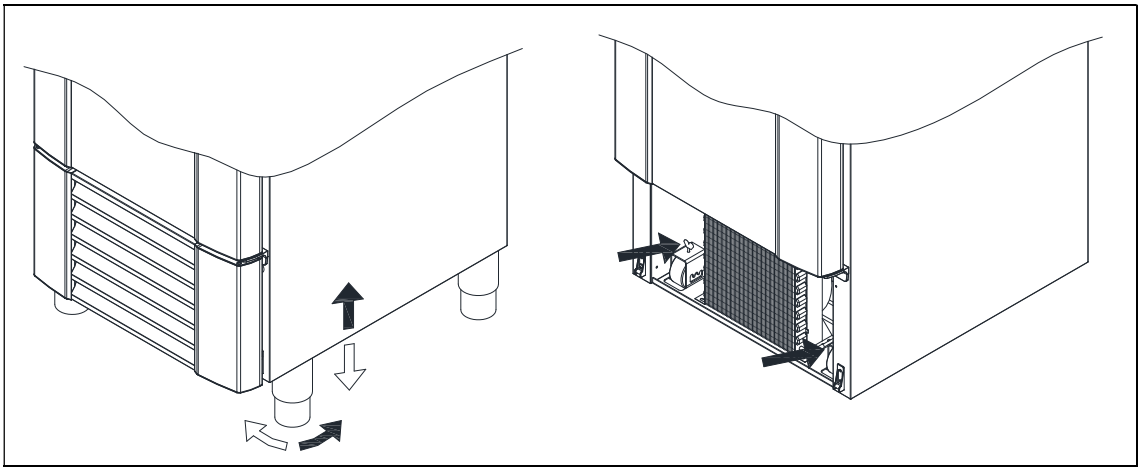

Fig. 2

Optimizing the energy consumption

- Correct set up gives the most effective operation.
- The product should be located in a dry and adequately ventilated room.
- To ensure efficient operation, it may not be placed in direct sunlight or against heat-emitting surfaces. The product is designed to operate in an ambient temperature between +16°C and +40°C.
- Do not keep the door open for too long.
- Keep the condenser filter clean – to be cleaned at least every 2 weeks.
- Do not set the temperature setpoint too low.

General description

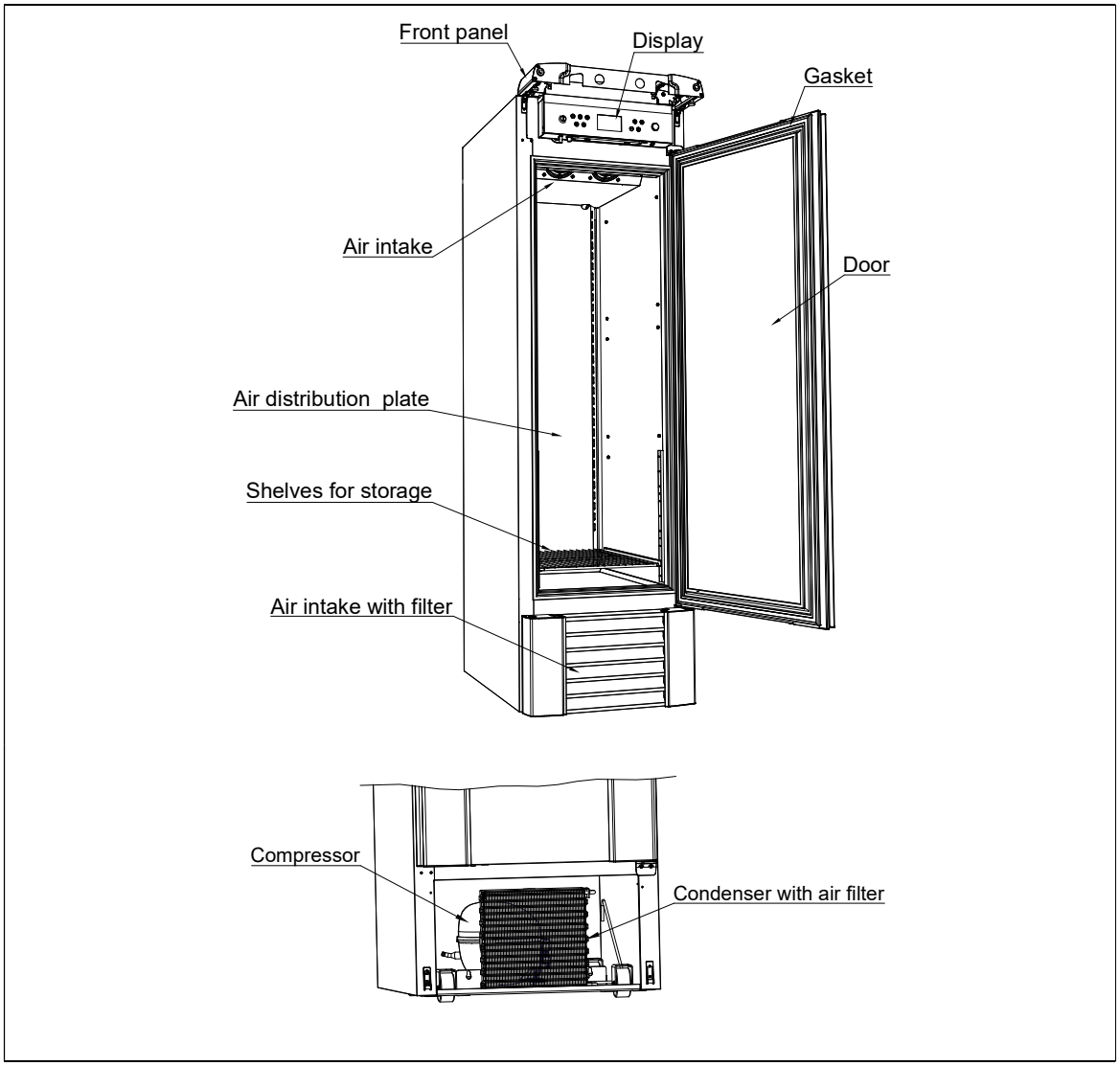

Fig. 3

Refrigerant / GWP value

Refrigerators	Refrigerant	Charge kg	GWP	CO_2 equivalent t
BAKER M 625 G	R290	0,113	3	0,000339
Freezers				
BAKER F 625 G	R290	0,100	3	0,000300

Climate / temperature class

Products are tested according to the following climate and temperature classes. Information about the product's climate and temperature class can be found at the name plate (see fig.7).

Climate class	
3	25°C / 60 % RH
4	30°C / 55 % RH
5	40°C / 40 % RH

Temperature class	
L1	-18°C
M1	+5°C

Electrical connection

Read the text below thoroughly before electrical connection.

The product is intended for connection to alternating current. The connection voltage (V) and frequency (Hz) are shown on the name plate in the cabinet (see Fig. 7). Only the supplied cord is to be used.

Never use an extension cord for this appliance!
If a wall socket is placed in a longer distance than the length of the supplied power cord, contact an electrician to establish a wall socket within the range of the supplied power cord.

If the product is defective, it must be examined by an authorized technician with proper knowledge of the product during the guarantee period, if it is a product with built-in compressor.
If it is a product connected to an external compressor unit, it must be examined by the company who has connected the product to the unit.
Outside the guarantee period, it is advisable to use the service advised by your dealer. If this is not the case, assistance is required from an authorized technician with proper knowledge of the product.

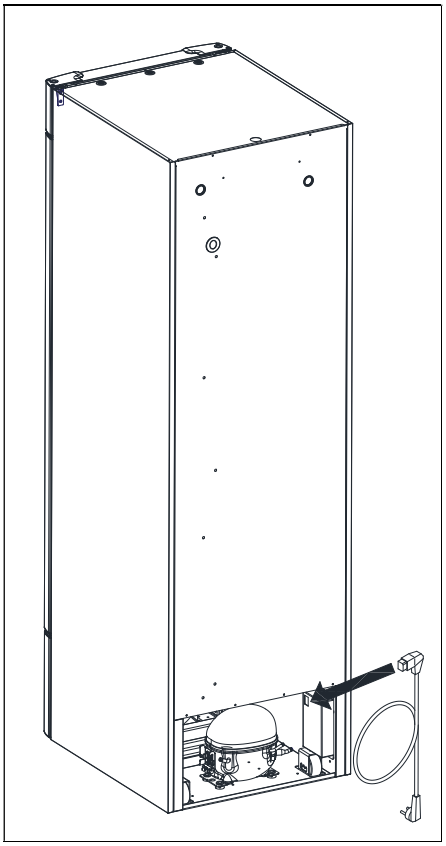

Fig. 4

Always disconnect the power if interruptions in power supply occur, and when electrical parts are removed/put on, and before cleaning and maintenance of the product.

Repairing of electrical/technical parts may only be performed by authorized technicians with proper knowledge of the product.

Do not use the product before all coverings are installed, so that live or rotating machine parts cannot be touched.

The product is not to be used outdoor.

All earthing requirements stipulated by the local electricity authorities must be observed. The plug and wall socket should then give correct earthing. If necessary, contact an electrician.

⚠ Make sure the product is switched off at the socket before service is performed on electrical parts. It is not sufficient to switch off the product by the START/STOP key as there will still be voltage to some electrical parts of the product.

General use

Do not block vent holes in the front panel.

Do not damage the refrigeration system parts.

During normal operation, some parts of the refrigeration system in the compressor compartment might reach high temperatures, and could therefore cause burns if touching these components.

Do not use electrical devices inside the product.

To ensure correct and efficient air flow in the cabinet, the marked areas must be kept free of items. (see Fig. 6)

All items to be stored, that are not wrapped or packed, must be covered in order to avoid unnecessary corrosion of the inner parts of the cabinet.

If any controller parameters are changed from default, this could cause that the product is not functioning normally, and harmful temperatures could damage items that are kept inside the product.

If the product is turned off, wait minimum 3 minutes before turning it on again. This is to protect the compressor from damage

Maximum loading of wire shelf: 40 kg

Do not store explosive substances such as aerosol cans with flammable propellant in this appliance.

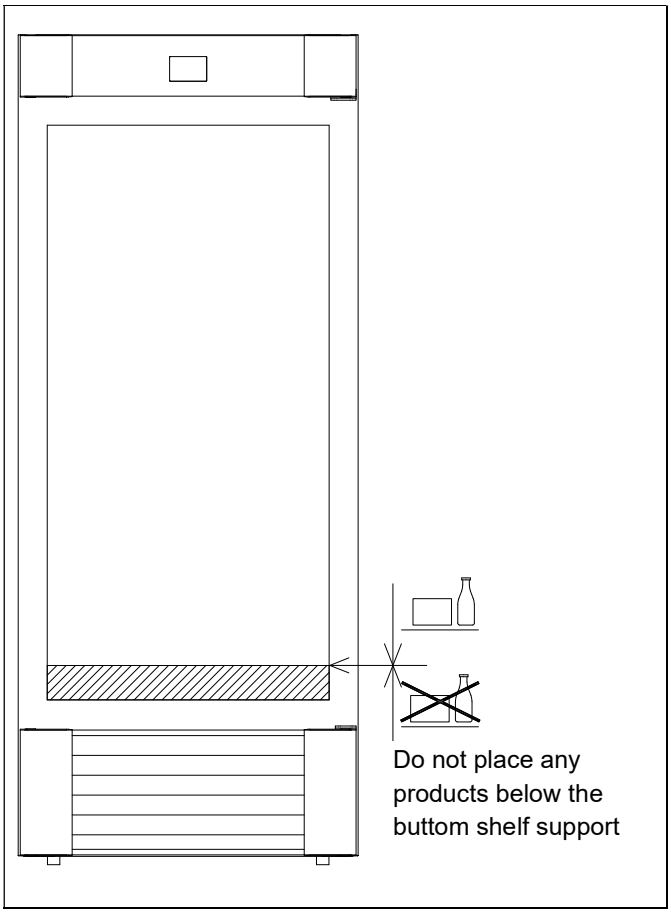

Fig. 6

Operating the product

Control elements:

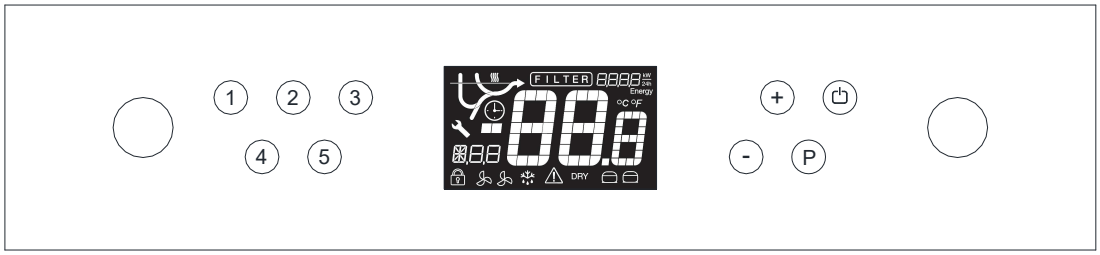

Primary display		Display of temperature
Secondary display		Display of error codes, alarms, settings etc.
Control lamps		These lamps indicate, which components/functions are active.
Warning lamps		These lamps only lights up if something is wrong, or action is required.
Control keys	⏻	On/off key. Used for turning the appliance on or off, and exiting the menu.
	P	P key. Used as selection key and for activation of a menu in combination with other keys.
	+ -	+/- keys. Up/down in setting.
	1 2 3 4 5	Numeric keys. Setting of parameters.

Starting up:

Plug in the appliance.

- Push ⏻ to turn on the appliance.

The display shows the software version, and relevant control lamps light up.

On cold cabinets, or if the cabinet has been turned off for a short time, and the evaporator temperature is still below the freezing point, a defrost will be activated. See the chapter “Defrosting”.

Temperature setting:

- Keep P pressed. When doing this, the setpoint temperature is displayed. While P is kept pressed, the setpoint can be changed by pressing + or -.
- Each time + or - is pressed the temperature will change one degree. The new value flashes in the display
- When the required setpoint has been set, let go of the keys, a short beep sounds, and the settings are saved.

Light:

When the door opens, the light is turned on in the product, and is turned off again when the door is closed.

Errors and alarms

Display code	Description
OP	The door is open.
A1 / OP ⚠	Door alarm, if the door remains open, or is not closed correctly.
A2 ⚠	Local high temperature alarm.
A4 ⚠	External high temperature alarm

Applicable to all alarms: press P to confirm the alarm. The display returns to normal operation.

Display code	Description
F1 ⚠	Room sensor error. Error display will continue until the error has been mended. Service assistance is required.
F2 ⚠	Evaporator sensor error. Error display will continue until the error has been mended. Service assistance is required.
F3* ⚠	Condenser sensor 1 error. Error display will continue until the error has been mended. Service assistance is required.
F4* ⚠	Condenser sensor 2 error. (only on products with 2 refrigeration circuits) Error display will continue until the error has been mended. Service assistance is required.
F7* FILTER ⚠	Too high condenser temperature. The code is displayed until the condenser temperature returns to normal. The cause might be a clogged condenser, or too high ambient temperature. If the ambient temperature is too high, the placement of the cabinet might be wrong, and an alternative place should be found. Ventilation might help. If this does not help, request service assistance.

* Applies only to cabinets with built-in compressor.

Reminder of cleaning the condenser air filter:

After 600 compressor running hours the filter must be cleaned and it is indicated by warning lights: FILTER 🔧 ⚠.
If the cleaning is not completed within 650 hours, the warnings continue, and an acoustic alarm sounds.

Resetting the FILTER alarm:

After cleaning the air filter, the controller must be reset to remove the alarms.
It can only be reset by using a certain key combination.

- Push ⏻ three times followed by pushing P three times. FILTER alarm will disappear after 1 minute.

User menu

User menu overview:

Menu access P + 1 ⇥	↴	⇥	+ / -	Description
1. Dry refrigeration	DC	ON/OFF		Activation of dry refrigeration. (on/off)
2. Rapid thaw	UF	ON/OFF		Activation of rapid thaw. (on/off)
3. Local alarm setting	LAL	LHL	°C	Setting the upper alarm limit. At alarm, the display shows: **A2**
		LHd	min.	Time delay for the upper alarm limit.
		DA	On/off	Activation of local door alarm. At alarm, the display shows: **A1** (1=on / 0=off)
		DAd	min.	Time delay for the door alarm.
		BU	On/off	Activation of buzzer. The buzzer sounds at alarms A1, A2. (1=on / 0=off)
4. External alarm setting	EAL	EHL	°C	Setting the upper alarm limit. At alarm, the display shows: **A3**
		ELL	°C	Setting the lower alarm limit. At alarm, the display shows: **A4**
		EHd	min.	Time delay for upper alarm.
		ELd	min.	Time delay for lower alarm.
5. Temperature offset (sensor calibration)	CAL	CA	K	-5…+5 K
6. Alarm limits	ALL	FAS/ESC		Setting of alarm limits. Fixed/escorting. **FAS**= fixed limits / **ESC** = limits following the setpoint
7. No. of defrosts	DEF	4		Number of defrosts in 24 hours.

Note: The numbers at each menu item refer to the numbers in the descriptions on the following pages.

If a change of the setting is required, get access to the menu by pushing P + 1 for more than 3 seconds. The values are changed by pushing the + or - keys. The new setting is saved by pushing P. To exit the menu, push ⏻.

1. Setting of dry refrigeration

Note : Applies only to products equipped with dry refrigeration.

- Press P + 1 for more than 3 seconds. The secondary display shows **DC**.
- Press P, the secondary display shows **OFF**, because the program is off.
- Press +, **ON** flashes in the display.
- Press P to confirm, **ON** lights constantly, and the control lamp **DRY** lights.
- Press ⏻ twice to exit the user menu. Dry refrigeration is now active.
- De-activation of dry refrigeration is done in the same way.

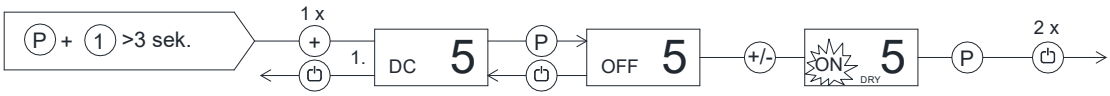

2. Setting of rapid thaw

Note: Applies only to products equipped with rapid thaw. The temperature setpoint must be set between +2°C and +8°C in order to activate rapid thaw.

- Press P + 1 for more than 3 seconds.
- Press + . The secondary display shows **UF**.
- Press P, the secondary display shows **OFF**, because the program is off.
- Press +, **ON** flashes in the display.
- Press P to confirm, **ON** lights constantly, and the control lamp lights.

  At the same time the thaw symbol is displayed:
- Press ⏻ twice to exit the user menu. Rapid thaw is now active. The control lamp flashes, simultaneously the color of the arrow runs from the bottom to the top.
- When the rapid thaw ends, and are turned off and the controller returns to normal operation.

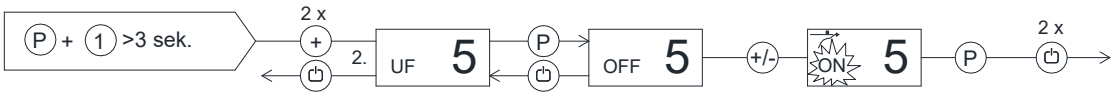

3. Local alarm setting

- Press P + 1 for more than 3 seconds.
- Press +, until the secondary display shows **LAL**.
- Press P, select menu option **LHL**, **LHd**, **DA**, **DAd** or **BU** with the + key.
- Press P to confirm.
- Change the value by using the + or - key.
- Press P to confirm.
- Press ⏻ 3 times to exit the user menu.

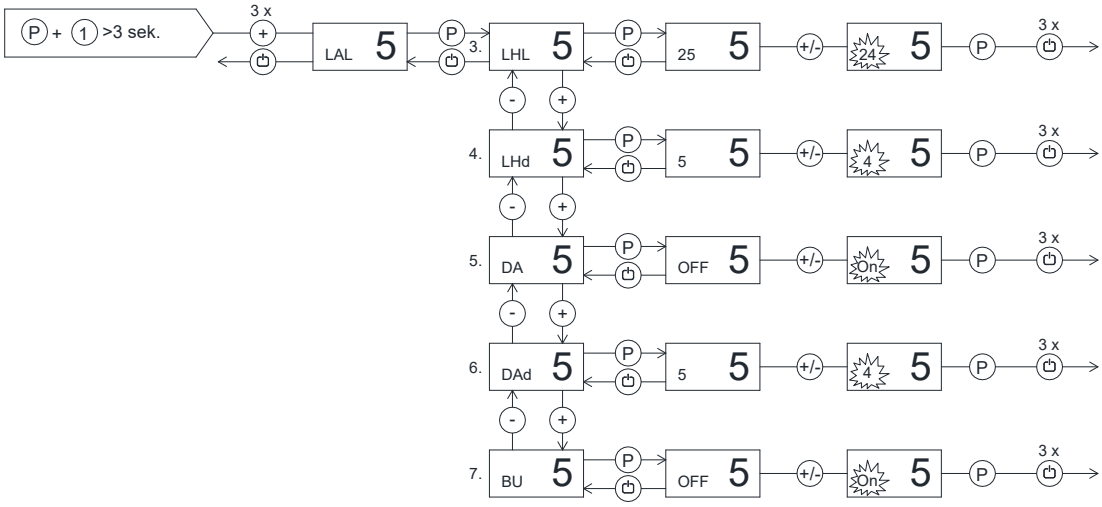

4. Local alarm setting

- Press P + 1 for more than 3 seconds.
- Press +, until the secondary display shows **EAL**.
- Press P, select menu option **EHL**, **ELL**, **EHd**, or **ELd** with the + key.
- Press P to confirm.
- Change the value by using the + or - key.
- Press P to confirm.
- Press ⏻ 3 times to exit the user menu.

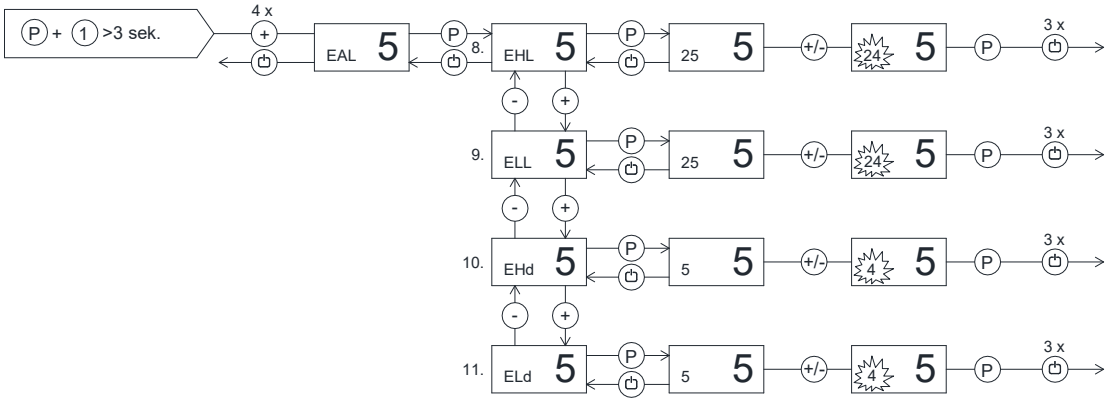

5. Temperature offset

- Press P + 1 for more than 3 seconds.
- Press +, until the secondary display shows **CAL**.
- Press P, the secondary display shows **CA**.
- Change the value by using the + or - key.
- Press P to confirm.
- Press ⏻ 3 times to exit the user menu.

6. Alarm limits

- Press P + 1 for more than 3 seconds.
- Press +, until the secondary display shows **ALL**.
- Press P, the secondary display shows **FAS**.
- Change the value by using the + or - key.
- Press P to confirm.
- Press ⏻ twice to exit the user menu.

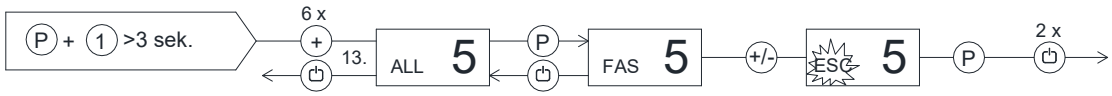

7. Number of defrosts

- Press P + 1 for more than 3 seconds.
- Press +, until the secondary display shows **DEF**.
- Press P, the secondary display shows the current no. of defrosts (4 is default).
- Change the value by using the + or - key.
- Press P to confirm.
- Press ⏻ twice to exit the user menu.

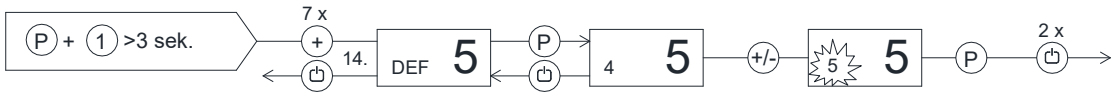

Troubleshooting

Noise:

- If abnormal noise occurs, request service assistance.
- Operating sounds from compressor, condenser fan and interior fan are normal. Some models are equipped with a drain pump.
- If sheet metal parts, front panels or panels in front of the compressor compartment are making noise, these might be open. Close the panels.

Frosting inside compartment:

- Ambient humidity too high.
- The door is opened too often.
- The door is left open for too long.
- Damaged door gasket. Check it thoroughly for damages.

Poor cooling performance:

- Ambient temperature too high.
- The door is opened too often and/or open for too long.
- The door is left open.
- Damaged door gasket.
- Temperature setting too high.
- Product too packed with foods - air inlet/outlet blocked.
- Condenser air filter is clogged.
- Warm or hot foods inside the product.
- Defrost in progress. The cabinet temperature may rise temporarily during the defrost cycle, but it will not affect the foods inside. The defrost symbol is displayed.

Some of the foods are frozen:

- Product too packed with foods - air inlet/outlet blocked.
- Temperature setpoint too low.
- Evaporator fan might be defective.

Condensation around the door:

- Ambient humidity too high.
- The door is not closed tightly.
- Damaged door gasket.

Draining water or ice formation inside the back wall / bottom:

- Check that the drain is not stopped.
- Check and clean the water trap in the re-evaporation tray.

Too high energy consumption:

- Ambient temperature too high.
- The door is opened too often and/or open for too long.
- The door is left open.
- Damaged door gasket.
- Temperature setpoint too low.
- Product is too packed with foods - air inlet/outlet blocked.
- Condenser air filter is clogged.
- Warm or hot foods are brought into the product.
- Product is placed in direct sunlight or close to heat-emitting surfaces.
- The default settings have been changed.

Keylock

The keypad can be locked by simultaneously pushing ⏻ + 1 for more than 5 seconds.
🔒 lights to indicate that the keys are locked, and a short beep sounds. Now it is not possible to use the keys for temperature setting etc.
The same code is to be used for unlocking the keypad again.

Defrosting

Defrosting is automatically performed 4 times every 24 hours. If the product is operating under severe load (frequent door opening and frequent replenishment), manual defrosting can become necessary.

Starting manual defrosting: push P + ⏻ simultaneously for more than 3 seconds.

Refrigerator: Control lamps for fan and defrosting are alight.

Extended refrigerator: Control lamp for defrosting is alight, and lamp for fan is alight depending on temperature setpoint.

Freezer: Control lamp for defrosting is alight.

Shortly after the defrosting period has ended, the compressor starts and the compressor symbol is alight.

It is possible to change the number of defrosts. Find further information on: www.gram-commercial.com

⚠ Do not use sharp or pointed objects to accelerate the defrosting process.

Defrost water

Defrost water is led through a tube in the insulation, to a tray in the compressor compartment.

A re-evaporation pipe from the refrigeration system, placed in the tray, evaporates the defrost water.

It is recommended to clean the tray and corresponding parts at least once a year.
Remember to disconnect the cabinet before cleaning.
Be careful not to damage piping parts and heating element during cleaning.

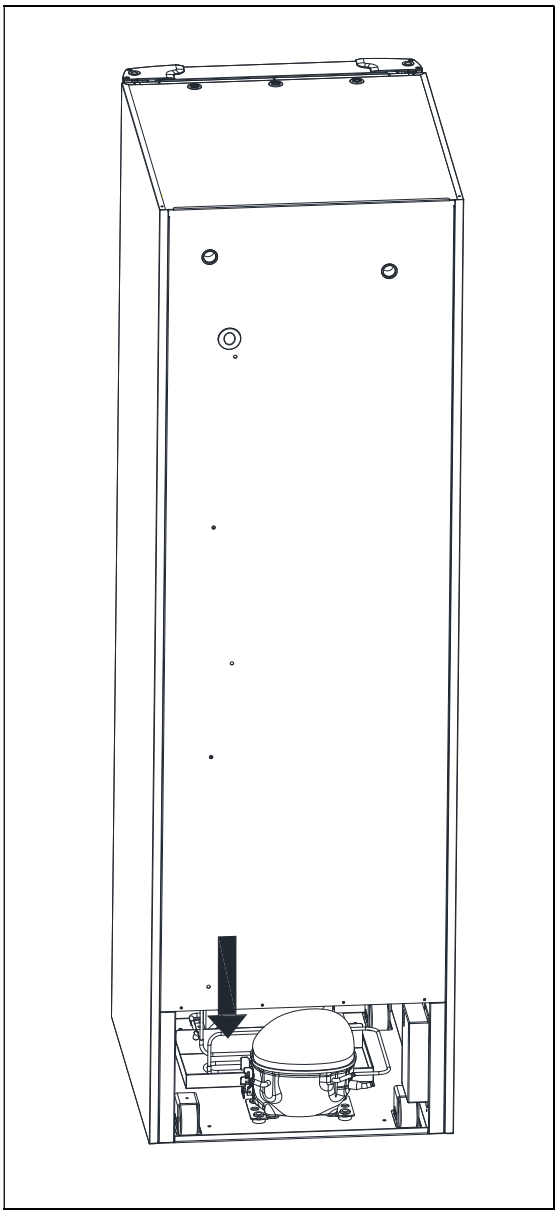

Fig. 6

Door closing mechanism

The door is equipped with a self-closing system. If the door is opened less than 90°, it will close by itself. If the door is opened more than 90°, it will stay open.

Power failure

In the event of a power failure, the control remembers the temperature setting and restarts the product when power is restored. If the power failure persists for some time, the control might revert to the factory setting.

Cleaning

Insufficient cleaning will cause that the product will not work at optimum perfomance, or eventually it will be defective.

Before cleaning, the product should always be disconnected.

Do not flush the product with water, do not use water jet or steam hose as this may cause short-circuits in the electrical system.

Cleansing agents containing chlorine or compounds of chlorine as well as other corrosive means, **are not to be used**, as they might cause corrosion to the stainless panels of the cabinet and the evaporator.

The compressor compartment and in particular the condenser must be kept free from dust and dirt. This is best done with a vacuum cleaner and a brush.

The air filters on the condenser and the front panel can be removed and cleaned in a dishwasher at max. 50°C.

For the external maintenance – use stainless steel polish.

The product should be cleaned internally with a mild soap solution at suitable intervals and checked thoroughly before it is put into operation again.

Door gaskets

This chapter deals with the importance of a well-functioning door gasket.

Gaskets are an important part of a refrigerator/freezer. Gaskets with reduced functionality, reduces the tightness of the cabinet. Reduced tightness might cause increased humidity, internal icing, an iced up evaporator (leading to reduced refrigeration capacity), and in worst case reduced lifecycle of the cabinet.

Therefore it is important to be aware of the condition of the gasket. Regular inspection is recommended.

The gasket should be cleaned regularly with a mild soap solution.

If a gasket needs replacement, contact your supplier.

Long term storage

If the product is taken out of operation, and need to be prepared for long-term storage, clean the inside compartment, the door and door gasket thoroughly with a hot soapy damp cloth.

Eventual remnants of food could create mold.

Service

The refrigerating system and the hermetically sealed compressor require no maintenance - they merely must be kept clean.

If refrigeration fails, first investigate whether the unit has been unintentionally disconnected or switched off at the socket, or whether a fuse has blown.

If it is not possible to find the cause of the refrigeration failure, please contact your dealer.

When reporting a malfunction please state the type and serial number (S/N) of the cabinet. This information is found on the name plate, see Fig. 7.

Location of the name plate:

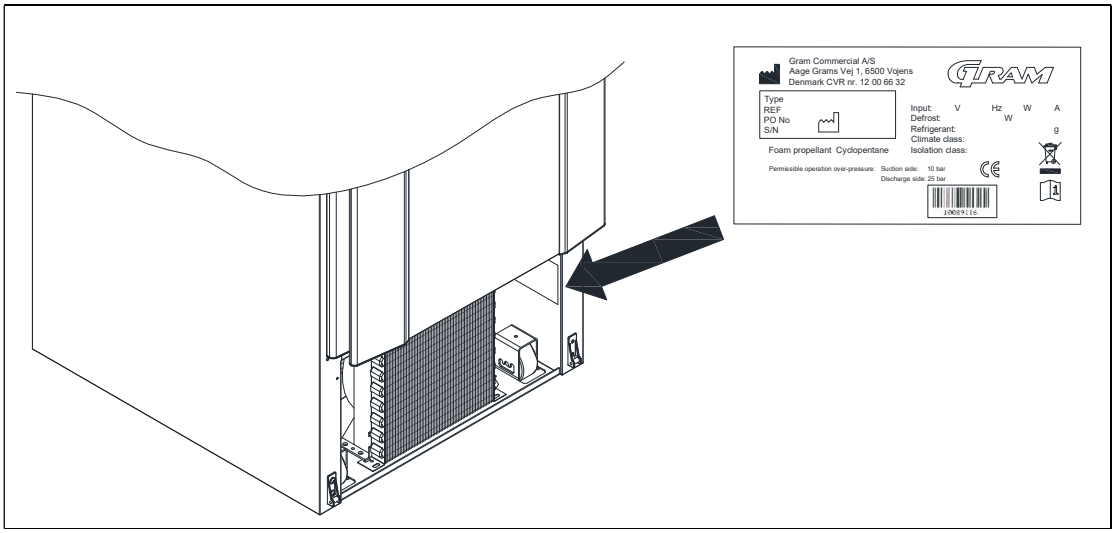

Fig.7

Disposal

Electrical and electronic equipment (EEE) contains materials, components and substances that can be dangerous and harmful to human health and the environment if the waste (WEEE) is not disposed of properly.

Products that are labelled with a “crossed-out wheelie bin” is considered electric and electronic equipment. The crossed-out wheelie bin symbolizes that waste of this type cannot be disposed of with unsorted municipal waste but must be collected separately.

Contact your local dealer when the product needs to be disposed of.

Please be aware of not damaging the refrigeration system and piping when a product is taken out of use. This will prevent the uncontrolled escape of the refrigerant from the refrigeration system.

The below only concerns the United Kingdom.

Disposal of an old cabinet is only available when we are delivering a new one at the same time. Cabinets must be fully defrosted and emptied prior to collection.

Hoshizaki recognises that our products for the catering market are considered as WEEE when they become obsolete. To ensure that Hoshizaki’s responsibilities are handled correctly and environmentally friendly, we are signed up the largest Business to Business compliance scheme in the UK – B2B Compliance http://www.b2bcompliance.org.uk

B2B Compliance will on our behalf deal with all areas of our responsibilities when collecting and disposing of equipment which fall under the UK WEEE regulations. B2B Compliance can be contacted on telephone number 01691 676124.

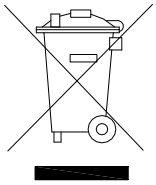

Wiring diagram

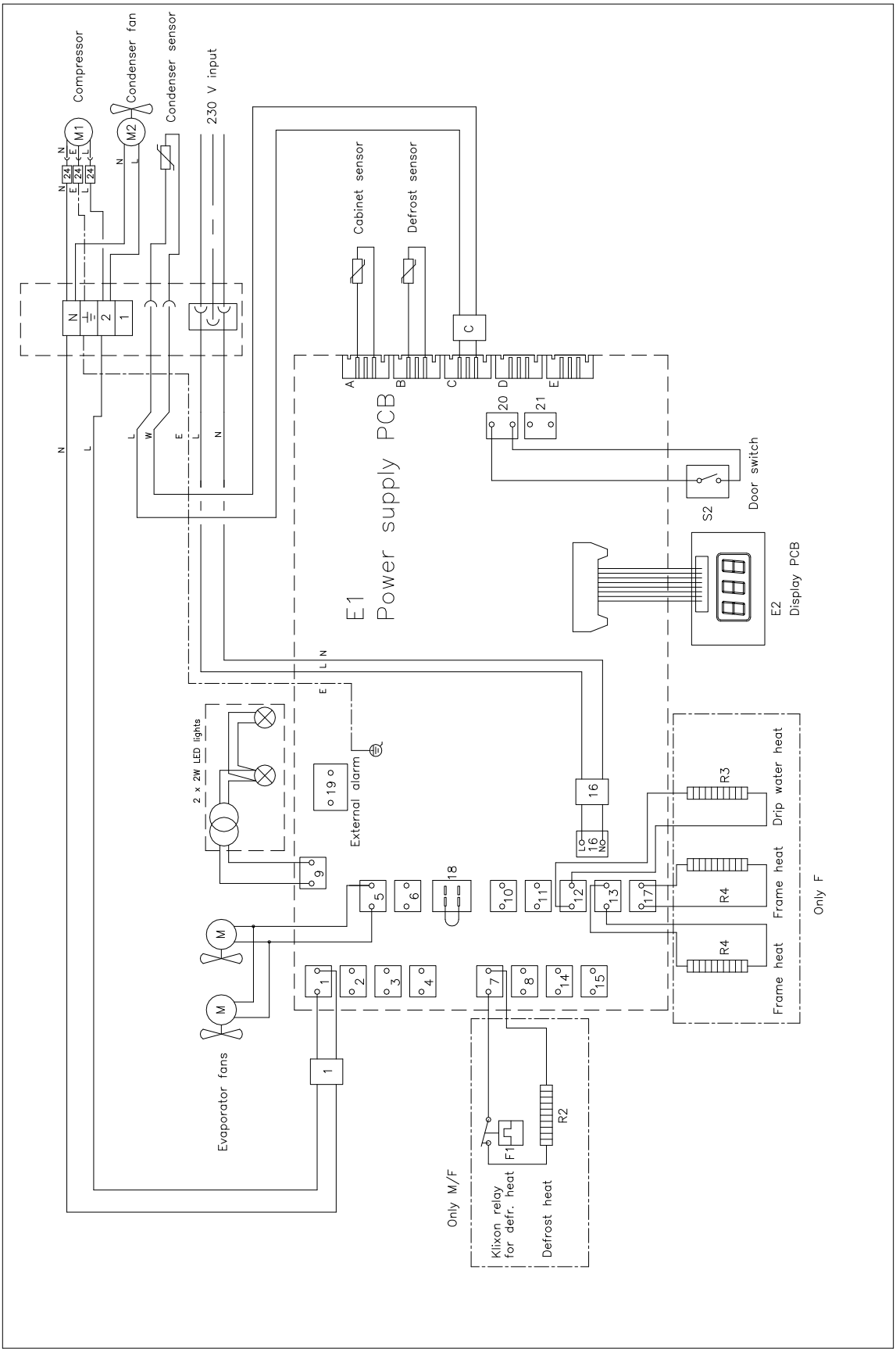

Piping diagram

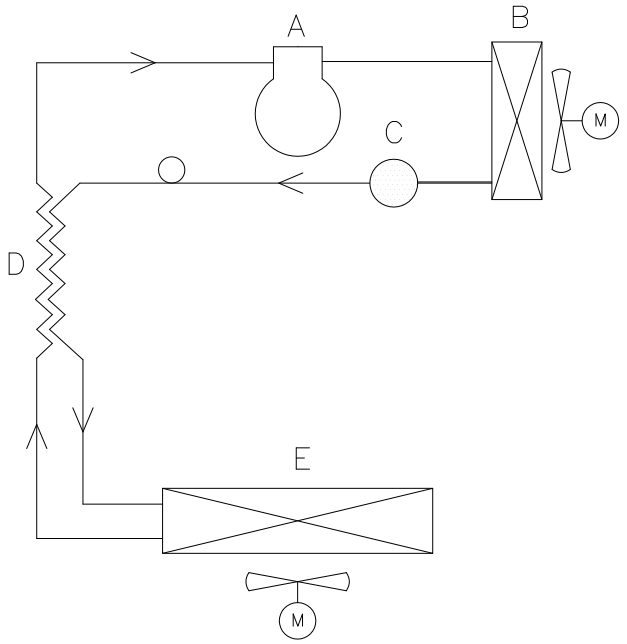

	DK	GB	D
A	Kompressor	Compressor	Kompressor
B	Kondensator	Condenser	Verflüssiger
C	Tørrefilter	Filter drier	Trockenfilter
D	Varmeudveksler	Heat exchanger	Wärmeaustauscher
E	Fordamper	Evaporator	Verdampfer