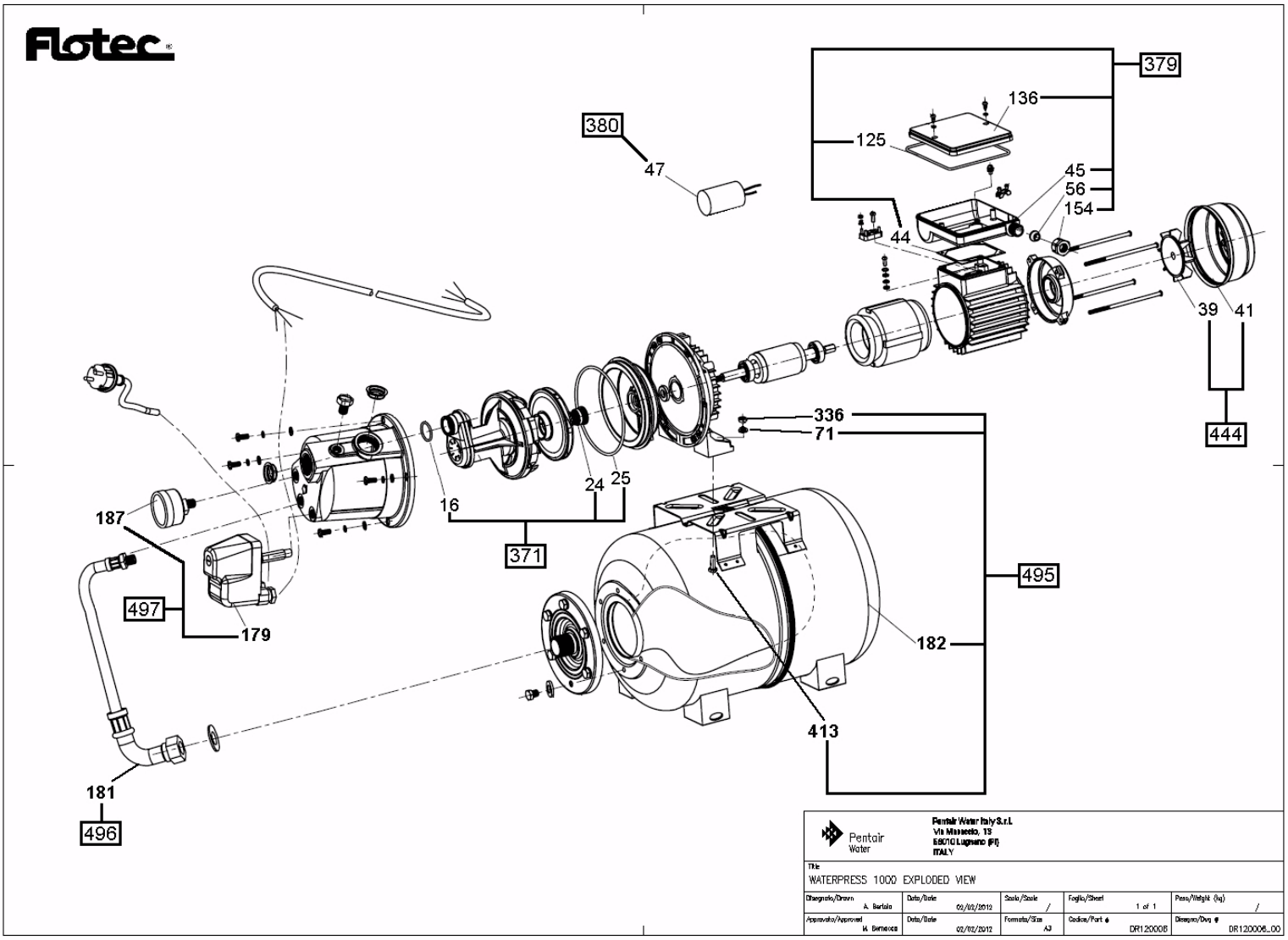
Flotec
379
136
125
380
47
45
56
154
44
39
41
444
336
71
24
25
16
371
187
497
179
495
182
413
181
496
Pentair Water
Pentair Water Italy S.r.l.
Via Monsecco, 13
55010 Lugnano (PI)
ITALY
Title
WATERPRESS 1000 EXPLODED VIEW
Disegnato/Drawn A. Bertolo
Data/Date 02/02/2012
Scala/Scale /
Foglio/Sheet 1 of 1
Peso/Weight (kg) /
Approvato/Approved M. Bernacca
Data/Date 02/02/2012
Formato/Size A3
Codice/Part # DR120006
Disegno/Dwg # DR120006_00