Библиотека СОК

EMICON
AIR CONDITIONING AND INDUSTRIAL APPLICATION

CE

USE AND MAINTENANCE MANUAL

PRECISION AIR CONDITIONING UNITS WITH DIRECT EXPANSION FOR TELECOM APPLICATION

ED.P-A SF (Free-cooling System)

TABLE OF CONTENTS

1 INTRODUCTION Pag. 2
1.1 Manual content Pag. 2
1.2 Safety marks Pag. 2
1.3 Referring standards Pag. 2
1.4 Warranty Pag. 3
1.5 Readers of the Manual Pag. 3

2 MAIN SAFETY RULES Pag. 3
2.1 Main warnings Pag. 3
2.2 Allowed use Pag. 3
2.3 Forbidden use Pag. 3
2.4 Dangerous areas Pag. 4

3 GENERAL DESCRIPTION Pag. 4
3.1 Unit description Pag. 4
3.2 Main components Pag. 9
3.2.1 Cooling circuits Pag. 10
3.3 Specification Pag. 13
3.4 Dimensional drawings Pag. 13
3.5 Accessories Pag. 13

4 INSTALLATION Pag. 14
4.1 Identification tag Pag. 14
4.2 Reception and inspection Pag. 14
4.3 Handling Pag. 15
4.4 Arrangements and placing Pag. 16
4.5 Cooling connections (ED.A,) Pag. 20
4.6 Condensate drain connection Pag. 21
4.7 Air connections Pag. 21
4.7.1 Mounting Pag. 21
4.7.2 Duct minimum dimensions Pag. 21
4.8 Electric connections Pag. 22
4.8.1 Power supply connection Pag. 23
4.8.2 Cconnection to the user terminal board Pag. 23
4.8.3 Warning in case of connection to the terminal board when optional "TE" is installed Pag. 24
4.8.4 Condenser connections (ED.A) Pag. 24
4.9 System vacuum and charge execution (ED.A,) Pag. 24
4.9.1 General warnings Pag. 24
4.9.2 Vacuum execution Pag. 25
4.9.3 Refrigerant charge execution Pag. 26

5 OPERATION Pag. 28
5.1 First startup Pag. 28
5.1.1 Cooling circuit (ED.A,) Pag. 28
5.1.2 Startup Pag. 28
5.1.3 Setup Pag. 29
5.1.4 Microprocessor setting Pag. 30
5.1.5 Steam production setting (unit with humidifier) Pag. 30
5.2 Troubleshooting Pag. 30
5.3 Common troubles Pag. 31
5.4 Routine maintenance Pag. 33

6 DISMANTLING Pag. 33

AIR CONDENSER Pag. 34

STEAM HUMIDIFIER Pag. 41
ATTACHMENTS

The manufacturer reserves the right to modify this manual without any prior notice

1 - INTRODUCTION

1.1 Manual content

The present handbook, originally written in Italian, was completed in compliance with the "Machinery Directive". It contains all the necessary information for carrying out without any risk transportation, installation, startup, operation, setting, maintenance and dismantling of the air conditioning unit of ED Millennium series.
Should you have any doubt on the correct understanding of these instructions, please contact the Manufacturer in order to get further explanations.

1.2 Safety marks

The following safety marks are used in this manual to draw attention to all useful information in order to avoid any dangerous situation which could be unsafe and harmful for people, could damage equipment and environment besides breaking the unit.

It means operation and behaviour not allowed.

It means danger or risk to people, things or environment.

It means an electrical danger.

It means a warning about important functions or useful information. Pay the maximum attention to the paragraphs marked with this symbol.

1.3 Referring standards

The units of the 'ED' series are designed and manufactured in compliance with the relevant European Directives and in particular, they meet the "Essential Safety Requirements" as set out in the European Directive 89/392/CEE, and further amendments, as attested by the CE mark that is on each unit.
As a matter of fact, the units are certified by the manufacturer and are provided together with the CE Declaration of Conformity which is attached to the present manual.
Where applicable, the units mentioned in this handbook are in conformity with the directive 97/23/CE (PED), concerning the pressure devices.

1.4 Warranty

The manufacturer warrants the Air Conditioning Units according to what stated on his general sales terms or according to what else explicitly agreed.
The Manufacturer Warranty is void in case the guidance of this manual has not been carefully respected.
The manufacturer refuses all responsibility for any damage to people, animals, things or environment, caused by incorrect installation, maintenance or setting or misuse of the machine. It is considered as "misuse" of the machine any use not explicitly allowed in this manual.

Warning: on the first startup, duly fill in the relevant report attached to this manual and send a copy to Emicon A.C. (Customer Service), in order to make the warranty valid.

1.5 Readers of the Manual

This manual and all its attachments are supplied with the described unit. The manual must be kept by the machine's owner in a proper place. To this end, a plastic bag where to store the manual has been placed inside the machine so that it can be always easily accessible for consultation and at the same time, it can be preserved in a good state.
In case the manual is lost or deteriorated, a new copy must be requested directly to the manufacturer.

2 - MAIN SAFETY RULES

2.1 General warnings

Read carefully the whole handbook before performing any operation on the unit. Only qualified and trained technicians must perform any operation on the machine.

Do not touch the machine if with bare feet or with humid or wet parts of the body.
Do not perform any cleaning operation before the main switch is "OFF" and power line disconnected.
Do not spread, leave unattended or to the reach of children any packaging material (carton box, staples, plastic bags, etc.) as they may be a source of danger.

2.2 Allowed use

The machine has been designed and produced for air conditioning of technology centres and therefore it must be used only for this purpose, according to its performing features. All different uses are not allowed and disclaim all manufacturer's responsibility for damages caused to environment, people, animals and properties.

2.3 Forbidden use

Do not use the machine:

- for other use than that described in paragraph 2.2;
- when it is exposed to rainfall;
- in atmosphere with high risk of fire or explosion;
- in spaces with corrosive atmosphere.

Any operation on the unit must be carried out in compliance with local technical standards.

2.4 Dangerous areas

The machine is closed by case panels, at the exception of the upper part on some models. The dangerous parts inside the unit are not accessible from outside.

Only qualified and trained personnel is allowed to remove the covering panels because inside the unit there are parts with high risk of electric shock, areas with high temperature and working mechanical components.

If the machine is supplied with the cooling circuit already charged with pressure gas, it is necessary to pay the maximum attention in order to avoid accidental release of the gas in the atmosphere.

3 - GENERAL DESCRIPTION

3.1 Unit description

The precision air conditioning units with direct expansion coil of the ED series have been designed for being used in technology centres, computer processing centres, telecom applications and whenever special thermic and humidity conditions are required.
The machines have been conceived for operating with ecological gas R407C (K version), R134A (Ka version), R410A (Kc version) and with refrigerant R22 (without any indication of the kind of gas).
The machines are suitable only for internal installation.
All units are electrically tested at the factory.
The units are supplied with nitrogen pressure cooling circuit for the split version ED.A , while they are supplied with refrigerant charge for the version ED.P ; both have anti-freezing oil in the compressor.

The available versions are:

ED...A SF	Free-cooling indoor unit to be connected to a remote condenser;
ED...P SF	Free-cooling monobloc unit with air condenser on board;

The machines are available in different configurations according to the air intake and discharge:

U:	Air intake from the back and upflow air discharge;
D:	Air intake from the back and downflow air discharge.
E:	Air intake from the back and downflow horizontal displacement air diffusion;

The different unit models of the ED-SF series are marked with initials, whose interpreting key is shown in the scheme on page 5.

Interpreting key for the initials used to mark the air conditioning units of the ED series

UNIT TYPE: Direct expansion

TYPE OF CONDENSATION: A = air with remote condensation
P = air with in-built condensation

UNIT COOLING CAPACITY

NUMBER OF INDEPENDENT COOLING CIRCUITS

FREE-COOLING SYSTEM

AIR DIFFUSION: U= upflow
D = downflow
E = displacement

SOUND LEVEL: Nothing = standard
S = Silenced

REFRIGERANT GAS: K = R 407C
Ka = R 134A
Kc = R 410A
Nothing = R22

ED A 5 1 SF E S K

As shown in the scheme in the previous page, the air conditioning units are classified according to the transfer path of the air inside the conditioning machine before being discharged into the working room at the desired temperature. The following pictures show the four possible different configurations, according to the air distribution system.

Version ED.P SF E K

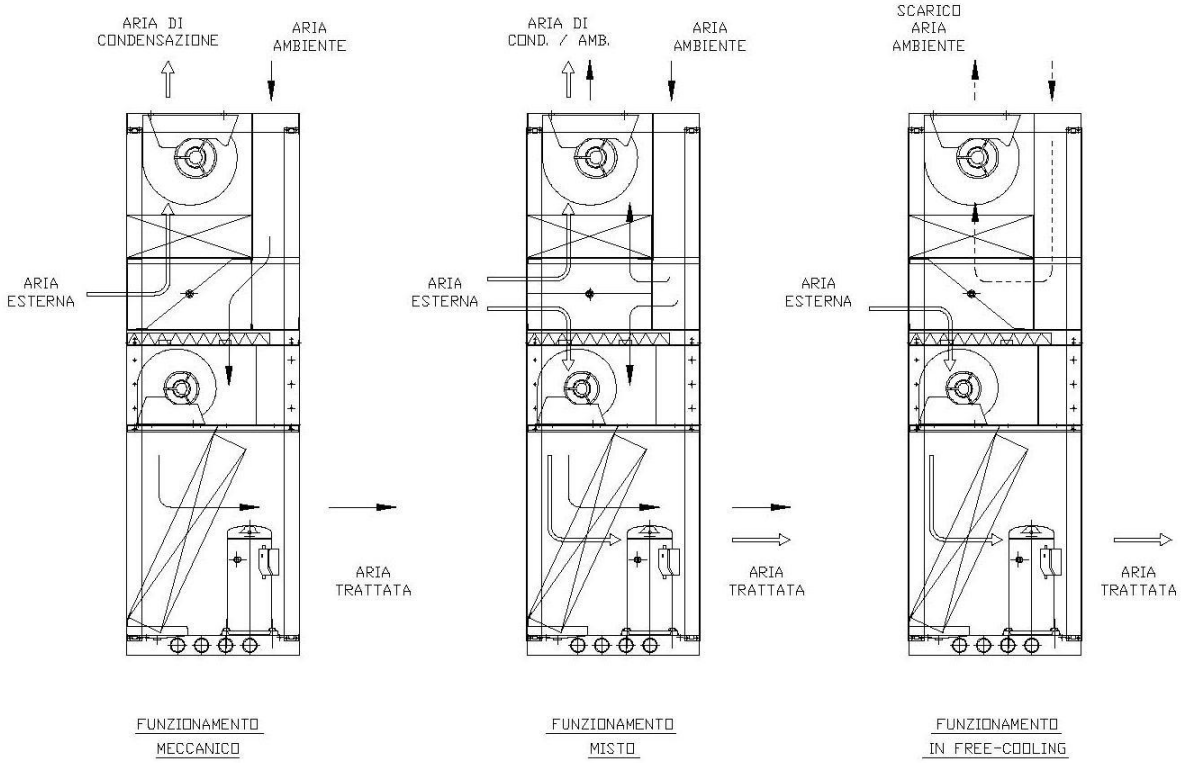

Version ED.P SF D K

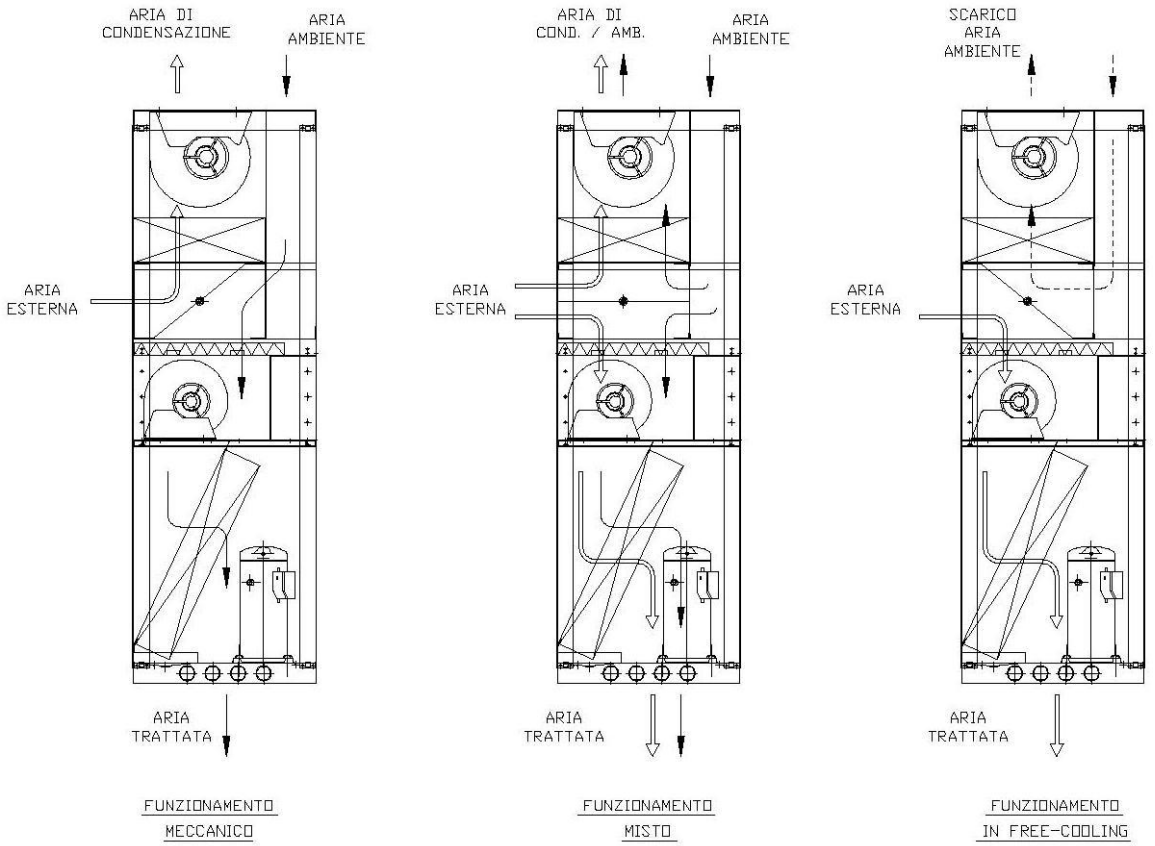

EMICON AIR CONDITIONING AND INDUSTRIAL APPLICATION

Version ED.P SF D K

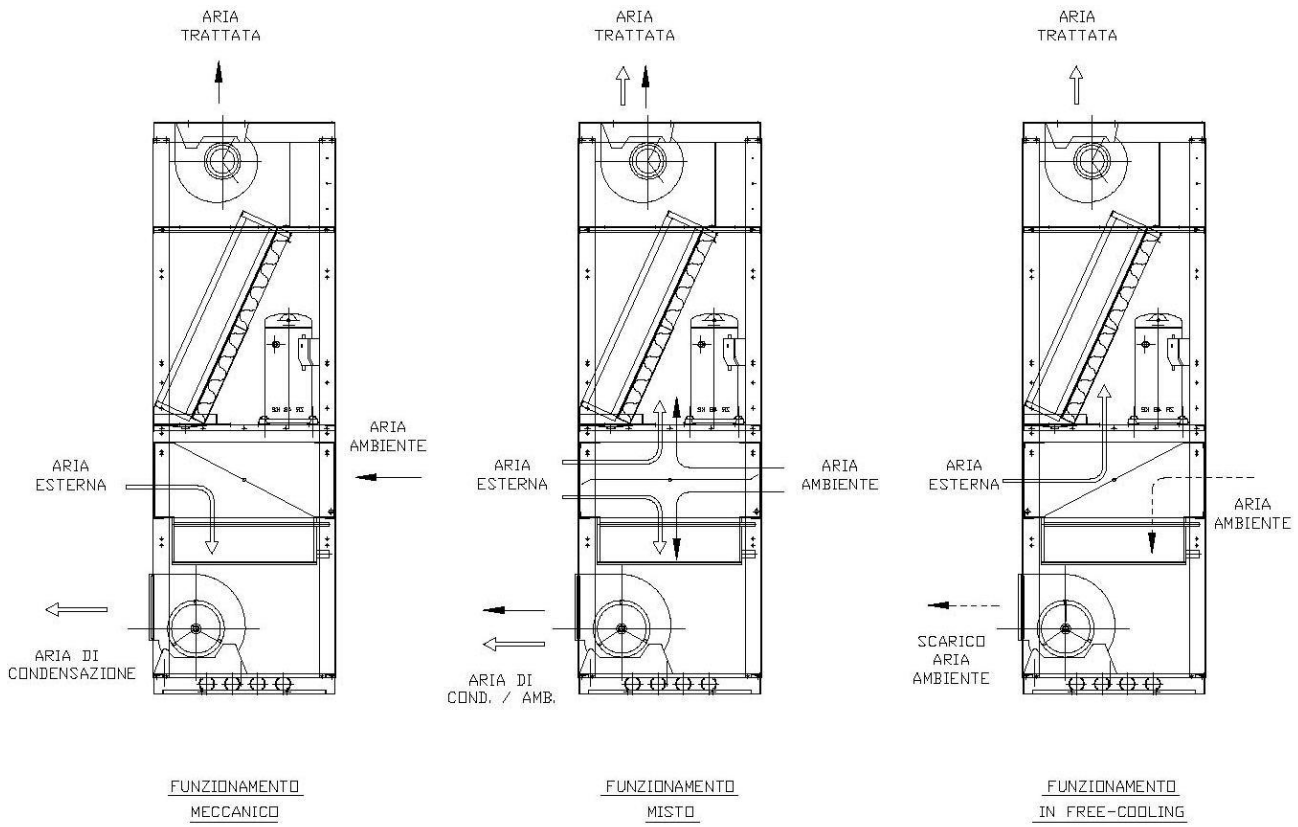

Version ED.A SF E K

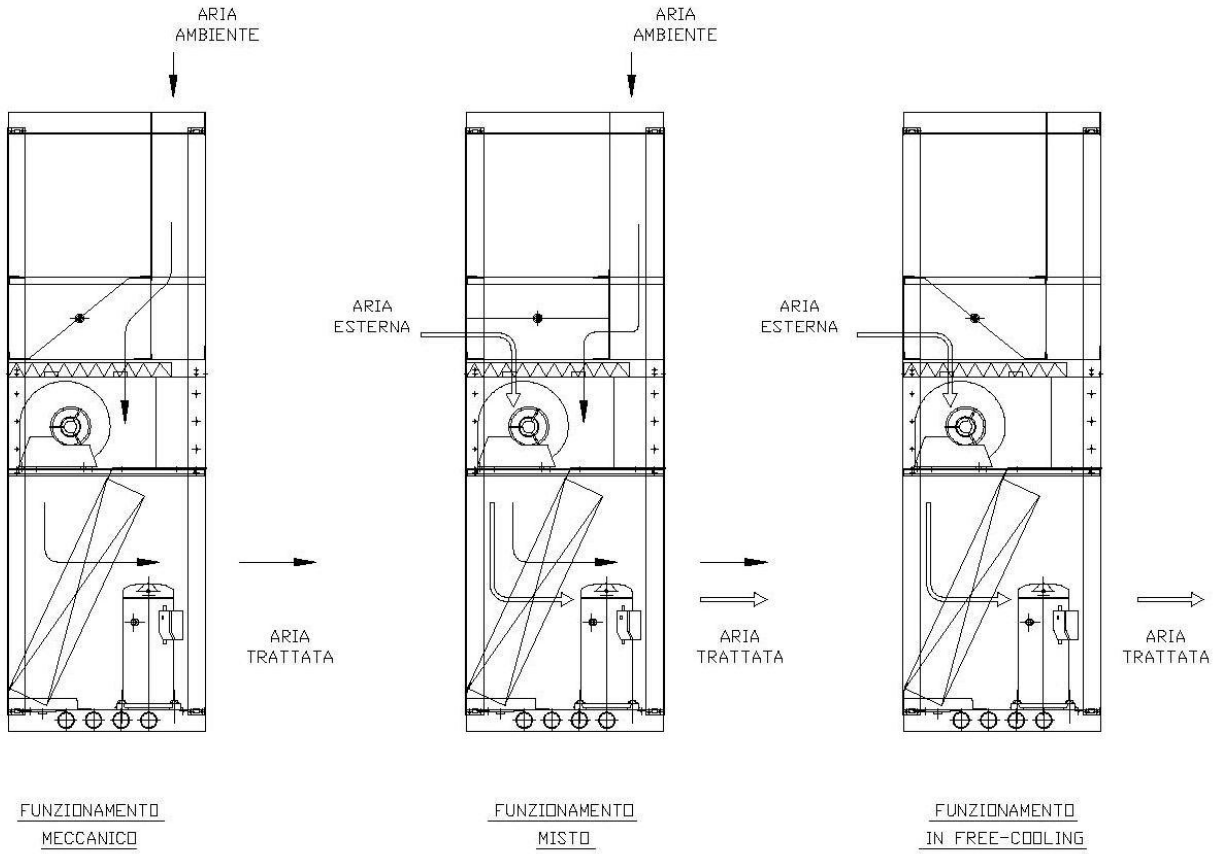

Version ED.A SF U K

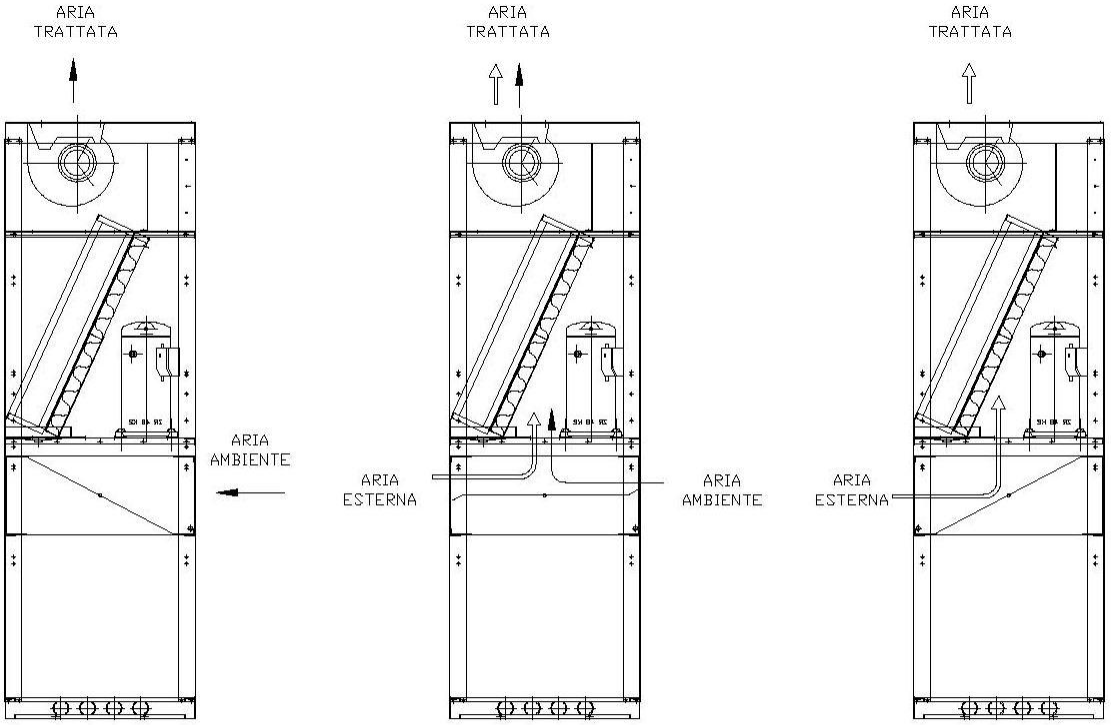

FUNZIONAMENTO MECCANICO

FUNZIONAMENTO MISTO

FUNZIONAMENTO IN FREE-COOLING

Version ED.A SF D K

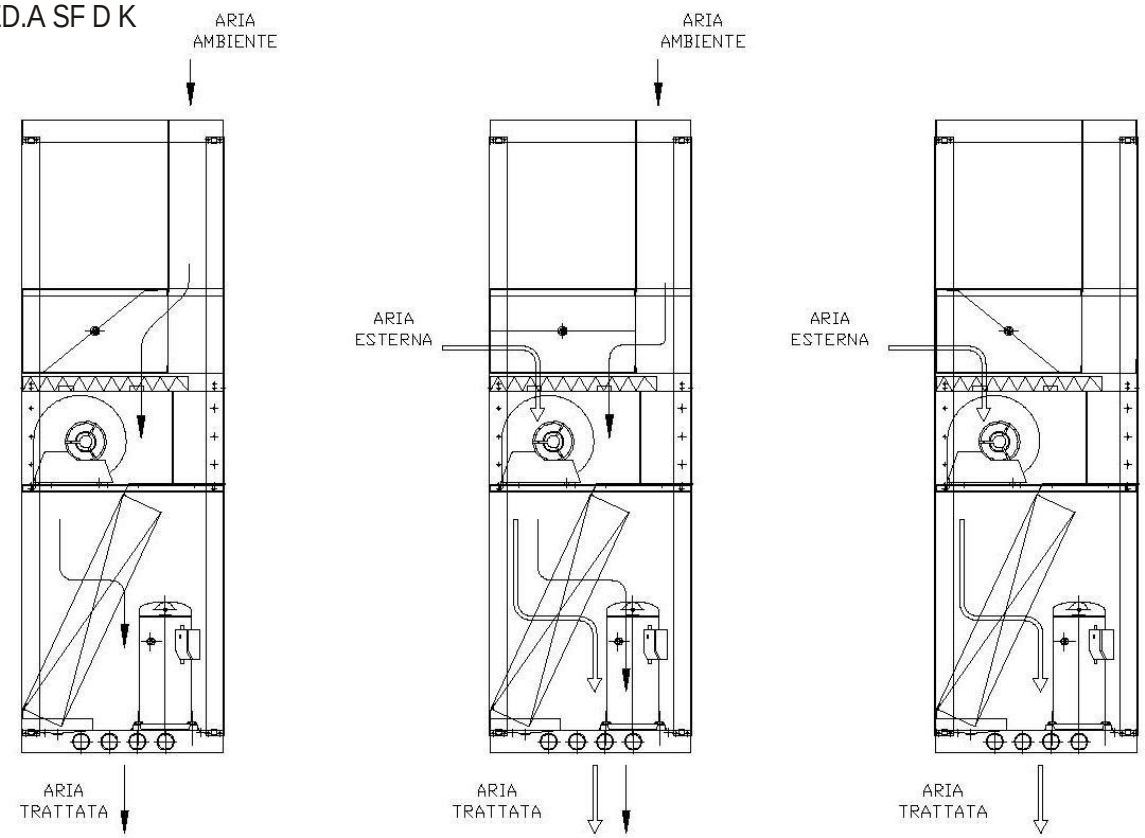

FUNZIONAMENTO MECCANICO

FUNZIONAMENTO MISTO

FUNZIONAMENTO IN FREE-COOLING

EMICON AIR CONDITIONING AND INDUSTRIAL APPLICATION

3.2 Main components

The units of ED series are made of the following main components:

- The housing is made of galvanized steel sections covered with plastic-coated steel plate panels. The panels are provided with internal polyurethane plate covers to reduce noise..
- The units are equipped with high efficiency scroll compressors, installed on rubber vibration dampers with thermal protection.
- Centrifugal fans directly coupled with low fan speed regulation
- Direct expansion cooling coil with copper pipes and aluminium fins.
- Stainless steel drain pan.
- Regenerable air filters with efficiency grade F4.
- Cooling circuit composed of all required components for a correct and reliable unit operation, as described in par. 3.2.1.
- The electric board in compliance with CE regulations and provided with main disconnecting switch; thermal and amperometric protections, contactors, auxiliary low voltage circuit, terminal board and control by microprocessor.
- Damper for free-cooling operation

Key:

1) Electric board
2) Compressor
3) Condenser***
4) Evaporator
5) Free-cooling Damper
6) Discharge fan
7) Condensing fan ***
8) Air filters

*** In the ED.A version points 3 and 7 are replaced by the remote condenser

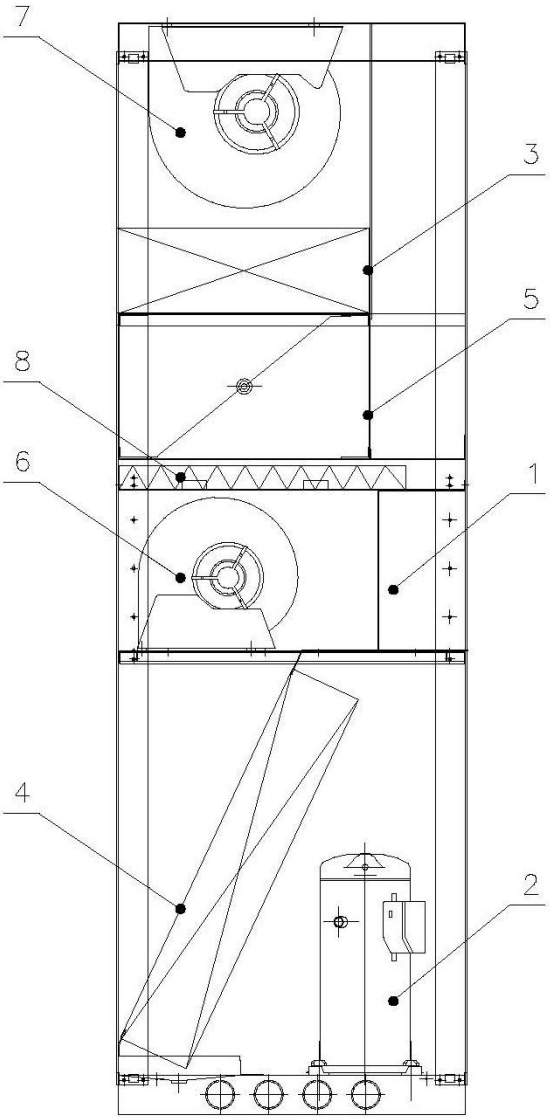

3.2.1 Cooling circuits

Air conditioning unit with inbuilt condenser and Free-cooling system serie ED.P SF

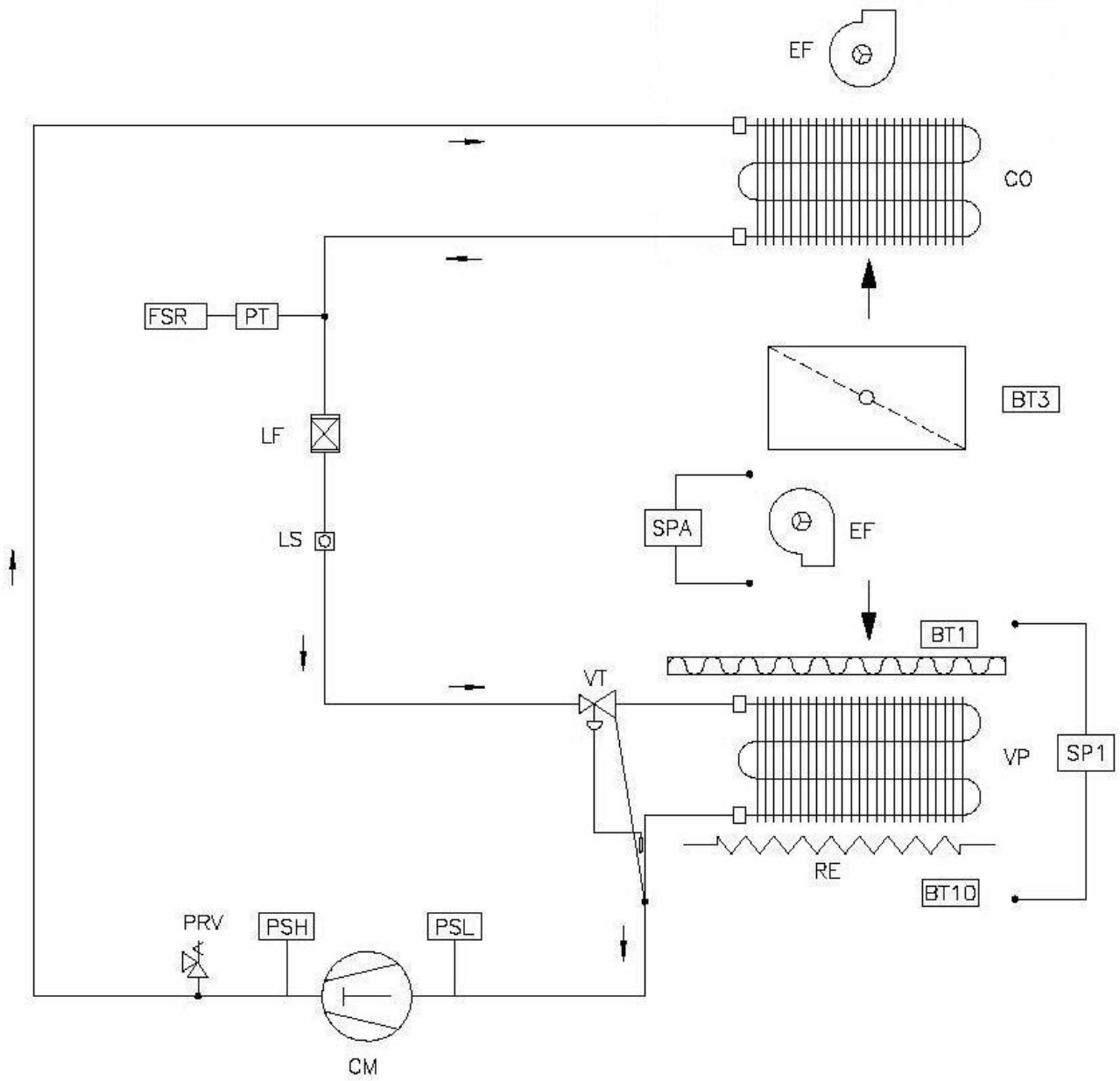

Air conditioning unit with inbuilt Free-cooling system and remote condenser serie ED. A SF

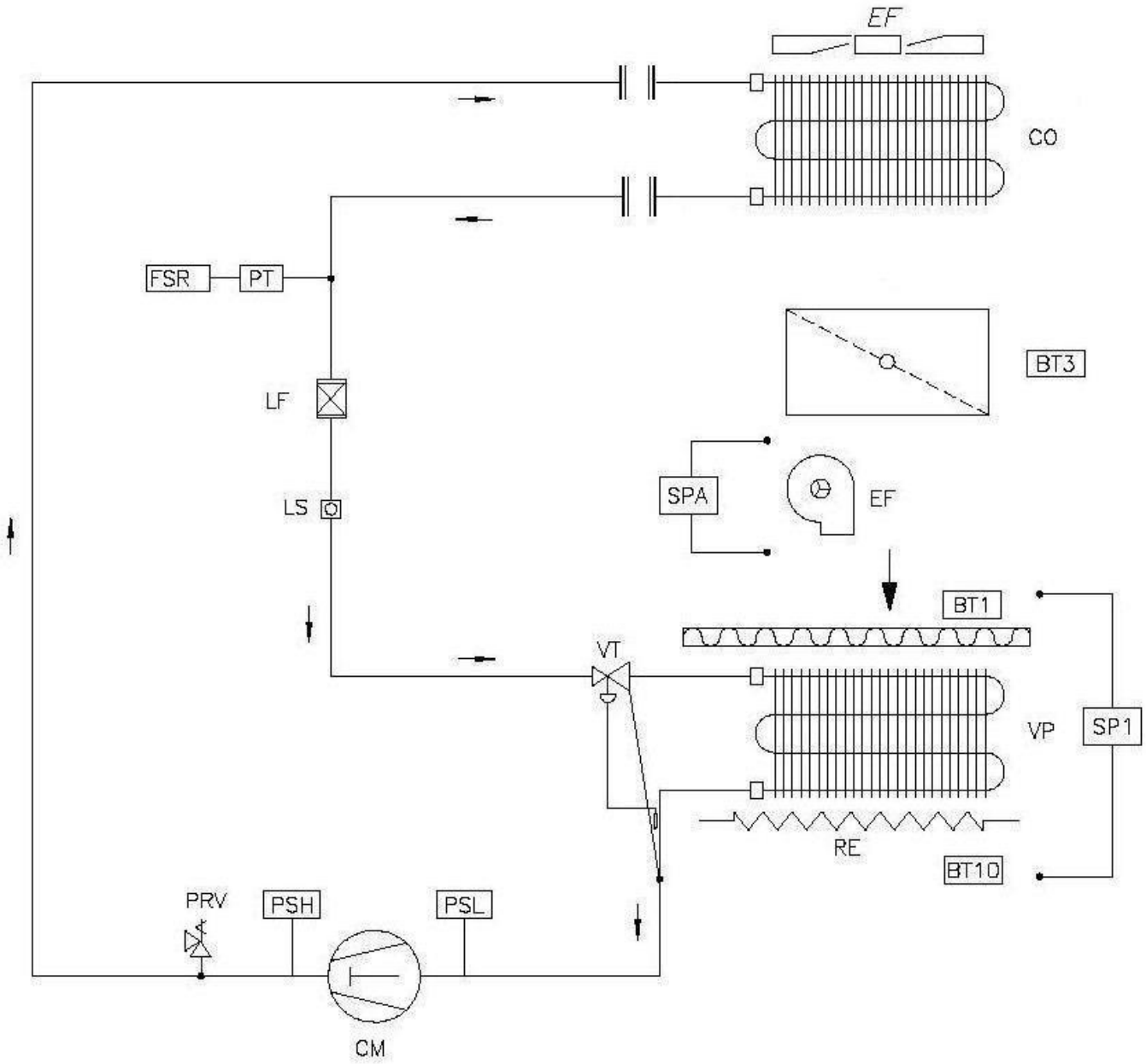

Cooling circuits key

AC	AIR HEAT EXCHANGER	**OT**	OIL RESERVE	**TWV**	3-WAY VALVE
AD	AIR DISCHARGE VALVE	**PDIO**	OIL GAUGE	**VE**	EXPANSION VESSEL
AV	VIBRATION DAMPER	**PDSO**	OIL LEVEL PRESSOSTATIC VALVE	**VP**	EVAPORATOR
BT1	REGULATING PROBE	**PDSW**	DIFFERENTIAL WATER SWITCH	**VT**	THERMOSTATIC EXPANSION VALVE
BT3	FREE-COOLING ANTI-FREEZE PROBE	**PIH**	HIGH PRESSURE GAUGE	**WC**	WATER COIL
BT 10	ANTI-FREEZE TEMPERATURE PROBE	**PIL**	LOW PRESSURE GAUGE	**WD**	WATER CHARGE AND DISCHARGE VALVE
CM	COMPRESSOR	**PIW**	WATER VALVE	**WE**	WATER EXCHANGER
CO	CONDENSER	**PRV**	OVERPRESSURE DISCHARGE DEVICE	**WF**	WATER FILTER
CT	CONDUCTIVITY PROBE	**PRW**	SAFETY WATER FLOW SWITCH	**WP**	WATER PUMP
EF	FAN	**PSH**	HIGH PRESSURE SWITCH	**WT**	WATER BUFFER TANK
EHA	ANTIFREEZE HEATER	**PSL**	LOW PRESSURE SWITCH	**BG**	HOT GAS COIL
EHC	CRANK-CASE HEATER	**PT**	PRESSURE TRANSDUCER	**YVCA**	HUMIDIFIER FILL VALVE
EV	SOLENOID VALVE	**RE**	ELECTRIC HEATER	**YVSA**	HUMIDIFIER DRAIN VALVE
FSR	FAN SPEED REGULATOR	**RV**	MODULATING VALVE		
FWV	4-WAY VALVE	**SA**	LIQUID SEPARATOR		
H	HUMIDIFIER	**SFF**	FREON-FREON HEAT EXCHANGER		
HR	HEAT RECOVERY	**SFO**	FREON-OIL HEAT EXCHANGER		
HT	HUMIDITY PROBE	**SL**	NOISE LEVEL REDUCER		
LF	DEHYDRATING FILTER	**SO**	OIL SEPARATOR		
LS	SIGHT GLASS	**SPA**	FLOW SWITCH		
LT	LIQUID RECEIVER	**SP1**	CLOGGED FILTER SWITCH		
NR	NON-RETURN VALVE	**SV**	SHUT-OFF VALVE		
OF	OIL FILTER	**TS**	SAFETY THERMOSTATIC VALVE		
OLR	OIL LEVEL REGULATOR	**TT**	TEMPERATURE PROBE		

3.3 Specification

The main technical features of the units are shown in the attachments.

3.4 Dimensional drawings

The unit's dimensions, ducts' size and when foreseen (ED.A versions) pipes' size to complete the cooling circuit are shown in the attached dimensional drawing.

3.5 Accessories

The units can be equipped with a wide range of optional accessories, the main of which are described in the following list:

AA: Flooding probe sensitive to the water present under the floor.
AE: Power supply different from the nominal power
AL: Smoke alarm.
B: The base frame in welded steel tubes is available for every unit model and its height is adjustable between 140 and 580 mm.
CI: Soundproofing covering on compressor (for silenced "S" versions).
CS: Compressor inrush counter
H: Humidifier.
IG: Watch card.
IH: Serial interface RS485.
IM: Seawood packaging
KC: Spare F4 effciency filters kit.
MF: Phase monitor
RE: Electrical heater with aluminium armoured elements and safety thermostat
RF: Power factor correction system cosφ > 0,9
RM: Epoxycoating of the coil for sea environment
RR: Coil with copper/copper fins

For remote condenser
BW: Operaton for external low temperatures (up to -40°C).
C2: two-circuit coils
CV: Wired fans
FV: Supports for vertical air flow version
IM: Seawood packaging
RG: Fan speed controller
RM: Coil with fins in marine alloy
RR: Coil with copper fins

4 - INSTALLATION

4.1 Identification tag

The data for the identification of the unit are marked on a permanent tag (Picture 1) attached both on the packing and inside the unit, close to the electrical panel.

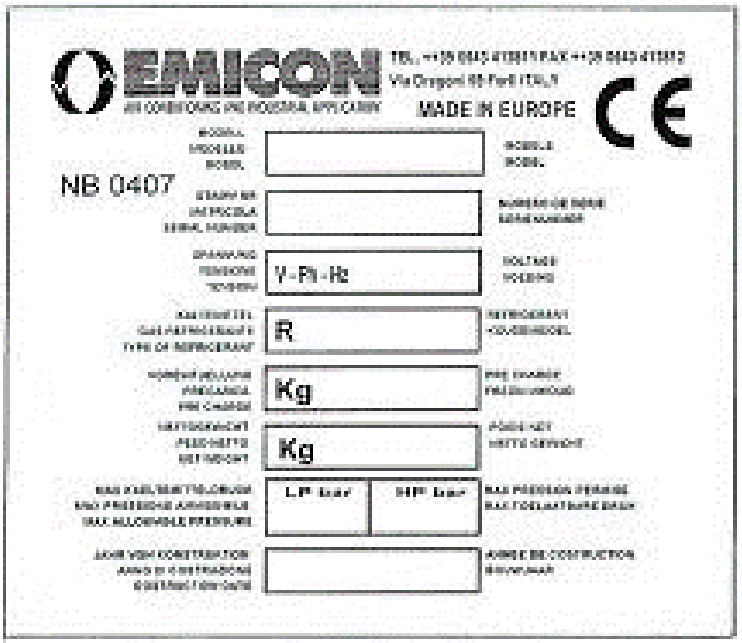

Pict. 1

The correct unit identification by means of the serial number is essential for the execution of any operation to carry out on the unit. The serial number must be always advised whenever submitting a request of technical service support.

4.2 Reception and inspection

It is very important to check the packing integrity immediately upon delivery. In case the packing is found damaged, it is necessary to accept the goods "with reservation" and indicate on the consignment note the state of the received goods and let the driver countersign it. Any claim concerning the delivered material must be sent to the manufacturer by fax or by registered letter within 8 days from the receiving date. It is advisable to unpack the unit only when the installation begins and possibly after the unit has been moved to the location where it must be installed.

It is forbidden to stack units, even if they are packed. If the unit is stored after receiving, it must be not exposed to weaher agents, even if packed.

4.3 Handling

The handling of the unit must be carried out by expert personnel, equipped with appropriate equipment in relation to the weight and to the dimensions of the machine. During the handling operation, the machine must be always kept upright.

The weight of some models is unbalanced: check the unit stability before starting to handle it.

For any unit handling, please follow the instructions shown in (Picture 2).
In case the fork lift is employed, the forks must be spaced out to the maximum allowed by the pallet size. In case the machine is moved by means of a crane, it is important to avoid that cables and belts exert a too high tractive effort on the packing that might damage it.

Angle α must not be greater than 30 °.

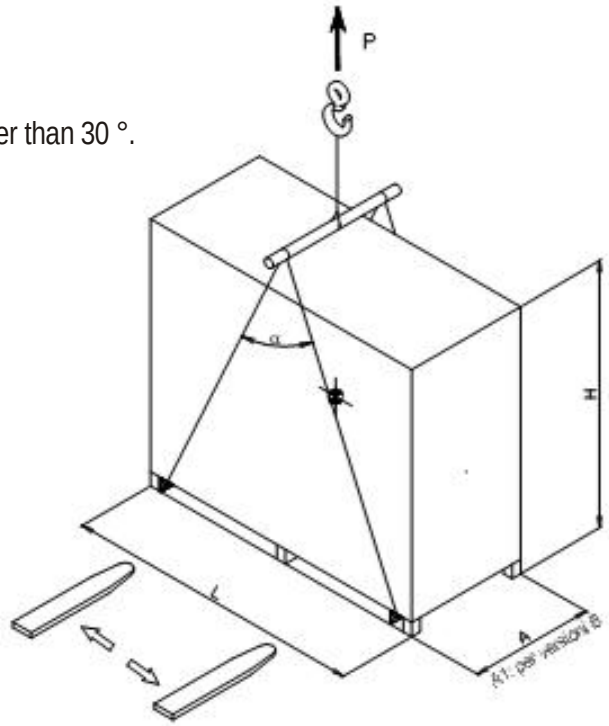

Pict. 2

The overall dimensions of the units packaging included are indicated in the packing list sent via @ to arrange loading.

.

4.4 Arrangements and placing

The installation of the machine is under the responsibility of the installer who must supervise the execution operations.
The execution of a correct installation presupposes that a plan has been drawn up by an expert and that is carried out by skilled and trained technicians.
In the following paragraphs there are some tips and information to keep in mind when planning and executing the machine installation.

☞ The unit installation must comply with local existing laws.

Before placing the unit, the following points must be checked:

- Connections for cooling, electrical, hydraulic and condensate drainage circuits must be done;
- Enough room must be left around the unit to allow the routine maintenance, as shown in Picture 3 by the dashed area in front of the machine. It is necessary to keep some free room on the right and/or left side of the unit if connections are on the unit sides. If possible, also leave the necessary free lateral room for special maintenance, such as compressor, heat exchanger and fans replacement;
- The floor where the machine is positioned can bear the total weight of the unit under normal operation

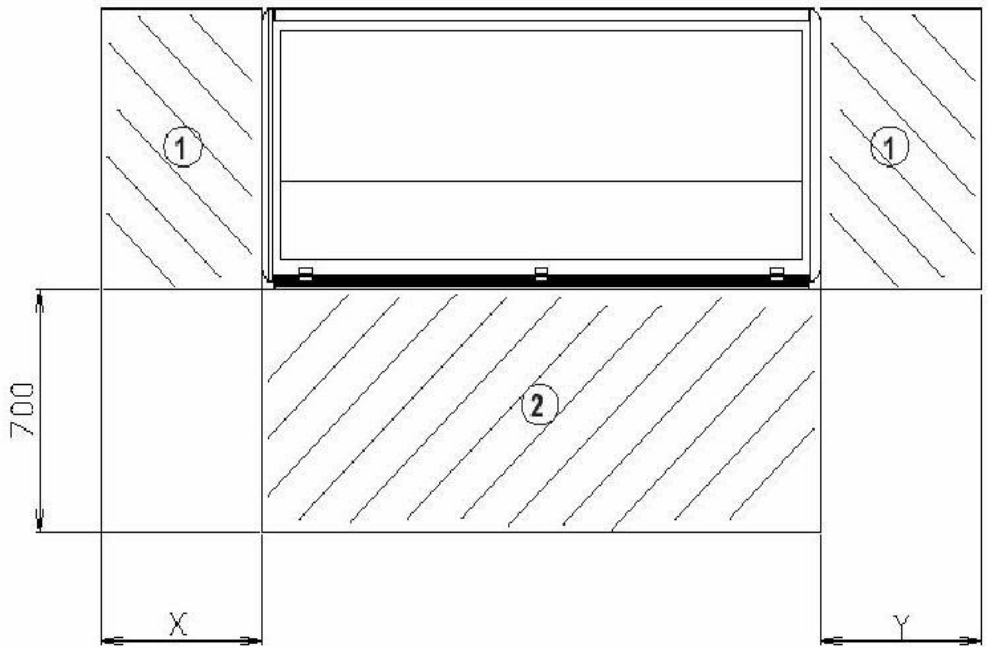

1: Special maintenance

2: Routine maintenance

Picture 3

X = 500 mm

Y = 500 mm

Before starting to handle the unit to position it, it is necessary to identify the best way to arrive to the place, taking into consideration the unit overall dimensions and weight, the available lifting equipment and any optional accessory dimensions.
All units described in this manual do not need any special foundation, since they can be simply laid down on the chosen surface or arranged on a base frame (option) just placing a rubber gasket of about 5 mm thickness underneath.
Make sure that the aeraulic features of the unit, as described in the attached data sheets, match those required for the undertaken project.
In case of units provided with downflow air discharge, it is necessary to take into account the height of the floating floor because it can greatly influence the unit performance.
In order to avoid high noise level and / or inacceptable reductions of airflow, the height of the floating floor should be never inferior than the unit width.
Make sure that the value of the pressure drop of the air distribution system is not higher than the unit available pressure in its standard configuration. In case of special requirement, higher levels of available pressure are available as an optional on ED.A versions.
Make sure that the number and the characteristics of the air suction and distribution grids are suitable for the unit airflow capacity.
For the installation of any spare accessory, strictly follow the instructions attached to each of them.

4.5 Cooling connections (ED. A)

These units are supplied with nitrogen charge (20 bar). Discharge pressure carefully only before carrying out the cooling connections.
Since the machines are conceived to work with air cooling system, copper pipes must be employed for the connections to their ventilated condenser units which are installed outdoor.
The piping scheme is shown in Picture 4 (ED.A)

Even if refrigerant is not classified as a toxic substance, pay the maximum attention during the refrigerant charge operation and strictly follow the security requirements in compliance with law by decree 81/08 ; in particular, the appropriate and necessary equipment must be worn to avoid contact, inhalation and ingestion.
If any of the above mentioned cases occurs, it is advisable to consult the security specifications for the operations of first aid and emergencies concerning the employed refrigerant.
In case it is necessary to go to the doctor, it is advisable to bring these refrigerant security specifications with you.

Pict. 4: Piping diagram ED.A

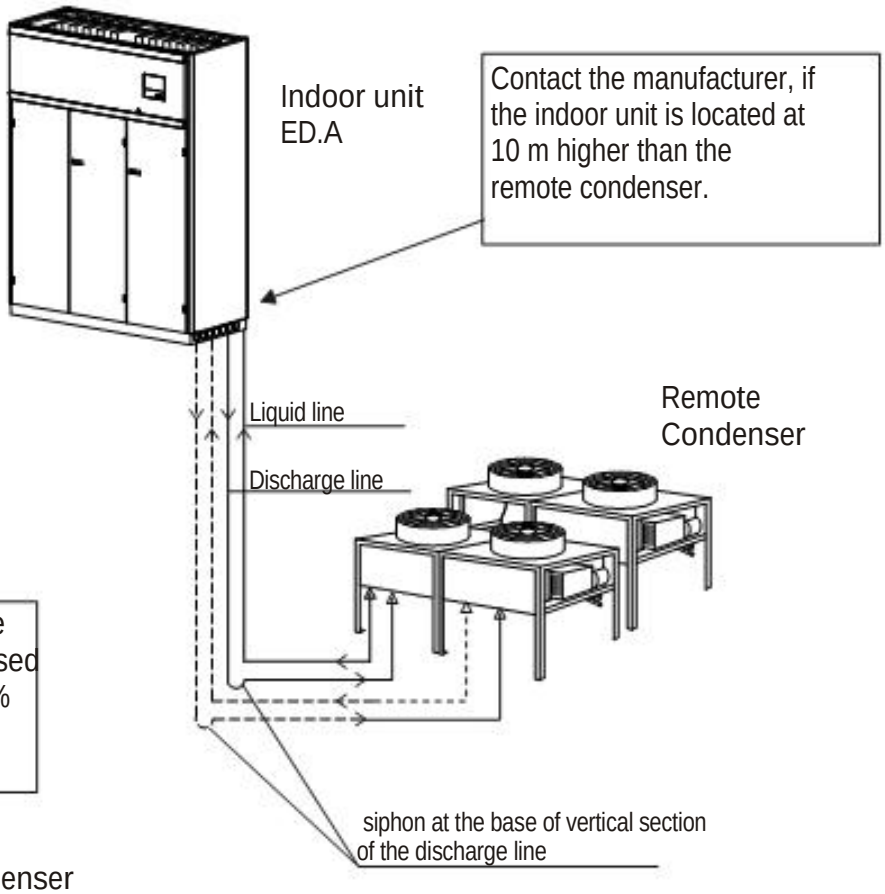

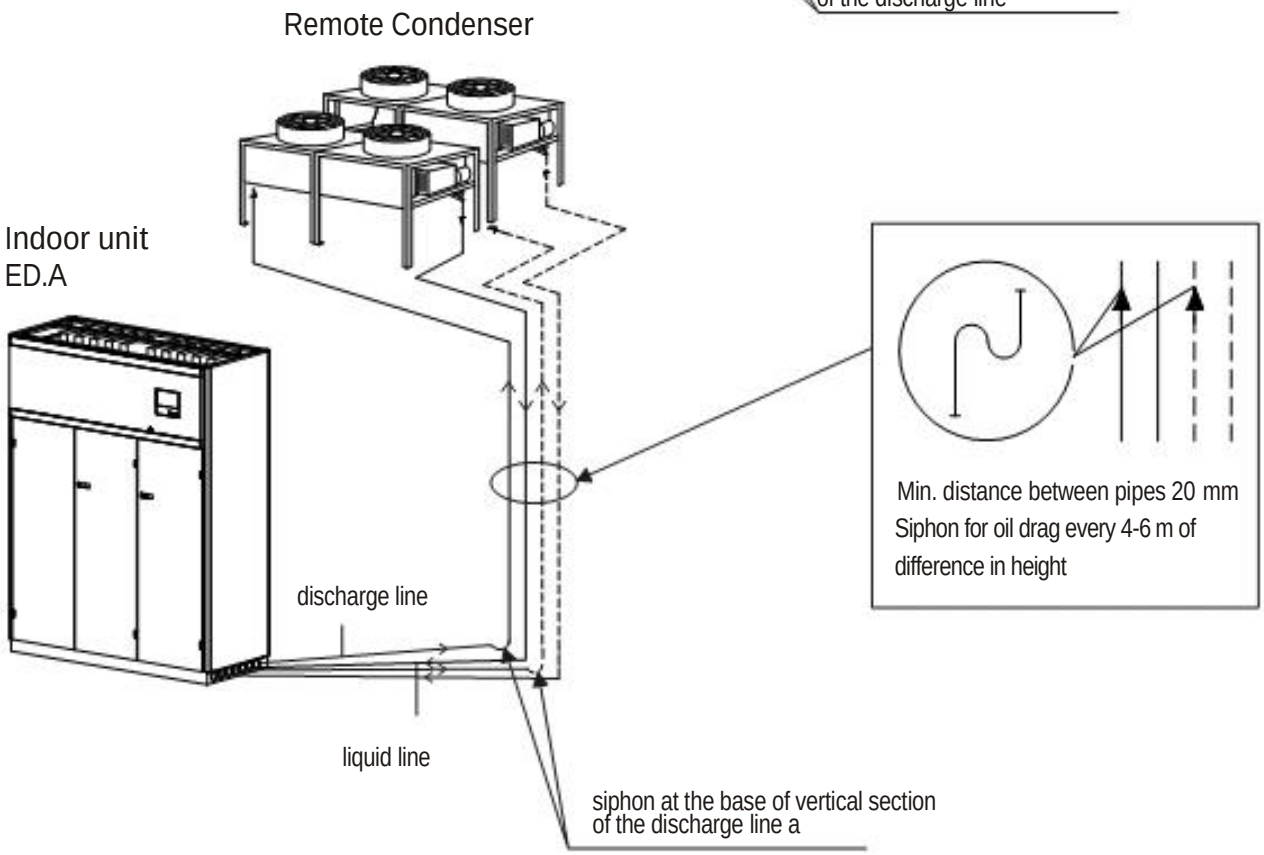

The pipe installation must be performed by a skilled refrigeration technician.
The piping path must be as shortest as possibile in order to reduce the quantity of refrigerant gas and oil circulating and to reduce the pressure drop. If copper pipes have to cross electric wires, it is advisable to isolate the tubes in order to avoid the danger of inducted current. Lines must be realised with copper tubes, specifically conceived for cooling systems and they must have an appropriate diameter, as shown in Table 1 (ED.A).
It is here reminded that the total piping length is the result of its geometrical calculation plus the length of valves, bents and fittings present on the line itself. If failing to have more accurate information, you can obtain the total length by multiplying the geometrical length of the line by 1,5 or 2.
Copper pipes must be adequately supported by brackets so as to make them secure and fasten, and at the same time allow thermal expansion of the copper tubes.
If the discharge pipes go through rooms where people normally live, it is advisable to install rubber vibration dampers and a sound attenuator as nearest as possibile to the compressor.

The piping insulation, except for special requirements, can be applied on the following parts only:

- Discharge pipes (ED.A), where pipes are lapped by the unit air discharge (in the suspended floor);
- where pipes can be accessibile to unauthorized people so that any damage or skin burn can be avoided.

During the piping installation, the refrigerant tubes must be sealed to prevent humidity and dirt go inside. The piping arrangement must consider easy access for operations like bracket insertion, tube welding and inspection.
Once pipes are placed, before carrying out the connections to the unit, the system must be leak tested by means of pressurized nitrogen. It is recommended to mark the pressure test value on a pressure gauge.

⚠ Do not exceed 20 bar when pressing with nitrogen.

The nitrogen also enables the circuit to dry up. If the circuit pressure drops, this means that the circuit is not sealed off. It is, then, necessary to let in a small quantity of refrigerant so that it is possible to locate any leak by means of appropriate detectors. If a leak is detected, after the repair, a new leak test must be carried out again.
Finally, the vacuum and the charge of the system can be executed following the instructions as described in par. 4.9

Pict. 4

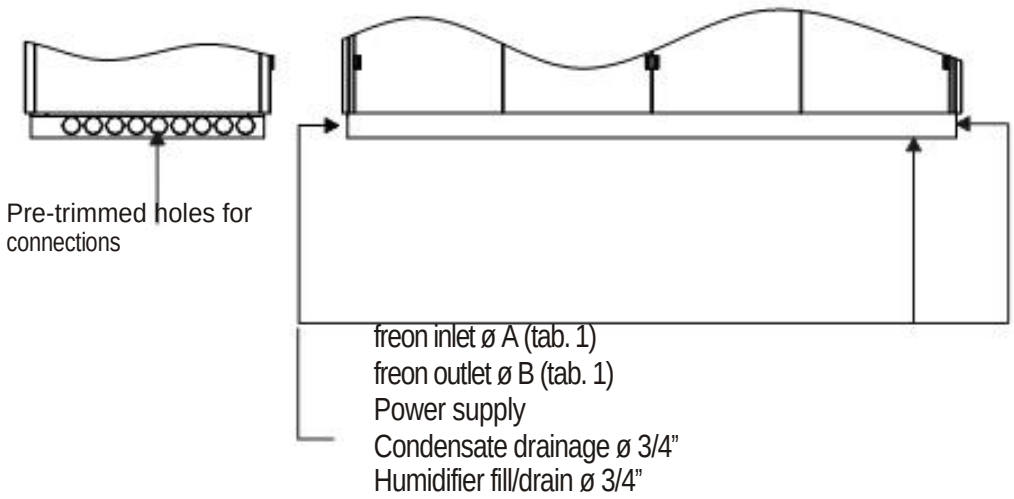

Table 1

ED. A		Leq						Fig. 9	
		10 m		20 m		40 m			
		M	L	M	L	M	L	ØA	ØB
61		12	10	16	10	16	10	10	12
81	172	16					12		
91	192					18			
101	202				12				12-18
121	232			18		22			
141	272						16		
151	302		12						
171	342-362	18		22				12	
201					16	28			22
221	412-442								
241	452-482	22							
251	492-532		16						
291	542-572			28				16	
301	602								
321	622								
341	682						18		
351									
361	762								
431	842	28				35			28
451	892				18				
471	1002								
521	1102						22		
531				35					
581									
601									
651					22				
721			22					22	
821						42			

Table key:

Leq: Length of the piping (m)
L: Recommended diameter for the liquid piping (mm)
M: Recommended diameter for the discharge piping (mm)
øA: Diameter for freon inlet connection
øB: Diameter for freon outlet connection

In case of longer lines than what stated in the above table, please contact the manufacturer.

4.6 Condensate drainage connection

The air conditioning unit is provided with a stainless steel tank collecting the condensate generated during the dehumidification phase. The tank must be connected to the drainage collector by means of a flexible pipe having internal diameter of 27 mm. The pipe shall be placed with a slope not lower than 1,5% (1,5 cm/m) toward the outlet direction.

☞ To guarantee a correct condensate drainage, it is necessary to set up a siphon of at least 20 mm in the flexible pipe before doing the connection to the drainage collector.

4.7 Air Connection (version with inbuilt air condensation)

The proper sizing and carrying out of the air connections are essential to grant the good unit's operation and a suitable sound level in the room.
While sizing the ducts pressure drops, air flow and air speed are to be considered and must be congruent to the unit's features.
Particurarly consisder that pressure drops exceeding the unit's available pressure leed to a flow reduction and consequently to the unit's stop.

4.7.1 Assembling

During the assembling it is advisable to pay attention to :

- The ducts' weight must not rest on the connecting flanges
- Place AV mounts between ducts and unit
- The connection to the flanges and among the several ducts' sections must assure the air tightness, avoiding air loss on the discharge and air return in the suction which penalize the overall plant efficiency
- Possible external ducts must also be watertight
- Limit the pressure drops optimizing the trial course, the type, the number of curves and branching

4.7.2 Minimum Ducts' dimensions

In order to make the ducts' sizing easier, but to make sure that the air flow is the one required to assure the good unit's operation, the following table (TAB. 2) is supplied to provide the available pressure values and the minimum expected duct's surface .

Table 2

MODEL	AVAILABLE PRESSURE Pa	MINIMUM SURFACE Cm²
51	65	1830
71	65	
131	70	
161	65	
181	70	2562
191	70	
262	70	4026

4.8 Electric connections

Before carrying out the connection of the unit to the power supply, it is necessary to carefully check the following:

- the power tension and frequency are the same data as stated on the unit identification tag (Picture 1);
- make sure there is no humidity trace inside the electrical panel and on all electric and electronic components. In case humdity is found, detect and eliminate the cause of the infiltration;
- make sure the circuit and the electric components have not been damaged during transportation, handling and positioning. If any damage is detected, proceed with the needed repair.
- The electrical wires must be properly tightened; if necessary, tighten adequately any loose wire.

Only authorized and trained personnel can carry out any intervention on the electrical wiring.

Check the wiring diagram placed inside the key board.

Strictly comply with existing local regulations when performing the electrical connections.

4.8.1 Power supply connection (Pict. 5)

The unit standard power supply tension is 400 V/3f/50Hz; on request, it is also possible to supply units with arrangements for special power supply tension (check the identification tag and the wiring diagram).
The unit is normally powered with a 5-pole cable (3 phases + neutral + earth).
Connect the phases and the neutral to the terminals of the main switch (L1, L2, L3 and, respectively, N) and the earth wire to its corresponding terminal (PE). Use a power supply cable of adequate cross section and of moderate length to avoid voltage drops.

Protect the power supply cable by means of an automatic differential switch of appropriate size and features. The cross section of the power suppy cable and the size of the automatic switch can be found on the attached wiring diagram, where it is indicated the main switch size according to different unit models and configurations

4.8.2 User's terminal board connection

A user terminal board (Picture 6) is available with free contacts designed for:

- generic alarm state (1);
- unit remote ON/OFF (2).

For the exact correspondence of the terminal numbers, check the wiring diagram.

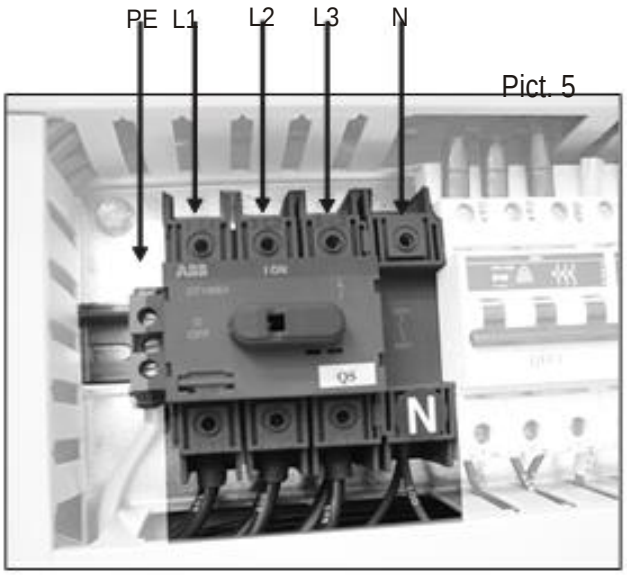

Pict. 5

Pict. 6

4.8.3 Warning in case of connection to the terminal board when optional " TE" is installed

In case the unit is provided with optional TE (electronic thermostatic valve), pay the maximum attention to the spare battery power supply.
"GB1" (spare battery) is an electronic device which guarantees a temporary power supply to the "Driver" device in case of sudden power supply shortage, thus allowing the immediate shutoff of the thermostatic valve
Before perfoming any operation, it is advisable to check the charge of the battery as per the instructions;

- power the control
- press the button I/O
- check parameter N4

For further information, check the control manual on chapter 7, section "input-output/driver" and chapter 9. If battery is flat, 48 hours are needed to charge it.

During the check-up operation before the unit startup, it is advisable to disconnect the spare battery to avoid that continuous power and disconnection operations might damage it.
- open the duct above the component GB1 (driver battery EVV) and disconnect the power supply cables (see the picture)

Once the check-up test is completed, it is reminded to re-connect the battery to bring the air conditioning unit in a safety status

4.8.4 Condenser connections (ED. A)

The condensers must be connected to the appropriate wire terminals in the indoor unit by means of an electric cable having an adequate diameter and suitable features related to the capacity and the environment.

4.9 Vacuum and charge execution of the system (ED.A,)

4.9.1 General warnings

For a correct and reliable operation of the system, once the connection lines between the indoor and the outdoor units are carried out, it is extremely important to clear the circuit of any air, humidity, non-condensable gas and, in general, of any polluting substance presence before executing the refrigerant charge. The presence of solid particles like metal dust, welding debris and dirt of small dimensions that cannot be detected by the mechanical filters can cause serious damages to the surfaces in movement and involve a reduction in efficiency and of compressor life

Do not perform any holes in the cooling circuit, the complete rescue of metal particles produced would be then prevented.

If excessive humidity persists inside the cooling circuit, negative consequences can arise. Humidity can freeze inside the thermostatic valve and can even clog it up, causing the unit stop because of the low-pressure alarm. A significant amount of humidity can saturate the filter drier in a very short time and it will be necessary to replace it (with consequent operating interruption of the system). Humidity chemically interacts with the refrigerants and especially with polyester lubricant oils (normally employed with refrigerant type R407C, R134a, R404A, etc.). This interaction creates acid substances that, if present in fair amount, can damage the compressor electric motor insulation provoking motor burns and rusted copper pipes that can generate solid impurity.

Reduce as least as possible the exposure of the circuit and its part to the atmosphere, especially if compressors are charged with polyester oil.

If non-condensable gases are not eliminated accurately from the circuit, they can gather inside the condenser and the liquid receiver. If gases are in the condenser, they can cause a reduction of the useful thermal exchange surface, meaning a condensing temperature increase and, consequently, a reduction of the energy efficiency and of the system reliability. In worst cases, the unit can be stopped by the activation of the high-pressure switch. Big amounts of non-condensable gases gathered in the liquid receiver can cause the malfunctioning of the thermostatic valve, in case a mixture of refrigerant and non-condensable vapor replaces liquid refrigerant. If this happen, there will be a strong reduction of the evaporating temperature up to the activation of the low-pressure switch, in worst cases, thus involving a reduction of the unit cooling capacity and a reduction of the system efficiency and life.

Pict. 7

Pict. 8

4.9.2 Vacuum execution

Once the cooling lines are completed and checked that no leaks are present, the vacuum must be executed as described here below (see Par. 4.5).

The indoor unit is normally leak tested by the manufacturer by cooling circuit pressurization.

The unit is supplied with nitrogen pressure (20 bar). Therefore, if during the installaton it results that the cooling circuit is not pressurized, this means that there is a leak. It is necessary to detect it and repair it before going on with the installation operations.

Before starting the circuit vacuum operation, make sure all nitrogen contained in the liquid receiver has been discharged.

a) Connect a vacum pump (a two-stage pump able to keep a pressure of 0,04 mbar - Pict. 7) to the system employing the charge connections present on suction (Picture. 8) and on liquid lines.

Do not use the compressor for carrying out the vacuum inside the cooling circuit.

Make sure all valves are open in order to avoid that some circuit parts result cut off.

b) Let the vacuum pump work until the pressure shown on the appropriate vacuum meter (Picture 8) does not go below 10 mbar.
c) Isolate the pump from the circuit by means of the appropriate cut-off valves and wait for 30 min.
d) If pressure goes on increasing during the pump stop period or if it is impossible to reach the desired pressure value, it means there is a leak in the circuit. It is necessary to detect and repair the leak, and after that, a new procedure must be performed again starting from step b).
e) If pressure goes up until it reaches a climax value, it means the circuit contains a big amount of humidity. In this case, it is necessary to let in nitrogen in the circuit (up to about 2 bar) and then repeat steps b), c) and e) for at least twice, then proceed with step f).

f) If pressure stabilizes after a short increase, it means the circuit is leak proof and reasonably dried. Start up again the pump after the shut-off valves are open and let it operate for 2-4 hours according to the circuit size after pressure has returned below 10 mbar.

Do not operate the compressor nor emply a megahom meter while the circuit is vacuum.

4.11.3 Refrigerant charge execution

Once vacuum is completed, the circuit must be charged with the exact quantity of refrigerant and, if necessary, of anti-freeze oil.

Avoid any refrigerant gas release in the environment during the charge operations.

ED.P units are supplied with refrigerant and anti-freeze oil charge included, therefore they must not undergo the following operations, unless some maintenance operations on the cooling circuit are needed

a) Connect a full up refrigerant gas cylinder to the circuit employing the charge connections present on the liquid line.

Make sure the refrigerant you are going to use for the circuit charge is the same as shown in the unit identification tag. In case of discrepancies, contact the manufacturer.

b) Open the cylinder valve and charge the refrigerant until the circuit pressure reaches the same pressure as in the cylinder (if needed, repeat the operation with additional gas cylinders).

If the refrigerant is a mixture compounds, make sure to let enter the circuit in a liquid state in order to avoid compounds separation. On this purpose, cylinders are provided with two distinct valves: one for the vapor and one for the liquid.

c) Shut off the cylinder valve, disconnect it from the liquid line and connect it to the suction line (possibly prior to the evaporator)

d) Start up the unit, open the cylinder liquid valve and complete the charge (if needed, use more cylinders) until the sight glass located immediately after the filter drier becomes clear and does not present foam or gas bubbles during the operation in nominal conditions.

In order to facilitate the charge operation, the following tables show, as an indication, the necessary amount of refrigerant to charge the different types of indoor units and the corresponding connecting pipes. For a correct calculation of the refrigerant quantity, it must be also taken into account the volume of the outdoor unit cooling circuit and of any other component installed (such as additional liquid receivers, oil separators, etc.). In case the cooling lines are very long or in case oil separators are installed on the compressors discharge, a fair quantity of anti-freeze oil must be added.

☞ Check if the employed oil is compatible with the one charged in the compressor (check it out in the compressor's identification tag).

In case oil separators are employed, add the lubricant quantity suggested by the manufacturer.
If cooling lines are longer than 30 m, charge about 0,2 kg of oil every 10 m of piping (beyond 30 m). In any case, check the correct oil charge by checking the oil level through the compressor sight glass after about 30 minutes of standard operation mode.

☞ An overload oil charge can lead to a system efficiency drop and to compressor breaking.

Table 3

Table 10.c		Refrigerant weight for every 10 m of piping										
D_e (mm)	6	10	12	16	18	22	28	35	42	54	64	76
M_{asp} (kg/10)	0,003	0,013	0,020	0,040	0,052	0,079	0,13	0,20	0,30	0,49	0,71	1,0
M_{man} (kg/10m)	0,011	0,042	0,07	0,13	0,16	0,25	0,42	0,6	1,0	1,6	2,3	3,3
M_{liq} (kg/10)	0,15	0,55	0,86	1,7	2,2	3,3	5,6	8,4	13	21	30	43

Table key
D_e = external pipe diameter
M_{asp} = refrigerant weight for the suction line
M_{man} = refrigerant weight for the discharge line
M_{liq} = refrigerant weight for the liquid line

5 - OPERATION

5.1 First startup

Before starting the unit, the following simple operations must be carried out.

5.1.1 Cooling circuit (ED.A, ED.P)

Once all operations are completed as described in par.4.9 'Vacuum and charge execution of the system', the unit is ready for the startup. Make sure the valves are open according to the following instructions:

- Unscrew the stylus protective cap (Pict. 9);
- Rotate the stylus anti-clockwise until the end (Pict. 10);
- Rotate the stylus clockwise for one turn (if the manometer plug 1 is employed);
- Screw well the cap tightening it, so to avoid any gas leakage.

Pict. 9

1

Pict. 10

5.1.2 Startup

Perform all operations as described in par. 4.10 'Electric connections' and then follow the instructions here below:
Turn the main switch to ON position; make sure the unit is OFF from the keyboard.

Wait at least for 3 hours before starting the unit to allow the oil sump heater to pre-heat the oil. Start the unit pressing the ON/OFF button on the microprocessor keyboard..

In case of 3-phase motors, check the fans and the compressors rotation direction; if rotation is reversed, two out of the three phases must be inverted in the terminals of the main switch.

Once the unit is started, after a short period needed to the microprocessor for an auto-test, the unit electric fans will start to rotate. At this point, all system components will start working automatically according to the selected and detected thermal and humidity parameters.

To stop the air conditioning unit, push the ON/OFF button on the microprocessor keyboard.

If the unit should not work for more than 24 hours, turn the main switch to OFF position.

5.1.3 Setup

The setup must be performed when the unit is operating in conditions as close as possible to the nominal ones. Make sure:

- The thermal load is adequate;
- Doors and windows are shut;
- Surrounding spaces are clean.

Check the suction gas heating and, if needed, adjust the thermostatic valve setting as described here below. When the unit is working in nominal conditions, connect a manometer on the low pressure side. Check the gas temperature on the compressor intake (Picture 12) by means of a thermometer (Picture 11). The overheating intake value is the difference between the detected temperature and the saturation temperature (dew value for mixture) corresponding to the pressure shown on the manometer. If overheating is over 10°C, the thermostatic valve must be opened, while if it is below 5 °C, the valve must be shut off (Picture 13 cap removal and Picture 14 opening adjustment).

Valve adjusting operations must be always carried out with caution, turning the adjusting screw only half turn each time; wait for few minutes before every new adjustment in order to allow the unit to reach steady conditions.

Pict. 11

Pict. 12 example

Gas: R407 C
Intake temp.: 15°C
Intake pressure: 5,5 bar at 10°C
Overheating:
15 -10 = 5°C

Pict. 13

Pict. 14

The thermostatic valve adjustment is a very delicate operation, therefore it must be carried out by a skilled technician.

5.1.4 Microprocessor setting

Make sure the desired thermal and humidity parameters are set on the microprocessor.

If the preset parameters need to be changed, proceed as described in the microprocessor manual (see attachment).

Standard units are designed to work with room temperature between 22 and 27 °C (50% relative humdity); working at lower temperatures can generate frost on the evaporator.

5.1.5. Steam production setting (unit with humidifier)

Steam production must not exceed 60 - 70% of humidifier maximum capacity in order to guarantee a long operating life of the unit.

To set and modify the operating parameters, check the humidifier manual (here attached).

Table 4: Safety devices setup

Device	Bar Intervention	Bar Reset
High pressure switch	27,5	22
High pressure safety valve	29	
Low pressure switch	2,3	3,5

5.2 Fault alarm and display system

The troubleshooting is realised by the microprocessor, which activates an alarm and shows on its display the type of fault occurred (see also the attached microprocessor manual).

Since the alarm state is very often generated by an unfitted electric contact, in case of fault make sure all wiring connections are plugged in the corresponding terminals.

In case of fault, consult the attached microprocessor manual to check the parameters setting has been done properly.

5.3 Troubleshooting

TROUBLE	POSSIBLE CAUSE	CHECK / CORRECTIVE ACTION
1) The unit does not work	A) The electric panel is not powered	Check presence of electric tension; make sure the main switch is closed.
	B) The auxiliary circuit is not powered	Check fuses FUT and FUA
2) The unit does not start	A) The microprocessor does not start the unit	Check the electric connections to the microprocessor
	B) The external impulse to the microprocessor fails	Check the remote ON/OFF contact is closed
3) Room temperature too high (high temperature alarm signal)	A) The unit does not work	See troubles 1 and 2
	B) The control system setting is not correct	Check the setting of the control system
	C) The air flow capacity is too low	See trouble 6
	D) The compressor does not work	See trouble 13
	E) The compressor output is not sufficient	1) See trouble 9 2) See trouble 12
	F) The control system does not work	Consult the attached Micropressor manual
	G) Thermal load higher than estimated	Check the room thermal load value
4) Room temperature too low (low temperature alarm signal)	A) The control system setting is not correct	Check the setting of the control system
	B) The electric heaters do not work (if installed)	See trouble 15
	C) The control system does not work	Consult the attached Microprocessor manual
	D) Thermal loss higher than estimated	Check the thermal loss value
5) Room humidity too high (if the humidity control is installed) (high room humidity alarm)	A) The control system setting is not correct	Check the setting of the control system
	B) Latent load higher than estimated	Check the room latent load value
	C) The compressor does not work when in dehumidification phase	See trouble 13
	D) The control system does not work	See the attached Microprocessor manual
6) Low or no air flow (flow or fans alarm)	A) Fans are not powered	Check the fans electric circuit
	B) Clogged filter (filter alarm, if installed)	Clean or replace the filter
	C) Obstruction in the air duct or excess of pressure drop in the air ducts	Check the total pressure drop and compare it with the unit available pressure
	D) Fan heat protection system is activated	Check fan winding resistance; after reset, check tension and electric absorption
7) High pressure switch is activated	A) The control system of the condensation pressure is not working properly (if installed)	Make sure the control system of condensation is set and it works
	B) One or more condensing fans are out of order (ED.A, ED.M units)	Check that the internal heat protection of the out of order fans does work: replace the defective fans
	C) The high pressure switch is not properly set	Replace the high pressure switch
	D) Output pressure too high	See trouble 9
	E) The condensation water capacity is not sufficient (ED.W unit)	1) Check all valves are positioned correctly; 2) Make sure there is no air in the circuit
8) Low pressure switch is activated	A) Low pressure switch is not set	Replace the low pressure switch
	B) Suction pressure too low	See trouble 12

TROUBLE	POSSIBLE CAUSE	CHECK / CORRECTIVE ACTION
9) Compressor high pressure output	A) Air to the condenser too hot	Check the presence of any condensation air re-cycle
	B) Insufficient condensation air flow	Make sure there is no obstruction to the air flow in the finned exchanger coil (see par. Arrangements and placing)
	C) Suction pressure too high	See trouble 11
	D) Clogged fins of the condenser coil	Clean the exchanger coil removing the clogging material (leaves, paper, seeds, etc.)
	E) Circuit charged with too much refrigerant: condenser partially flooded	Under-cooling of the refrigerant too high: remove some refrigerant from the circuit
	F) Non condensable air or gas in the circuit	The flow sight glass presents gas bubbles. The compressor discharge temperature is high; the cooling circuit must be discharged and recharged after the vacuum execution
	G) Too hot water to the plate condenser	Check the capacity of the condensation water cooling system
	H) Insufficient condensation water flow capacity	Check the system pressure drop and compare it with the pump avaialble pressure
	I) Plate condenser encrusted	Wash the exchanger with specific products
10) Compressor low pressure output	A) The control system of the condensation pressure is not working properly	Check setting and working of the condensation control system
	B) Suction pressure too low	See trouble 12
11) Compressor suction high pressure	A) Thermal load higher than estimated	Check the room thermal load value
	B) Discharge pressure too high	See trouble 9
	C) Liquid refrigerant return to the compressor intake	Make sure the overheating of the thermostatic valve is correct; check the valve bulb is well placed, fixed and insulated.
12) Compressor suction low pressure (possible frost on the coil battery)	A) Room temperature too low	See trouble 4
	B) The air flow capacity is too low or absent	See trouble 6
	C) Clogged regrigerant filter	Check the refrigerant filter
	D) Defective thermostatic valve or not properly set	Check the overheating of the thermostatic valve is correct: check the thermostatic element is not broken
	E) Insufficient refrigerant charge	Check possible leakage and recharge
	F) Discharge pressure too low	See trouble 10
13) The compressor does not work	A) Automatic switch activated	Reset the automatic switch; check the cause of the short circuit
	B) Compressor internal heat protection activated	Check the compressor winding resistance; after reset, check tension and electric absorption; check the working parameters are in the normal range of values
	C) Contactor does not work	Check the contacts and the contactor coil
14) The compressor is noisy	A) Liquid return to the compressor	Check working and overheating of the expansion valve
	B) The compressor is damaged	Replace the compressor
15) The electric heater does not work (if installed)	A) Safety thermostat activated	1) The air flow capacity is too low: see trouble 6 2) Check if safety thermostat works properly and replace it if needed
	B) Fuses activated	Replace the damaged fuses
	C) Contactor does not work	Check the contacts and the contactor coil
16) Probe alarm	The probe corresponding to the alarm code is defective or disconnected	Check the connection of the probe; in case of defect, replace it

5.4 Routine maintenance

	Monthly	Quarterly	Annual
Air filter cleaning	X		
Condensate tank cleaning		X	
Condenser coil cleaning			X
Humidifier cleaning		X	
Check of cooling lines and their insulation		X	
Compressor noise level check	X		
Fans noise level check		X	
Electric connection tightening check		X	
Contactor status check		X	
Check of duct insulation status			X
Check damper and probes for free-cooling		X	
Sight glass check		X	
Electric absorption check		X	
Working pressures check		X	
Unit general conditions check			X
Probe setting check			X
Set parameters check		X	
Refrigerant filter pressure drop check			X
Safety valve check			X
Safety pressure valve check		X	
Electric protection check		X	

6 - DISMANTLING

When the unit has to be dismantled, drain the cooling circuit and collect the refrigerant gas by means of an adequate receiver, in order to protect people and environment.

☞ Never release the gas contained in the cooling circuit in the environment.

When dismantling the unit or when replacing the compressor, carefully collect the oil compressor and deliver it to an authorized company for oil disposal.

☞ Never release the oil compressor in the environment.

USE AND MAINTENANCE MANUAL

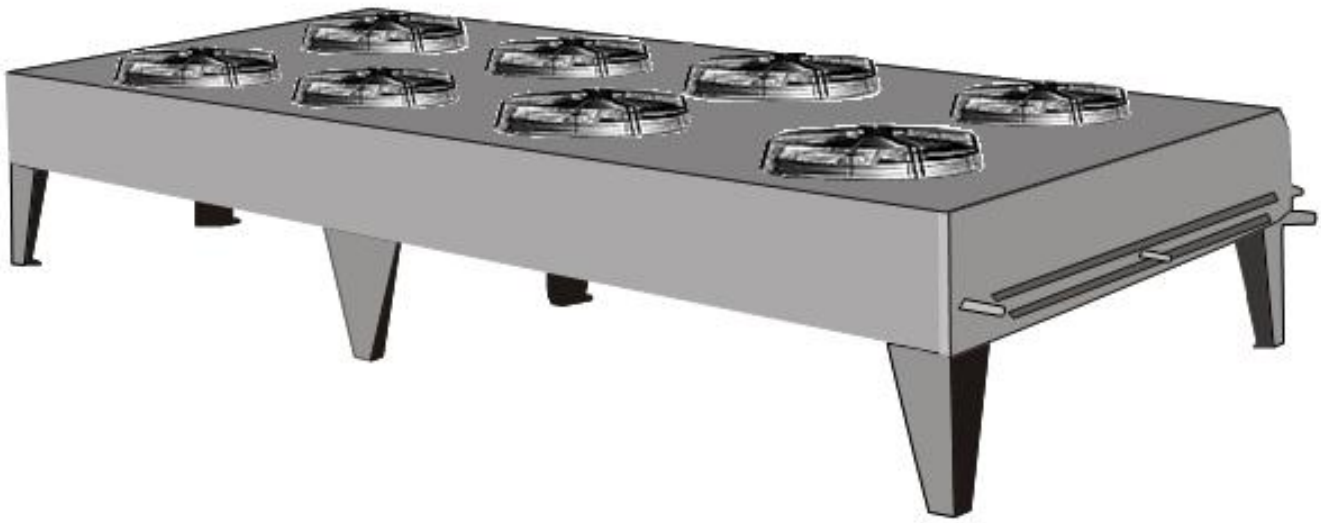

AIR CONDENSERS

With axial fans

CR/CRS/CRU

TABLE OF CONTENTS

1 WARNINGS .. Pag. 36

2 TRASPORTATION . Pag. 37

3 CHECKS FOR A CORRECT INSTALLATION .... Pag. 37

4 WARNING FOR A CORRECT PLACING . Pag. 38

4.1 Technical Specification Pag. 38
4.2 Placing . Pag. 38
4.3 Electric connections Pag. 38

5 INSTALLATION .. Pag. 39

6 GENERAL MAINTENANCE ... Pag. 40

1 - WARNINGS

Keep this technical manual all along the condenser's life.
Read carefully the manual before the installation and before any operation on the unit.

Use the condenser only for the use it has been designed for: the manufacturer disclaims all responsibility in case of misuse.

The interpreting key for the condenser initials is described here below::

CR = Remote condenser with axial fans

Noise level: standard
S silenced
U ultra-silenced

Condenser capacity

CR S 2

2 - TRANSPORTATION

During the transportation, avoid to press the packing improperly and always keep it in the position indicated on it.

Unpack the unit as close as possible to the place where it has to be installed. Once unpacked, avoid to hit the components.

During the air conditioner installation and handling, wear the appropriate gauntlets in order to avoid to be hurt by the unit cutting parts (ex. Fins).

3 - CHECKS FOR A CORRECT INSTALLATION

in order to avoid any damage during the lifting operation, use a beam and connect it to all available hooks as shown in Picture 1

a) Make sure the floor and the structures can bear the unit weight;
b) Do not install the unit in closed spaces;
c) Leave an adequate free space to allow a correct air suction and discharge and an easy maintenance (see Par. 4.2);
d) Make sure the condenser is properly fixed to the supporting floor;
e) Check the electric power supply fits with the motor-fans characteristics;
f) Condensers are equipped with axial motor-fans, therefore they are not appropriate for being ducted or for bearing higher available pressure;
g) Make sure the operating conditions (temperature and pressure) are conform to the ones estimated in the plan;
h) Make sure all electric connections are in compliance with existing local regulations;
i) Only qualified personnel is allowed to have access to the unit for any required operation, in accordance with the laws in force;
l) During the installation, suitable fixing and supporting systems for the unit must be foreseen.

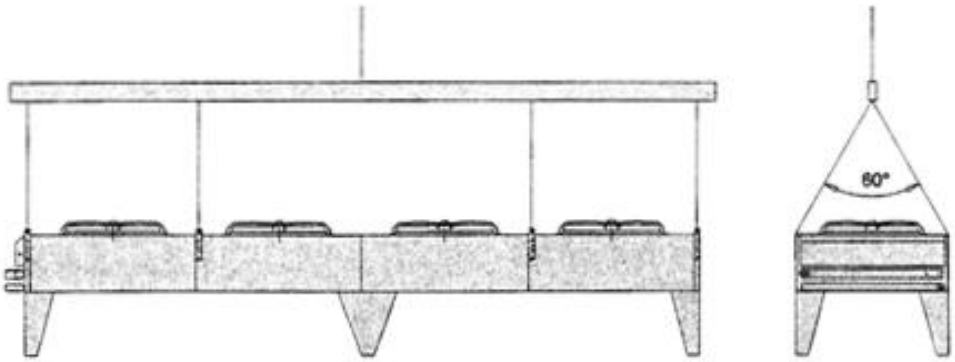

Pict. 1

Before any maintenance operation, make sure the electric power supply is disconnected from the main source: the electric parts might be connected to an automatic control.

4 - WARNINGS FOR A CORRECT PLACING

4.1 Technical specification

See the attached technical specification sheet.

4.2 Placing

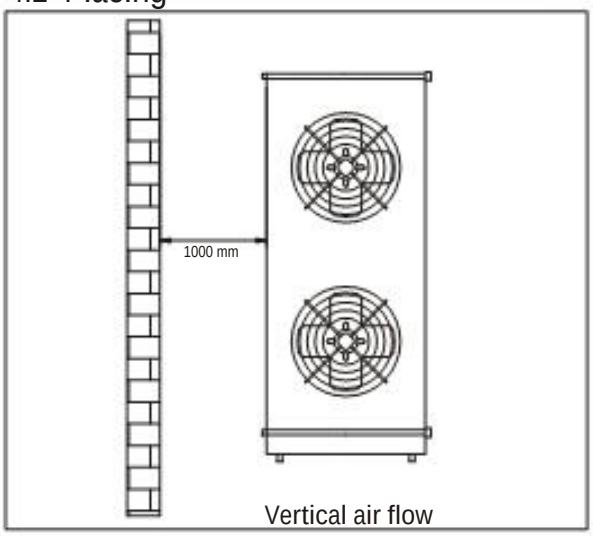

Vertical air flow

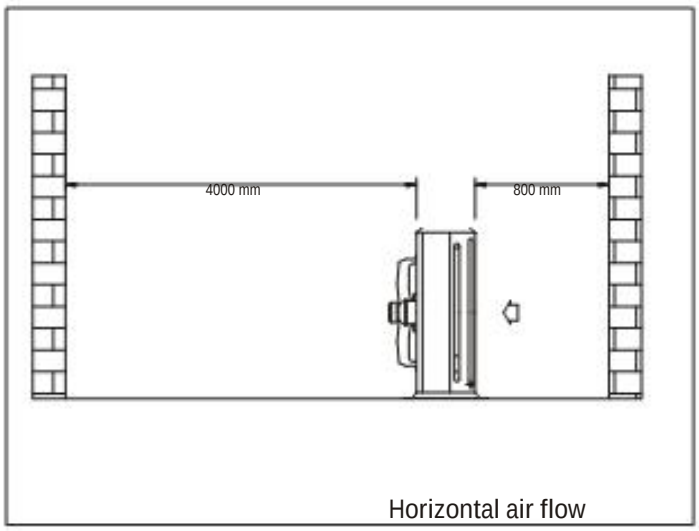

Horizontal air flow

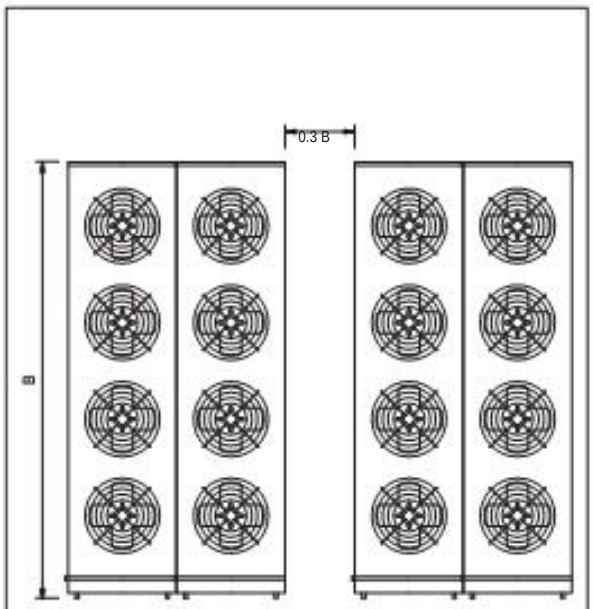

Minimum distance between units in open field

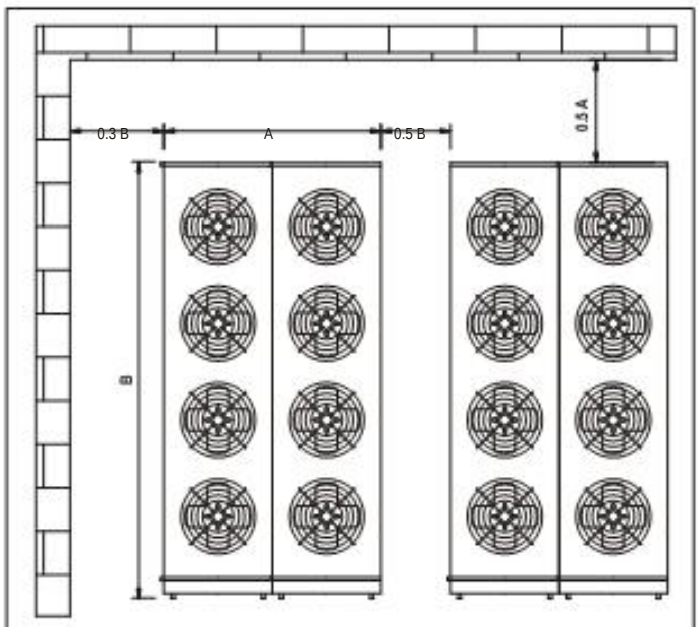

Minimum distance between units in presence of walls

4.3 Electric connections

See the attached wiring diagram.

The thermal contacts are activated following the temperature and they are installed in the motors windings: when the temperature exceeds the maximum allowed permanent value, an electric contact is opened.

Carefully follow the attached wiring diagram to avoid any damage to the motor. Before employing an rpm regulation system, check if it is compatible with the motor: non-compatible systems can cause noise and damages. Emicon A. C. S.p.a. disclaims all responsibility for the performance of units equipped with a regulation system.

EMICON
AIR CONDITIONING AND INDUSTRIAL APPLICATION

5 - INSTALLATION

For a correct installation, follow the tips here below:

1) Size properly the pipes in order to avoid as much as possible a pressure drop and a reduction of refrigerant speed, since both factors are essential for the oil drag. If necessary, an oil separator must be installed (3).
2) In case the discharge line goes through rooms where people normally live, install both a vibration damper (1) and a silencer (2) as close as possible to the compressor, on the discharge line.
3) Do not convey the air flow directly on a surface having a reflecting power or able to increase the condenser noise level.
4) Do not reverse for any reason the refrigerant inlet and outlet collectors.
5) Place the condenser preferably in a position where the coil has a minimum direct exposure to sun radiations since they could change the condensation pressure.
6) In all installations, make sure the airflow does not collide with other currents of air going in the opposite direction.
7) Strictly follow the local regulations in force.

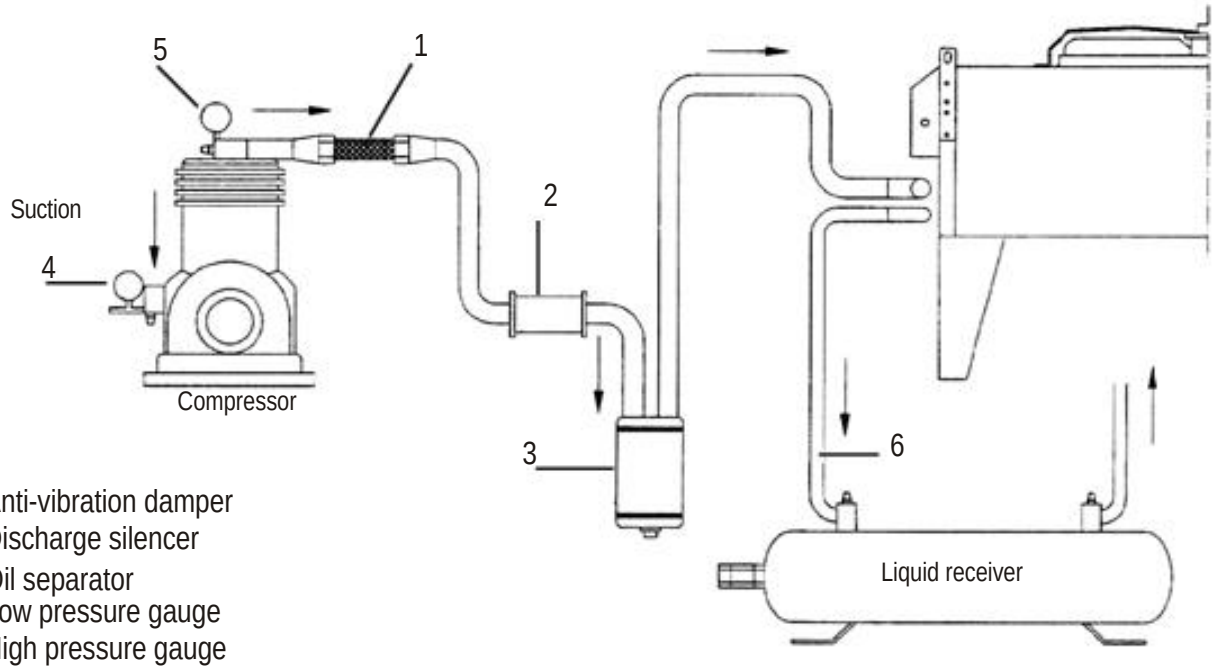

1. Anti-vibration damper
2. Discharge silencer
3. Oil separator
4. Low pressure gauge
5. High pressure gauge
6. A slope not lower than 1% must be foreseen between the outlet collector and the liquid receiver

The following table shows the necessary quantity of refrigerant for a correct charge of the different models of remote condensers.

CONDENSER MODEL			REFRIGERANT CHARGE
CR	CRS	CRU	
8	/	/	0,8 kg
11	7	/	1,5 kg
14	10	/	1,2 kg
18	13	/	1,8 kg
27	22	18	2,9 kg
30	25	20	3,8 kg
36	29	23	4,5 kg
45	/	28	6,0 kg
46	35	/	7,5 kg
49	42	32	5,7 kg
53	/	/	7,6 kg
59	57	43	9,0 kg
71	67	51	12 kg
90	85	68	14 kg
97	/	/	15 kg
/	99	74-87	18 kg
/	/	98	24 kg

6 - GENERAL MAINTENANCE

Check periodically the fasteners, the elctric connections and the connections to the cooling system.

Clean periodically the unit to avoid any accumulation of harmful substances. It is advisable to use normal soapy water. Do not use solvents, aggressive, abrasive or ammoniac agents.

Only expert and qualified personnel can carry out the general maintenance.

EMICON
AIR CONDITIONING AND INDUSTRIAL APPLICATION

CE

USE AND MAINTENANCE MANUAL

STEAM HUMIDIFIER

1 INTRODUCTION ... Pag. 44
1.1 Principle of operation ... Pag. 44
1.2 Operation and unit components ... Pag. 44

2 USE ... Pag. 45
2.1 Main warnings ... Pag. 45
2.2 Supply water characteristics ... Pag. 45
2.3 Startup, check and stop ... Pag. 46
2.3.1 Preliminary checks ... Pag. 46
2.3.2 Startup with vacuum cylinder ... Pag. 46

3 SETTING ... Pag. 47
3.1 Electric components ... Pag. 47
3.2 Dip-switch ... Pag. 47
3.3 Connectors ... Pag. 47
3.4 Led ... Pag. 47
3.5 Digital input terminals ... Pag. 47
3.6 Wiring diagram for single phase humidifier ... Pag. 48
3.7 Wiring diagram for three phase humidifier ... Pag. 48
3.8 Types of alarm ... Pag. 49
3.9 Alarms description ... Pag. 50

4 MAINTENANCE ... Pag. 51
4.1 Steam cylinder replacement ... Pag. 51
4.2 Periodical checks ... Pag. 51
4.3 Unit cleaning ... Pag. 52

5 TROUBLESHOOTING ... Pag. 53

6 DISMANTLING ... Pag. 53

1 - INTRODUCTION

The humidifier described in this manual is an immersed electrode steam humidifier and it is equipped with the most advanced microprocessor technology.
The operation is completely automatic and it can be employed in any geographical area since it is able to adapt its functioning according to the chemical - physical characteristics of water, provided that water is drinkable and it is not demineralised.

1.1 Principle of operation

By giving an electric tension to two metal electrodes immersed in water, an electric current is generated and it heats water up to make it boil. As a matter of fact, as long as water contains a minimum quantity of salts, it acts as an electric heater which closes the circuit between two electrodes.

1.2 Operation and unit components

When a steam production is needed, the electronic control sends an electric tension to the electrodes immersed in the water contained in the boiler, by closing the appropriate contactor. Steam production is controlled with an amperometric transformer (TAM) which measures the energy transferred from water.
When water level decreases and, consequently, energy goes below the set parameter, the fill electrovalve is open to allow water to reach the fill tank. From here, water flows inside the cylinder by gravity.
The two small electrodes located on the top of the cylinder monitor that the water level does not exceed the maximum value. As a matter of fact, beyond this level the water is drained by means of the overflow pipe into the fill tank.
The other two electrodes placed on the fill tank measure the supply water conductivity. This is useful for the electronic control in order to optimize the humidifier operation following the chemical characteristics of water.
The fill electrovalve is activated from the control as much frequently is needed depending on the supply water characteristics in order to maintain the optimal saline concentration inside the cylinder.

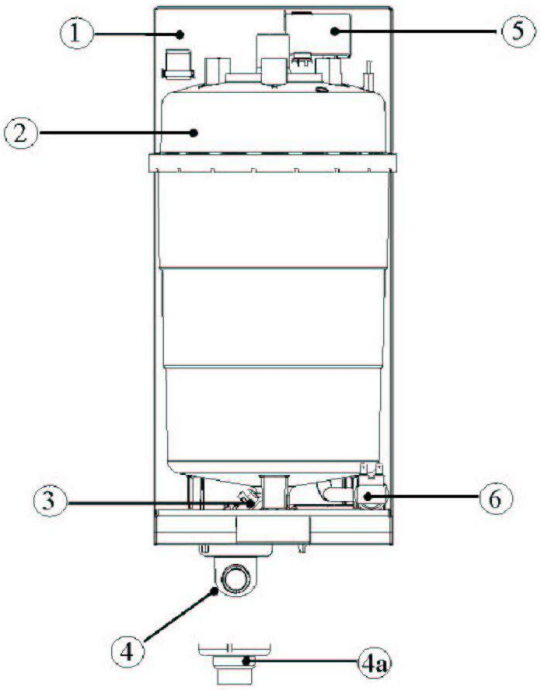

n.	description
1	Supporting frame
2	Cylinder
3	Draining electrovalve
4	Exhaust pipe fitting swinging at 90°
4a	Flat Pipe fitting (equipped)
5	Fill tank + Conductivity meter
6	Supply electrovalve

2 - USE

2.1 Main Warnings

The electric components contained in the unit are powered.

Only qualified and trained personnel must carry out any operations on the unit.

The unit contains hot surfaces, in particular:

- The steam cylinder can reach temperatures over 60°C;
- The steam produced and therefore the draining pipe, in particular conditions, can reach the temperature of 100°C.

n.	description
1	Supply Electrovalve
2	Flow limiting device
3	Supply Pipe
4	Fill Pipe
5	Overflow pipe
6	Electrodes to measure conductivity
7	Supply tank - overflow
8	High level electrodes
9	Steam outlet
10	Electrodes (2/6 for monophase models, 3/6 for triphase models)
11	Cylinder case
12	filter
13	Draining Electrovalve
14	Exhaust corrugated pipe
15	Draining Column
16	Exhaust pump

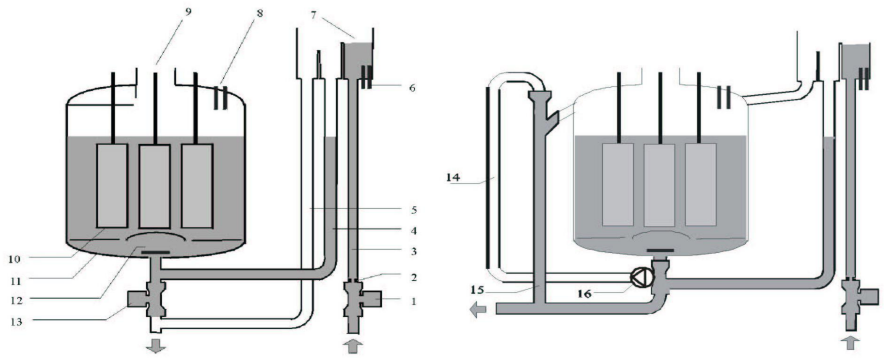

2.2 Supply water characteristics

LIMIT VALUES OF SUPPLY WATERS WITH MEDIUM-HIGH CONDUCTIVITY
FOR HUMIDIFIERS WITH IMMERSED ELECTRODES

				LIMITS Min.	LIMITS Max
Hydrogenions Activity	pH	-		7	8,5
Specific conductivity at 20°C	σR 20 °C	-	µS/cm	300	1250
Total dissolved solids	TDS	-	mg/l	(1)	(1)
Fixed Residual at 180°C	R_{180}	-	mg/l	(1)	(1)
Total hardness	TH	-	mg/l $CaCO_3$	100(2)	400
Temporary hardness		-	mg/l $CaCO_3$	60(3)	300
Iron + Manganese		-	mg/l Fe+Mn	0	0,2
Chlorides		-	ppm Cl	0	30
Silicon Dioxide		-	mg/l SiO_2	0	20
Residual Chloride		-	mg/l Cl	0	0,2
Anhydrite		-	mg/l $CaSO_4$	0	100
Metallic matters		-	mg/l	0	0
Solvents, diluents,soaps, lubricants		-	mg/l	0	0

(1) Values depending on the specific conductivity; generally speaking: TDS~= 0,93 * σ 20; R_{180}~=0,65 * σ 20
(2) Not less than 200% of chlorides content in mg/l of Cl
(3) Not less than 300% of chlorides content in mg/l of Cl

LIMIT VALUES OF SUPPLY WATERS WITH MEDIUM-LOW CONDUCTIVITY
FOR HUMIDIFIERS WITH IMMERSED ELECTRODES

				LIMITS	
				Min.	Max
Hydrogenions Activity	pH	-		7	8,5
Specific conductivity at 20°C	σR 20 °C	-	µS/cm	125	500
Total dissolved solids	TDS	-	mg/l	(1)	(1)
Fixed Residual at 180°C	R_{180}	-	mg/l	(1)	(1)
Total hardness	TH	-	mg/l $CaCO_3$	50(2)	250
Temporary hardness		-	mg/l $CaCO_3$	30(3)	150
Iron + Manganese		-	mg/l Fe+Mn	0	0,2
Chlorides		-	ppm Cl	0	20
Silicon Dioxide		-	mg/l SiO_2	0	20
Residual Chloride		-	mg/l Cl	0	0,2
Anhydrite		-	mg/l $CaSO_4$	0	60
Metallic matters		-	mg/l	0	0
Solvents, diluents,soaps, lubricants		-	mg/l	0	0

(1) Values depending on the specific conductivity; generally speaking: TDS~= 0,93 * σ 20; R_{180}~=0,65 * σ 20

(2) Not less than 200% of chlorides content in mg/l of Cl

(3) Not less than 300% of chlorides content in mg/l of Cl

Warning: there exists no reliable relation between hardness and conductivity of water.

Do not treat water with softeners! They can cause electrodes corrosion and generate foam, thus involving troubles of irregular functioning.

It is not advisable:

- To employ well water, industrial water, process water coming from the cooling circuits or contaminated water with chemical or bacteriological substances;
- To employ supply water containing disinfectants or anticorrosion compounds because they are potentially irritant.

2.3 Startup, check and stop

Before the startup, make sure the humidifier is in perfect condition, there are no water leakages and the electric parts are dry.

Do not give power, if the unit is damaged or partially wet!

Once the installation is completed, purge the supply water pipe for about 30 minutes letting water flow directly to the drainage line without entering the humidifier; this will help eliminate any remains or installation debris which could clog the drainage valve and cause foam generation during boiling.

Before starting the unit, it is advisable to eliminate the PE film around the pipe to allow a correct heat exchange (the film is part of the pipe packing)

2.3.1 Preliminary checks

Before starting the humidifier, it is necessary to check the following:

- Hydraulic and electric connections and the steam distribution system must be performed according to the instructions described in this handbook
- The water shut-off valve on humidifier must be opened;
- The line fuses must be installed and they must not be damaged;
- Terminals AB of control CP4 must be jumpered or must be connected to the remote ON/OFF contact and the latter must be closed;
- The steam outlet pipe must not present any choking.

2.3.2 Startup with vacuum cylinder

This phase is performed automatically as soon as the humidifier starts: before obtaining the nominal steam production, it is necessary to wait for an adequate period of time which mainly depends on the supply water conductivity and it may also take a few hours.

3 - SETTING

The control CP4 is a microprocessor electronic card which is installed on the unit electric board when Emiro microprocessor is used.

CP4 card is not present in case Emiplus microprocessor is installed, since CP4 functions are already integrated in Emiplus software. In this case, for humidifier setting, refer to the attached microprocessor manual.

The unit contains powered electric parts.
Before acceding to the inside parts, disconnect the unit from the power supply.

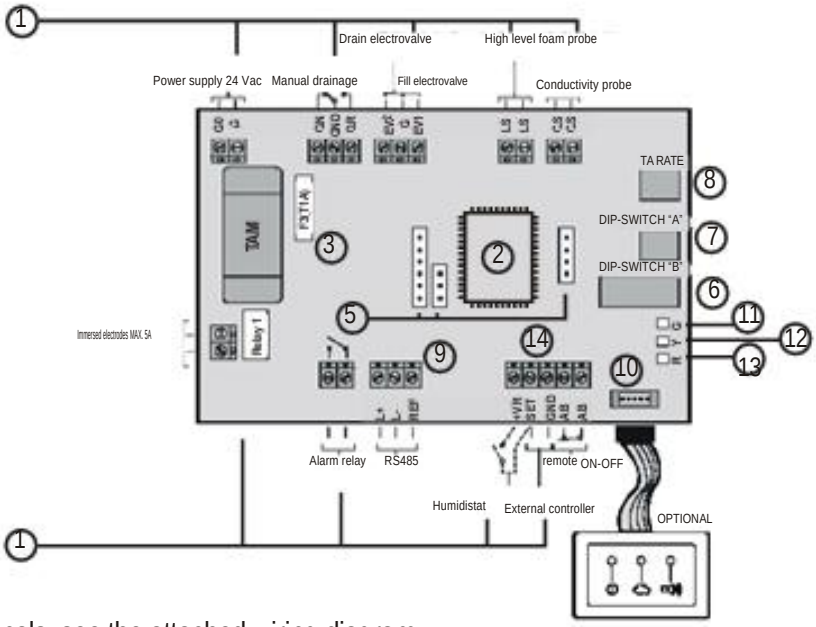

3.1 Electric parts

1 - Connection terminals: see the attached wiring diagram.

2 - Configuration microprocessor: it is the component where the humidifier operating data are memorized.

3 - 2A fuses.

4 - TAM: amperometric transformer. Its function is to detect the humidifier absorbed current during the steam production phase.

5 - Combs: see the attached wiring diagram.

3.2 Dip-switch

6 - Dip-switch B: it is used for auxiliary functions and to set the automatic drainage time. It is set up from the manufacturer.

7 - Dip-switch A: it is used to set the alarm relay (usually closed) and the maximum steam production. It is set up from the manufacturer.

8 - TA rate: used to set TAM transformation rate. It is set up from the manufacturer.

3.3 Connectors

9 - It allows the connection to the serial interface RS485.

10 - It allows the connection to the remote display (if present)

3.4 Led

11 - Green: is switched on when the electronic card is powered correctly.

12 - Yellow: it is switched off when steam is not produced, while it is permanently switched on when at 100% of its nominal production. During the transitory production it winks at a frequency of 2 Hz. Once the nominal production is achieved it winks at a frequency of 0,5 Hz. A series of pulses is generated: each train of pulses is separated from the following train by means of a 3-seconds pause: by counting the number of pulses it is possible to determine the steam production in that moment.

13 - Red: in absence of alarms it is off; according to the type of alarm activated it emits short flashings (frequency of 2 Hz) or long flashings (frequency of 0,5 Hz); all trains of pulses are separated one from the other by a 3-seconds pause.

3.5 Digital terminals

14 - AB - AB remote ON-OFF activation..

3.6 Wiring diagram for single phase humidifier

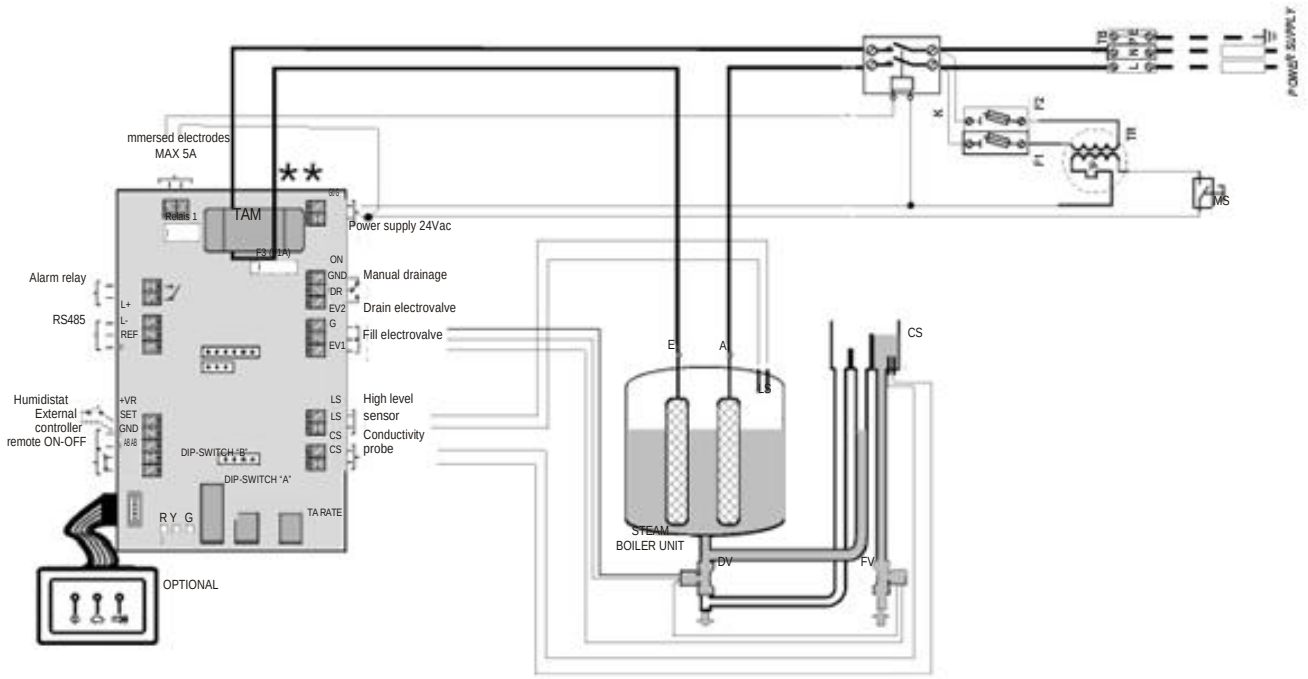

3.7 Wiring diagram for three-phase humidifier

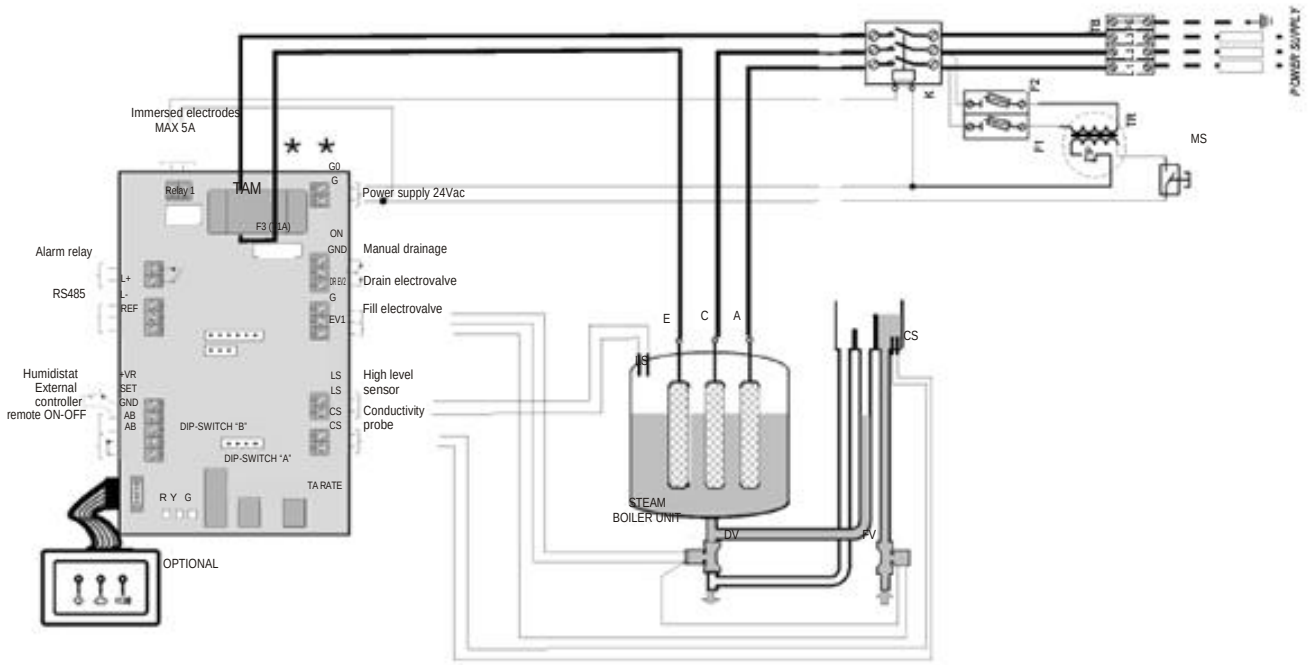

EMICON
AIR CONDITIONING AND INDUSTRIAL APPLICATION

3.8 Types of alarms

TYPE	DESCRIPTION	RE-START (if what caused the alarm has been corrected)	RED LED	ALARM RELAY
Stop	The card stops the humidifier	Manual: to re-start, switch on and switch off the card	Alarm codes: each code is displayed in sequence. Codes are displayed even if the alarm causes have been eliminated: to cancel the codes display, switch off and then switch on the card or send a reset order via RS 485	SPST relay, usually closed according to DIP A setting. The relay action is cumulative: • The contact is open in presence of at least 1 alarm and AB-AB closed; • the contact is closed when: - all alarm causes have been eliminated; - all alarms have been cancelled, both manually and automatically, or when AB-AB is open**.
Disabled	The card stops the humidifier	- Automatic - Manual: to re-start, switch on and switch off the card or t send a reset order via RS485*.		
Pre - alarm	The card does not stop the humidifier	automatic		

(*) Check in the following table the automatic-restart alarms and the manual-restart alarms.
(**) Not all alarms are associated to the relay (check the following table)

3.9 Alarms description

Red LED flashings	Description and possible causes	Corrective action	Alarm		
			Type	Reset	Alarm relais
2 short flashings	Overcurrent at the electrodes: 1. water conductivity too high (usually when the unit restarts after a short stop) 2. high water level caused by a drain valve malfunction 3. high water level caused by a fill valve leakage 4. electrodes malfunction	1. drain some water and re-start 2. check the discharge valve operates properly 3. check possible leakage of the fill valve when not energised	stop	manual	active
3 short flashings	No current at the electrodes: when the humidifier is on, no steam is produced	1. check the external control signal: type (V or mA)? Value?Connections? 2. switch off the unit and disconnect the internal connections	stop	manual	active
4 short flashings	Internal memory error	1. download the appropriate configuration by means of Humiset 2. if the problem persists, contact CAREL customer service	stop	manual	active
5 short flashings	High supply water conductivity	1. check the threshold set with the parameter via RS485 2. switch off the unit and clean the conductivity probe electrodes 3. if the problem persists, change the supply water source or install a suitable treatment system (demineralisation, even only partially) N.B.: the problem cannot be solved by softening the supply water .	stop	manual	active
2 long flashings	Cylinder depleted	Perform the maintenance and/or replace the cylinder	signal	manual	Not affected
3 long flashings	No supply water	1. make sure the charge pipe to the humidifier and the internal pipe are not blocked or bended and supply pressure is sufficient (0.1/0.8 MPa) 2. Check the fill valve operates properly 3. check the counter pressure in steam outlet hose does not exceed the maximum limit, preventing the supply water from flowing into the cylinder by gravity 4. check the steam outlet hose is not clogged and there is no condensate	disabled	manual	active
4 long flashings	Excessive reduction in production	Cylinder completely depleted or excessive foam. Carry out the cylinder maintenance.	disabled	manual	active
5 long flashings	Drain malfunctioning	Check the drain circuit and the correct operation of the drain valve	disabled	manual	active
6 long flashings	User parameters error	1. download the appropriate configuration by means of Humiset 2. if the problem persists, contact CAREL customer service	stop	manual	active
7 long flashings	Pre-alarm of high water supply conductivity	1. check the water supply conductivity 2. check the limit set by parameter b5 via RS485 3. if needed, install an appropriate demineralisaton system N.B.: the problem cannot be solved by softening the supply water.	signal	Display, automatic reset	Not affected
8 long flashings	Control signal not correctly connected (only 0/10V)	1. check the connection to the external controller 2. check the setting of parameters A0 and A2 via RS485	disabled	Alarm: Automatic Display: manual	active
9 long flashings	Full cylinder with no production	With the humidifier OFF: 1. check between the fill valve filaments and the condensate return pipe 2. check the level sensors are clean	disabled	manual	active
10 long flashings	Foam	Foam is generally caused by surface-active agents container in water (lubricants, solvents, detergents, agents for water treatment, softeners) or by an excessive concentration of dissolved salts: 1. drain and clean the supply water pipes 2. clean the cylinder 3. check the presence of softeners (in this case employ a diffferent type of supply water or reduce the softening)	signal	Display, manual reset	not affected
11 long flashings	Cylinder almost completely depleted	Carry out the maintenance and/or replace the cylinder	signal	Display, manual reset	Not affected
RS 485	Hour counter error	Switch off the humidifier and make sure there is no defective electric connection or damage, then clear the hour counter via RS485	signal	only via RS485	Not affected

EMICON AIR CONDITIONING AND INDUSTRIAL APPLICATION

4 - GENERAL MAINTENANCE

The routine maintenance operations refer to the steam cylinder replacement and to the yearly unit cleaning.

Before starting any maintenance operation, disconnect the humidifier power supply.

4.1 Steam cylinder replacement

This operation is necessary when the electrodes active surface is so encrusted as to impede a sufficient current flow. When this situation occurs, an alarm is activated from the control card.

The cylinder might be hot. Leave it cool down before touching it or wear gauntlets.

How often this operation must be done depends on the supply water quality and on the operating conditions. Anyway, it is recommended to replace the cylinder at least every 5 years or after 10,000 hours of operation.

To replace the cylinder, it is necessary to:

- Drain completely the water contained into the cylinder;
- Disconnect the unit power supply by means of the main switch or the line fuses;
- Take the steam pipe off the cylinder;
- Diconnect the electric connections on main electrodes and take the plugs off the level electrodes;
- Unblock the cylinder from the fixing system and lift it to remove it;
- Install the new cylinder on the humidifier, performing the previous operations in reverse order.

4.2 Periodical checks

After one hour of operation:

- Make sure there is no significant water leakage.

Every 15 days or no more than 300 operating hours:

- Check operation, the absence of significant water leaks, the general humidifier conditions. Make sure during operation there is no arc or spark between the electrodes.

Every three months or no more than 1000 operating hours:

Check operation, the absence of significant water leaks, and replace the cylinder if necessary

In case of leakage, disconnect the humidifier from the power supply before touching the cylinder.

4.3 Unit cleaning

The unit must be checked and cleaned yearly. It is advisable to do it in summer when the unit stops working.

☞ Do not employ detergents or solvents to clean plastic components.

☞ Descaling washings can be carried out with a solution containing 20% of vinegar or acetic acid, then rinse with water..

After taking the boiler cylinder off, the following operations must be performed:

- After disconnecting the wirings and the pipes, remove the fill solenoid valve and check if the inlet filter needs any cleaning. If needed, wash the filter with water and a soft brush.
- Remove the drain pump and check there are no deposits in the cylinder connection and remove, if it is the case, the impurities. Make sure the O-ring seal is not damaged or cracked and replace it if necessary.
- Disconnect the drain valve from the power supply, unscrew the collector, remove the coil and dismantle the valve body, remove any impurities and rinse with water.
- Make sure there are no clogging up or solid particles in the fill tank and check the conductivity electrodes are clean; remove any impurities and rinse with water.
- Check the inlet supply water pipes, the fill water pipes and the overflow pipes. No debris must be present. If it is the case, remove them and rinse with water

☞ After replacing or checking the hydraulic parts, check the connections have been carried out correctly. Re-start the unit and execute a number of fill and drain cycles (from 2 to 4). Once the cycles are completed, check there are no water leaks by employing the safety procedure

☞ When stopping the unit for a certain period, empty the steam cylinder completely

5 - TROUBLESHOOTING

TROUBLE	POSSIBLE CAUSE	CORRECTIVE ACTION
Humidifier cannot start	No power supply	check the protection upstream the humidifier and check if there is power supply
	Controller connectors are not plugged correctly	make sure the connectors are plugged properly in the terminal board
	Fuses interrupted	check fuses F1/F2/F3
	Damaged transformer	check that on secondary side of transformer there are 24 VAC
Humidifier does not work	Remote ON/OFF contact open (relay/terminals AB- AB) on control CP4	close ON/OFF contacts (relay/terminals AB- AB) on control CP4
	Control signal not compatible with the set signal	make sure the external signal is 0-10V
Humidifier fills water without producing steam	Too high counter pressure into steam outlet hose	check the steam outlet hose has no bending or choking
	Clogged inlet cylinder filter	clean the filter
	Limestone deposit in the fill tank	wash the fill tank
	Malfunctioning of the drain electrovalve	check if any irregular presence of 24 Vac on drain electrovalve and/or replace the drain electrovalve
The line magnetothermic switch is activated	The magnetothermic switch is undersized	make sure the magnetothermic switch is oversized for a current value equivalent to at least 1,5 times the humidifier nominal current value
	Overcurrent at the electrodes	check the drain electrovalve operation, the fill electrovalve tightness when it is not excited, drain some water and restart.
Humidifier wets into the duct	The system is oversized	reduce the steam production set on the electronic card
Humidifier wets the floor	The supply hydraulic circuit or the overflow circuit is leaking	check the entire hydraulic circuit
	The steam outlet hose is not fixed properly to the cylinder	Check the steam outlet hose is well fixed

☞ For troubles reported by the electronic card CP4 alarms, see par. 3.8

6 - DISMANTLING

The unit is made of plastic and metal parts.

Do not release these parts in the environment, but dispose them in compliance with local laws in force.

EMICON
AIR CONDITIONING AND INDUSTRIAL APPLICATION

SINCERT
CERMET

Registrazione n.048
UNI EN ISO 9001:2000
UNI EN ISO 14001:2004

DICHIARAZIONE CE DI CONFORMITÀ
EC DECLARATION OF CONFORMITY
CE-KONFORMITÄTSERKLÄRUNG
DECLARATION CE DE CONFORMITÉ

Il Fabbricante | *The Manufacturer* | *Der Hersteller* | *Le Fabricant*

EMICON A.C. S.P.A.
via A. Volta, 49
47014 Meldola (FC)
tel. (+39) 0543/495611
fax. (+39) 0543/495612
e-mail emicon@emiconac.it

DICHIARA | ***DECLARES*** | ***ERKLÄRT*** | ***DECLARE***

che la macchina | *that the machinery* | *daß die Einheit* | *que l'unitè*

Modello | **Model** | **Modell** | **Modèle** _____

Matricola | **Serial Nr.** | **Seriennr.** | **N.ro de série** _____

è conforme a tutte le disposizioni pertinenti delle direttive | *fulfils all the relevant provisions of the directives* | *den folgenden Vorschriften entspricht* | *est conforme aux dispositions*

2004/108/EC | **2006/42/EC** | **2006/95/EC**

in quanto è stata progettata, costruita e collaudata in accordo con le seguenti Norme | *because it has been designed, manufactured and tested according to the following Standards* | *da sie in Überstimmung mit den folgenden Normen geplant gebaut und getestet wurde* | *étant l' appareil conçu, réalisé et testé dans le respect des normes suivantes*

EN 61000-6-1
EN 61000-6-2
EN 61000-6-3
EN 61000-6-4

EN ISO 12100-1
EN ISO 12100-2

EN 60204-1
EN 60335-1
EN 60335-2-40
EN 60439-1

AUTORIZZA | ***AUTHORISES*** | ***AUTORISIERT*** | ***AUTORISE***

Romano Santucci
via A Volta, 49
47014 Meldola (FC)

a costituirne il Fascicolo Tecnico. | *to compile its Technical File.* | *die technischen Unterlagen zu erstellen* | *à realiser le dossier technique.*

Meldola, ___/___/_____

Romano Santucci

Romano Santucci

Technical Manager

Emicon A.C. S.p.a. reserves the right to make changes to tis products without any prior notice

Emicon A.C. S.p.a. Via A.Volta 49 Meldola Tel. +39 0543 495611 Fax +39 0543 495612