Библиотека СОК

Instructions

VFG(S) 2(21,25), VFQ 2(21) DN 15 - 125

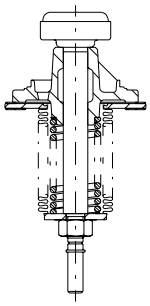

VFG(S) 2/21/25, VFQ 2/21

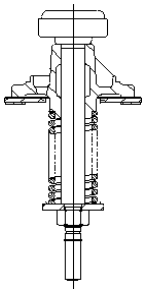

VFG 25

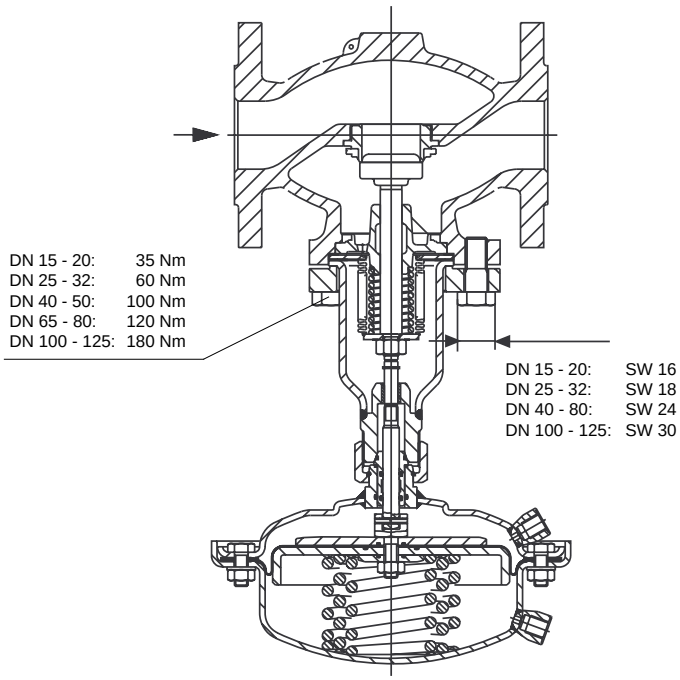

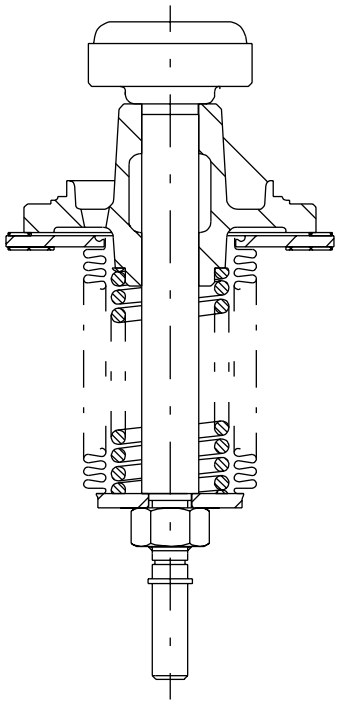

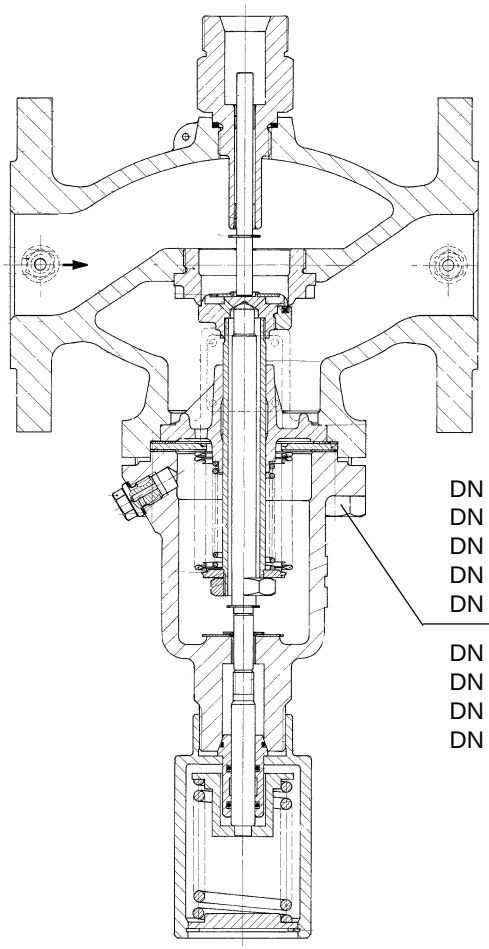

DN 15 - 20:	35 Nm
DN 25 - 32:	60 Nm
DN 40 - 50:	100 Nm
DN 65 - 80:	120 Nm
DN 100 - 125:	180 Nm

DN 15 - 20:	SW 16
DN 25 - 32:	SW 18
DN 40 - 80:	SW 24
DN 100 - 125:	SW 30