Библиотека СОК

Installation Guide

Service kits

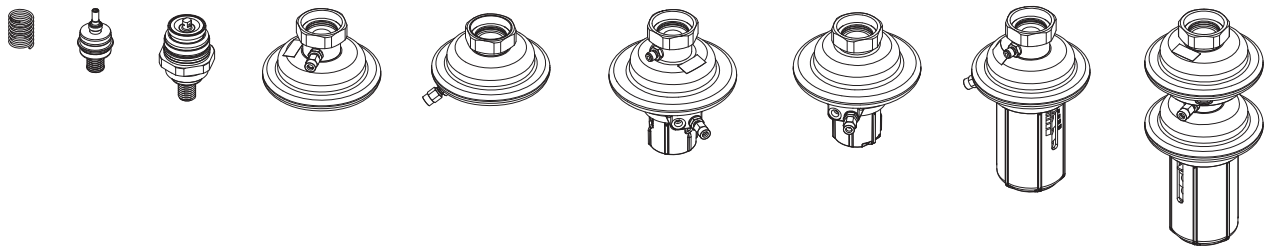

	PN	DN	Δp (bar) 0.05 ÷ 0.5 0.1 ÷ 0.5	0.2 ÷ 1.0	0.3 ÷2.0	0.8 ÷ 1.6	0.2	0.3	0.5	Code No.
A	16	15 ÷ 32	-	×		-	×	-	-	**003H1330**
			-	-		-	-	×	-	**003H1326**
			-	-		-	-	-	×	**003H1331**
			-	-		×	-	-	-	**003H1332**
	25	15 ÷ 50		-	-		×		-	**88835920**
		15 ÷ 25		-	-		-		×	**88835930**
		32 ÷ 50		-	-		-		×	**88835940**

	PN	DN	Δp$_b$ (bar) 0.1 ÷ 0.5	0.2 ÷ 1.0	0.3 ÷2.0	0.8 ÷ 1.6	0.2	0.3	0.5	Code No.
B	16	15 ÷ 32					×			**003H1330**
	25	15 ÷ 25					×			**88835920**
		32 ÷ 50					-			-

M1	CuSn5ZnPb (Rg5)
M2	EN-GJS-400-18-LT (GGG 40.3)

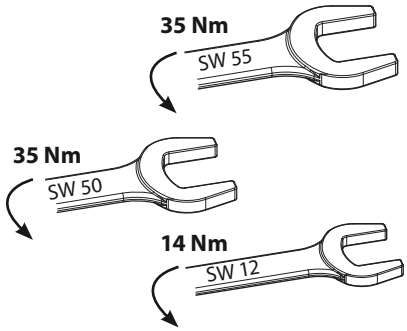

2	PN 25	AVP, AVP-F, AVPB, AVPB-F, AVPBT-F, AVD, AVQ, AVQT, AVQM, AVQMT	M1
2	PN 25	AVP, AVP-F, AVPB, AVPB-F, AVPBT-F, AVD, AVQ, AVQT, AVQM, AVQMT	M2
3	PN 25	AVPQ, AVPQ-F	M1
3	PN 25	AVPQ, AVPQ-F	M2
4	PN 25	AVPQ 4, AVPQ 4-F	M1
4	PN 25	AVPQ 4, AVPQ 4-F	M2
5	PN 25	AVPA	M1
5	PN 25	AVPA	M2

PN 25	AVP, AVP-F, AVPB, AVPB-F, AVPBT-F, AVD	A	M1
	AVQ, AVQT, AVQM, AVQMT	B	

PN 25	AVP, AVP-F, AVPB, AVPB-F, AVPBT-F, AVD	M2
	AVQ, AVQT, AVQM, AVQMT	

1

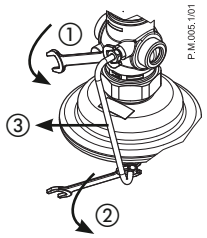

2

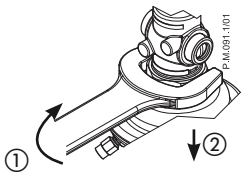

1

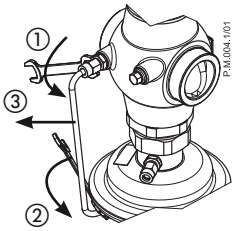

2

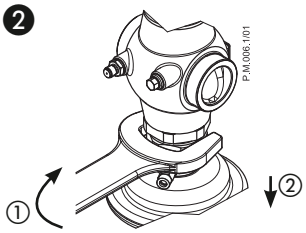

3

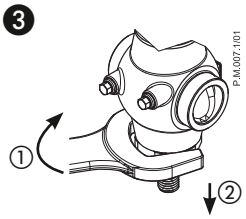

3

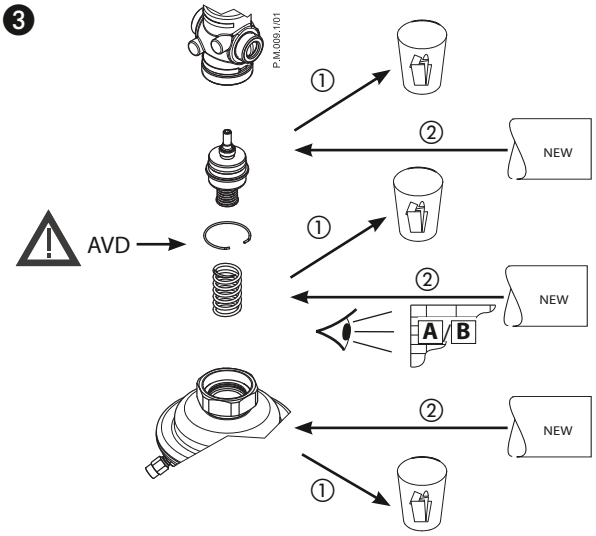

4

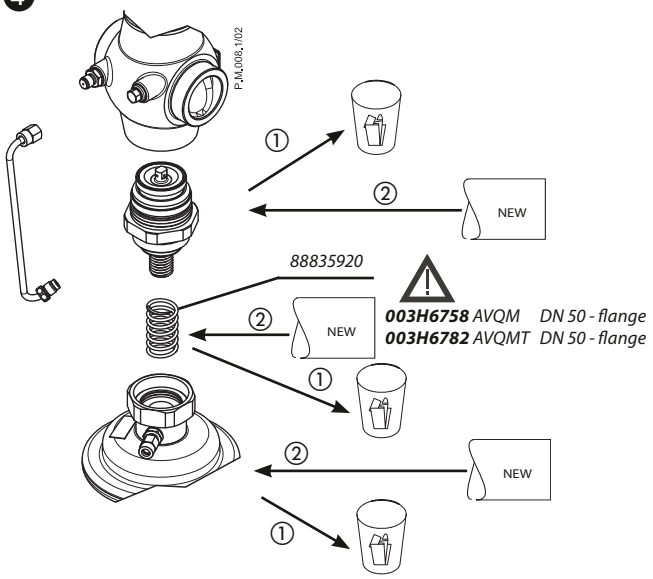

003H6758 *AVQM DN 50 - flange*
003H6782 *AVQMT DN 50 - flange*

5

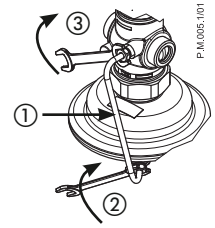

4

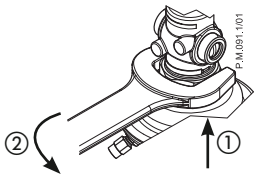

7

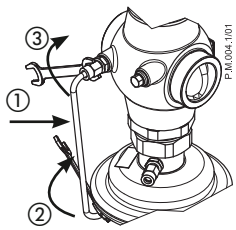

5

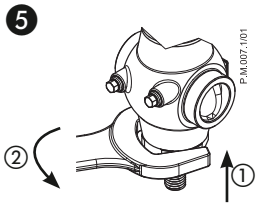

6

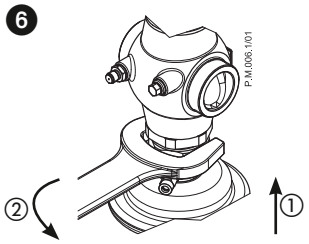

PN 25	AVPQ, AVPQ-F	B	M1

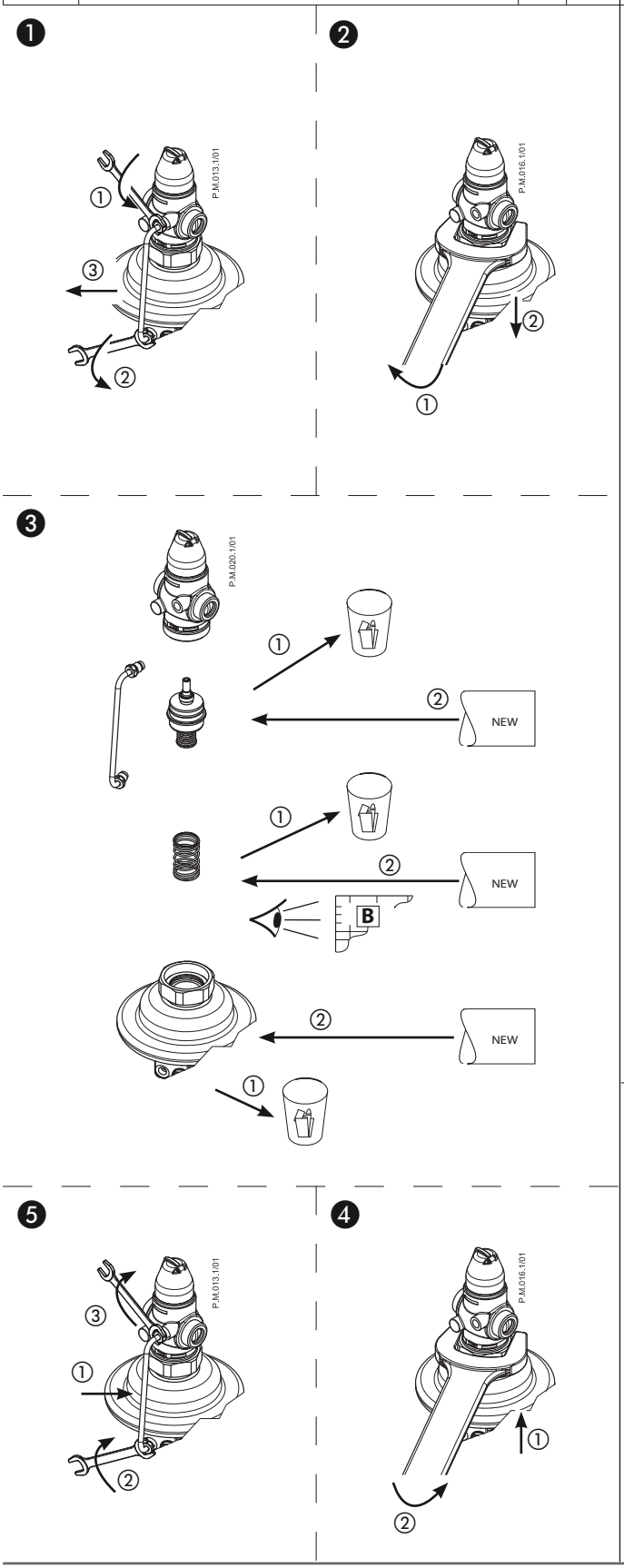

PN 25	AVPQ, AVPQ-F	M2

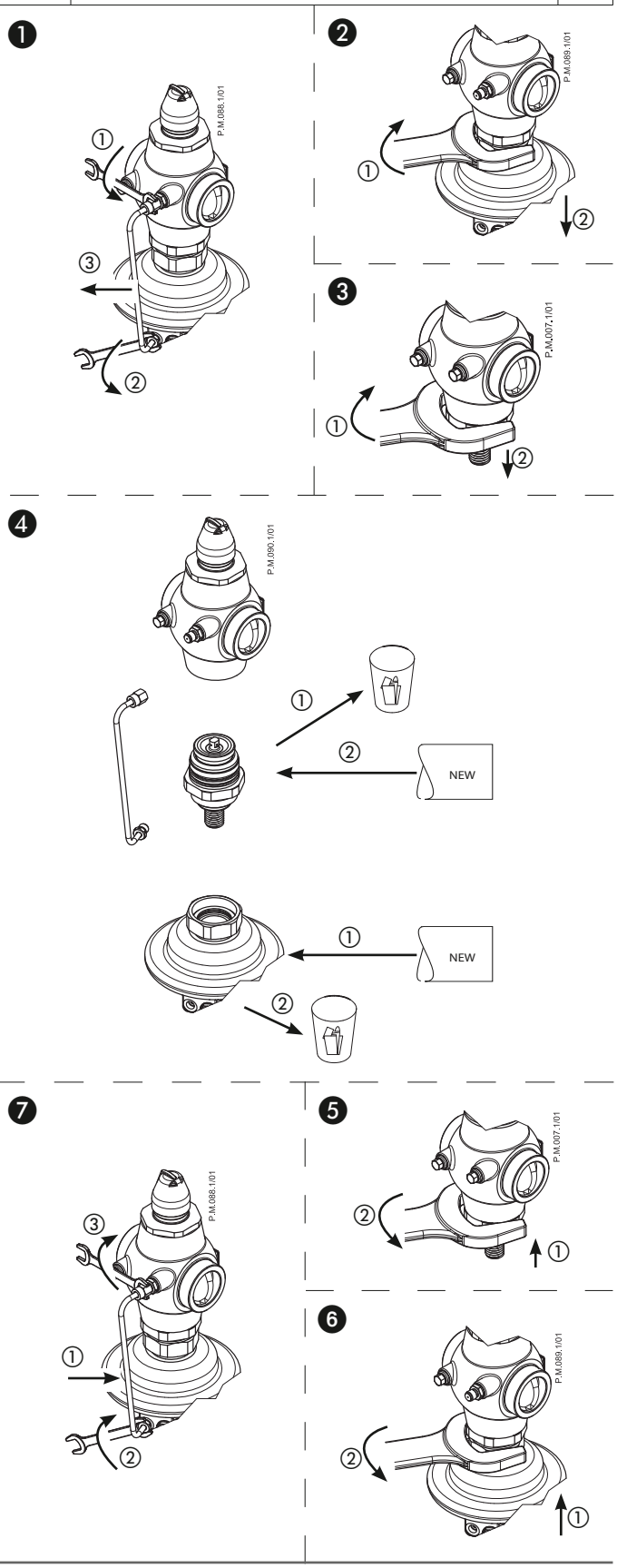

PN 25	AVPQ 4, AVPQ 4-F		B	M1

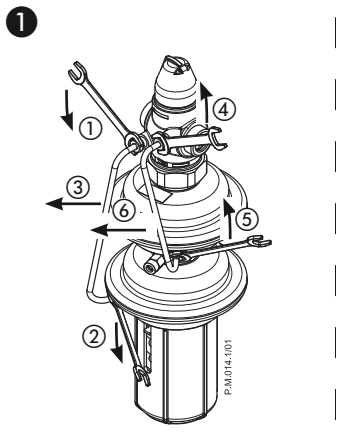

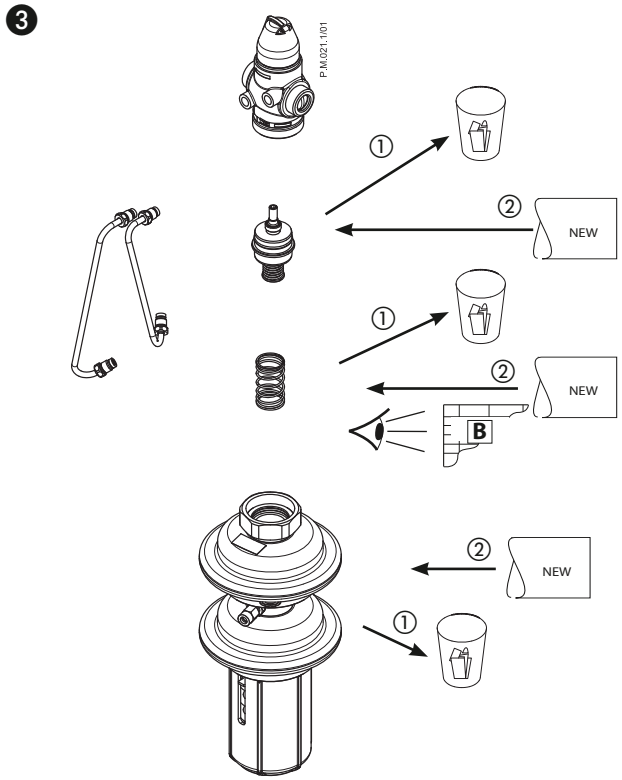

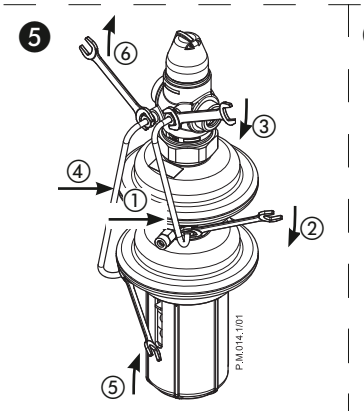

PN 25	AVPQ 4, AVPQ 4-F	M2

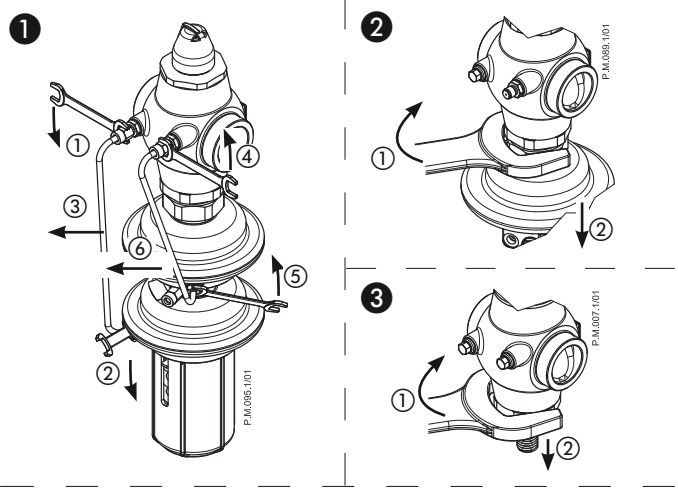

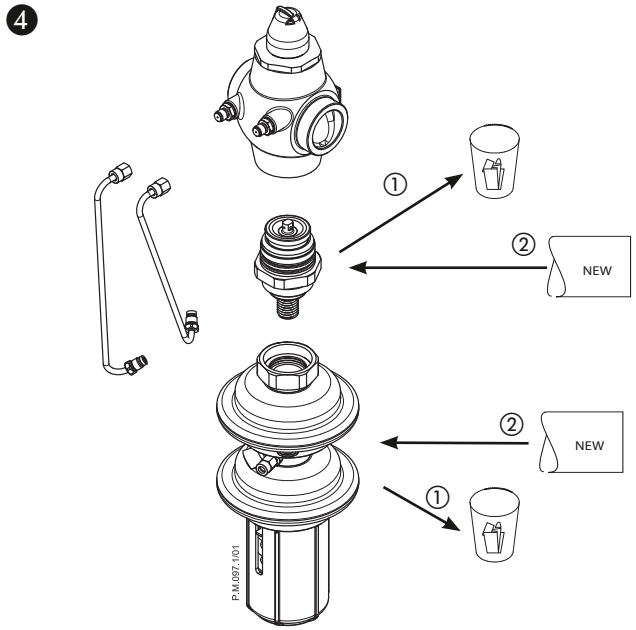

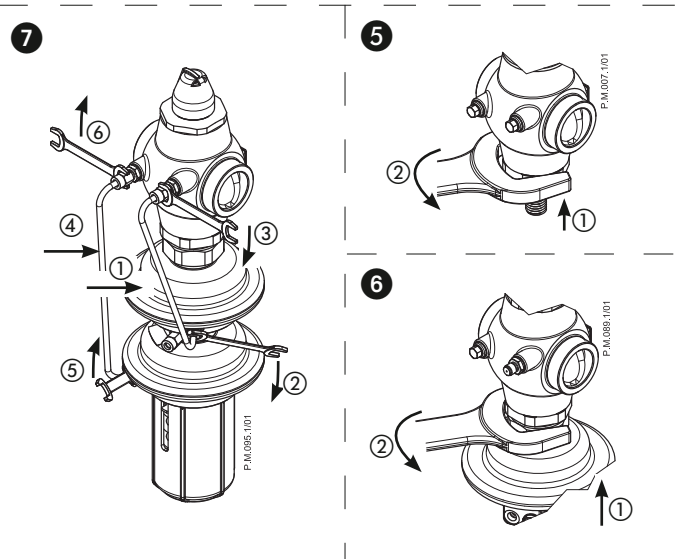

PN 25	AVPA	M1

❶

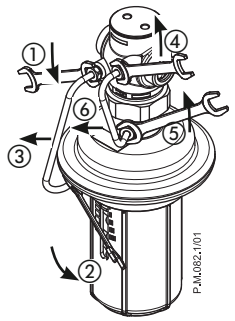

❷

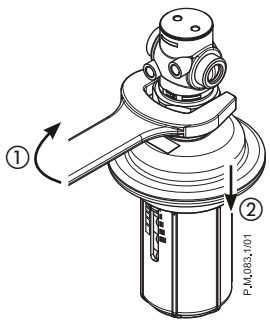

❸

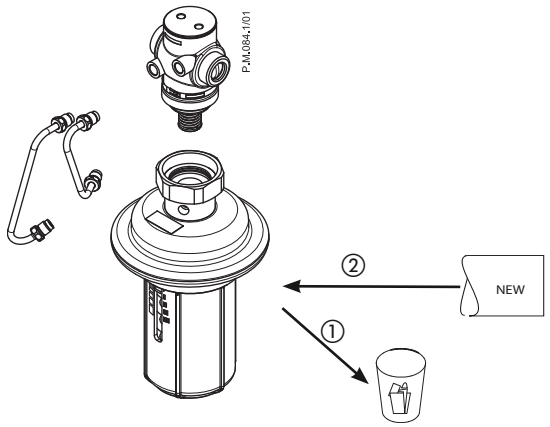

❺

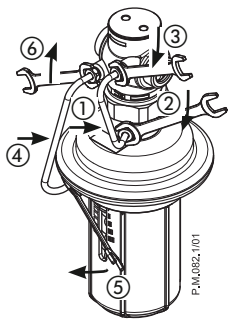

❹

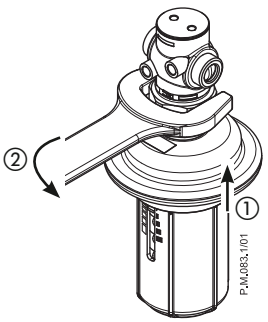

PN 25	AVPA	M2

❶

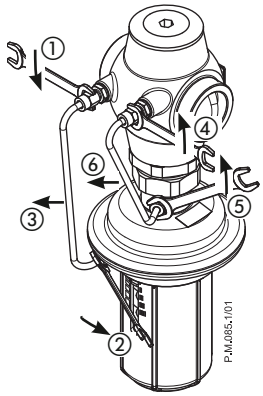

❷

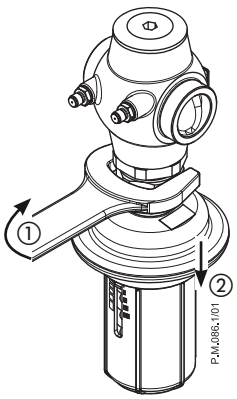

❸

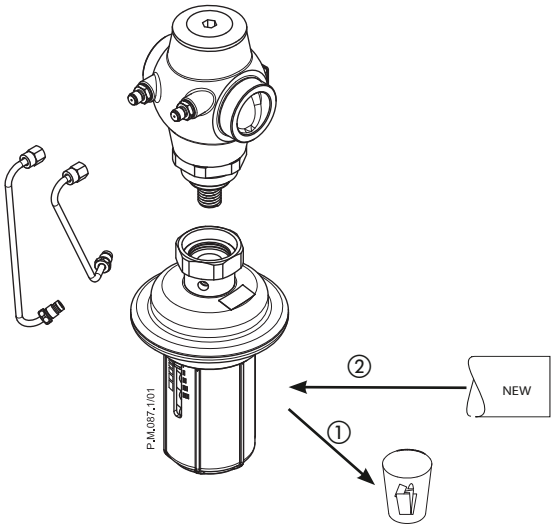

❺

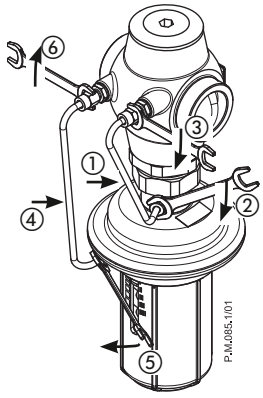

❹

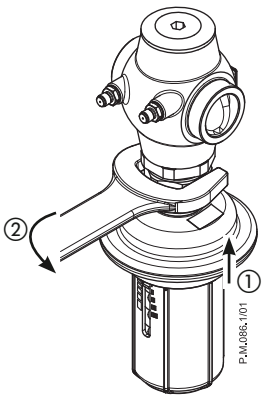

Danfoss can accept no responsibility for possible errors in catalogues, brochures and other printed material. Danfoss reserves the right to alter its products without notice. This also applies to products already on order provided that such alterations can be made without subsequential changes being necessary in specifications already agreed.
All trademarks in this material are property of the respective companies. Danfoss and the Danfoss logotype are trademarks of Danfoss A/S. All rights reserved.

Produced by Danfoss A/S © 03/2012