Библиотека СОК

Instructions
Accessories – Catalogue

2

❶	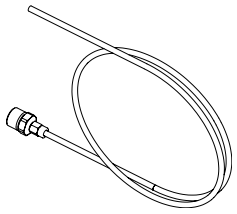	R ⅛	003H6852		SW 12 (14 Nm)	SW 10
		R ⅜	003H6853		SW 12 (14 Nm)	SW 17
		R ½	003H6854		SW 12 (14 Nm)	SW 22
		–	003H6860		SW 12 (14 Nm)	SW 12 (14 Nm)
❷		G ⅛	003H6931		SW 12 (14 Nm)	SW 14
			003H6932			
❸		R ⅛	003H6857		SW 12 (14 Nm)	SW 10
		R ⅜	003H6858		SW 12 (14 Nm)	SW 17
		R ½	003H6859		SW 12 (14 Nm)	SW 22

4

A



B



DN (mm)	EN 10226-1
15	G ¾
20	G 1
25	G 1¼
32	G 1 ¾

C

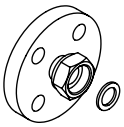

A B C

DN (mm)	SW (mm)
15	32
20	41
25	50
32	63

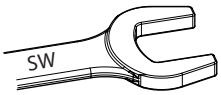

5

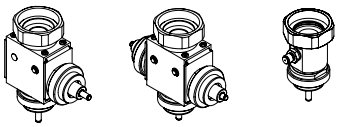

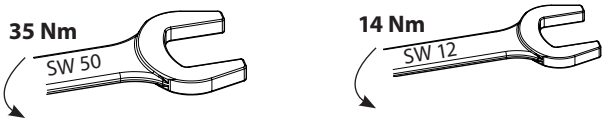

7

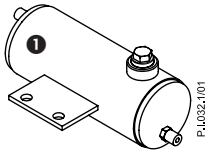

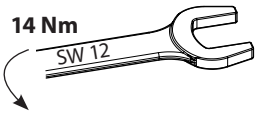

8



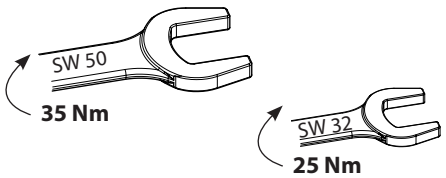

VI.CX.A1.00 © Danfoss 04/2008

❶	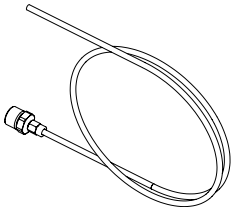	R ⅛	003H6852		SW 12 (14 Nm)	SW 10
		R ⅜	003H6853		SW 12 (14 Nm)	SW 17
		R ½	003H6854		SW 12 (14 Nm)	SW 22
		–	003H6860		SW 12 (14 Nm)	SW 12 (14 Nm)
❷		G ⅛	003H6931		SW 12 (14 Nm)	SW 14
			003H6932			
❸		R ⅛	003H6857		SW 12 (14 Nm)	SW 10
		R ⅜	003H6858		SW 12 (14 Nm)	SW 17
		R ½	003H6859		SW 12 (14 Nm)	SW 22

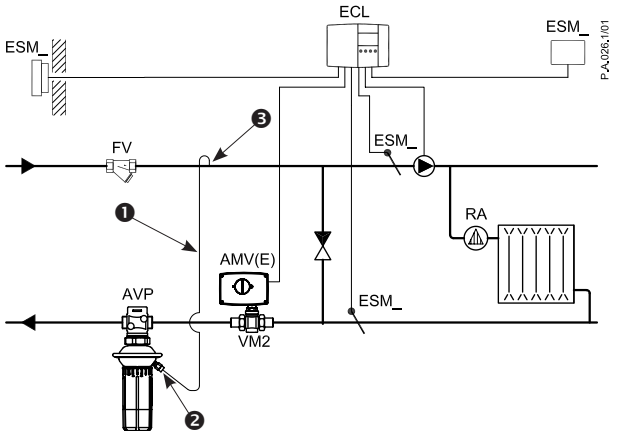

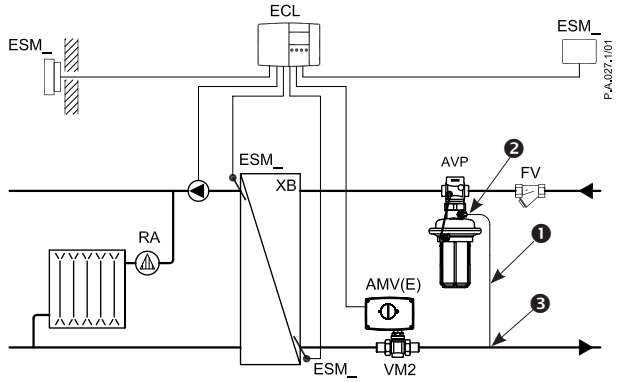

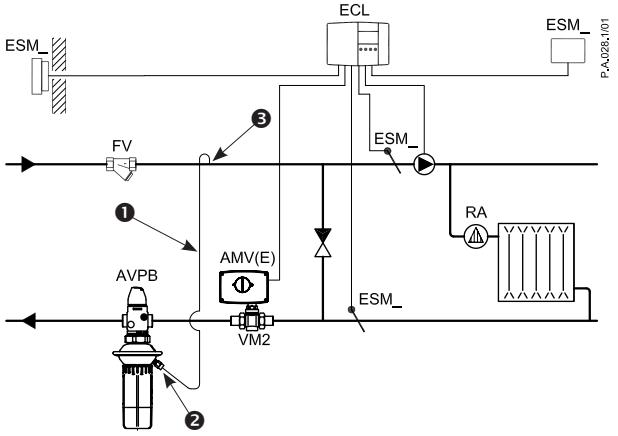

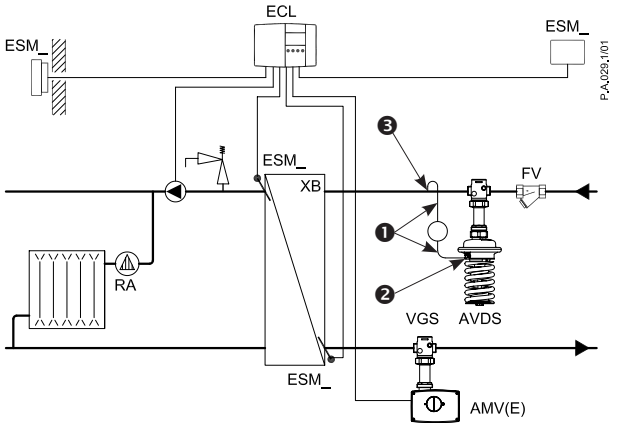

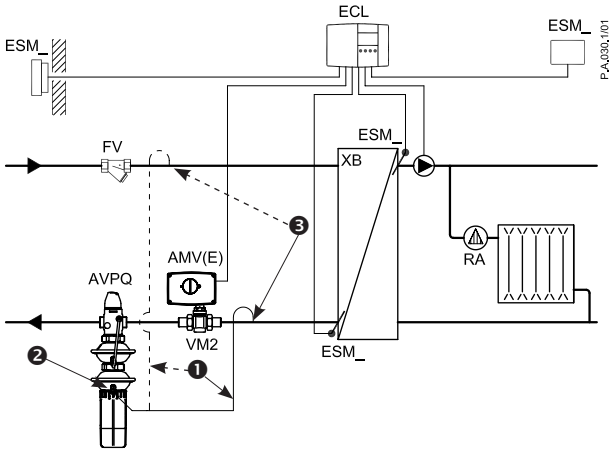

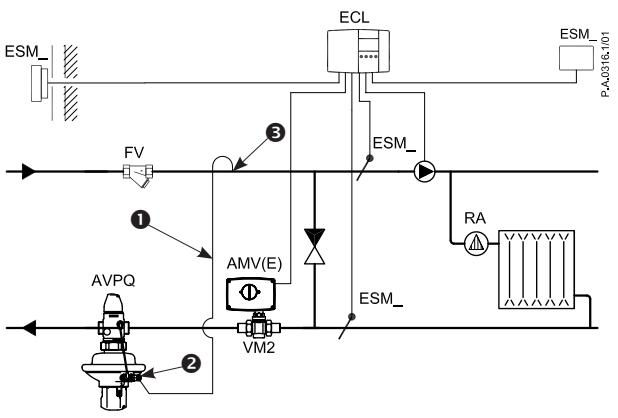

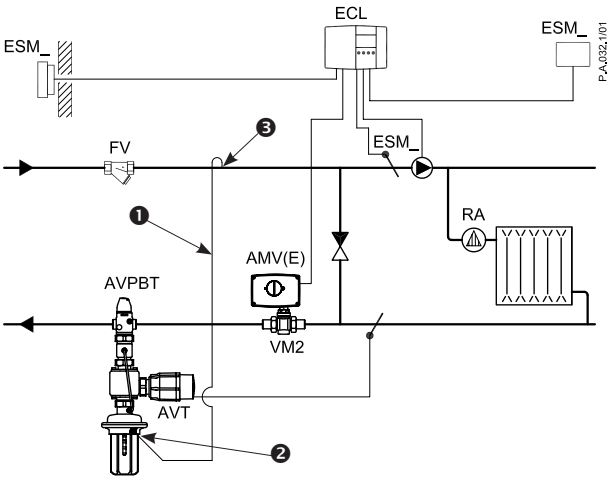
ECL
ESM_
ESM_
P-A_032.1/01
FV
ESM_
RA
AMV(E)
AVPBT
VM2
AVT

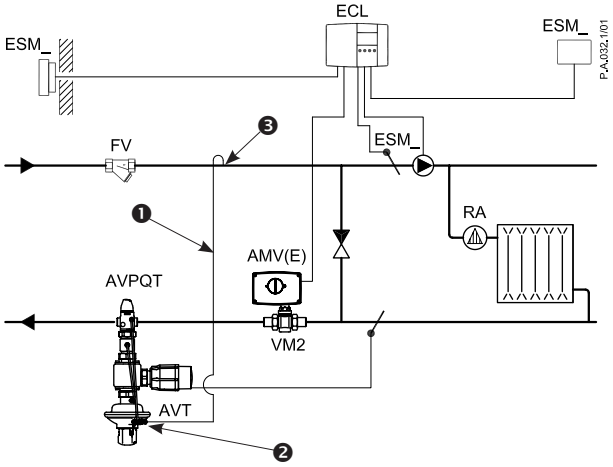
ECL
ESM_
ESM_
P-A_032.1/01
FV
ESM_
RA
AMV(E)
AVPQT
VM2
AVT

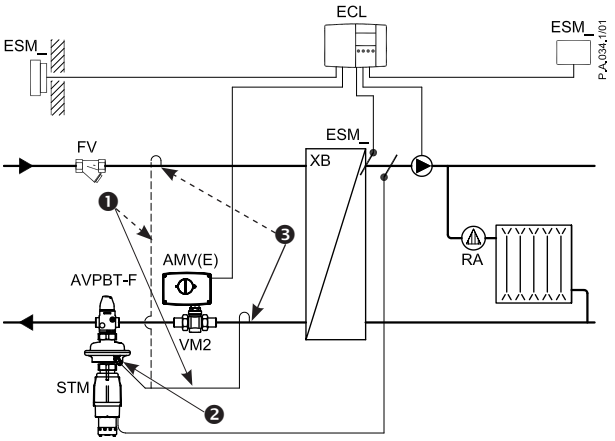
ECL
ESM_
ESM_
P-A_034.1/01
FV
ESM_
XB
RA
AMV(E)
AVPBT-F
VM2
STM

A

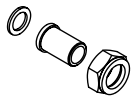

B

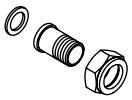

DN (mm)	EN 10226-1
15	G ¾
20	G 1
25	G 1¼
32	G 1 ¾

C



A B C

DN (mm)	SW (mm)
15	32
20	41
25	50
32	63

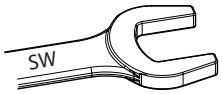

A

1

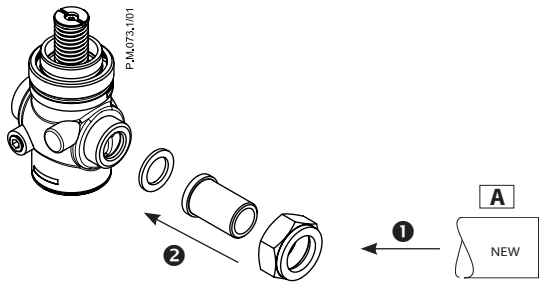

2

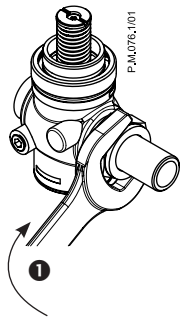

B

1

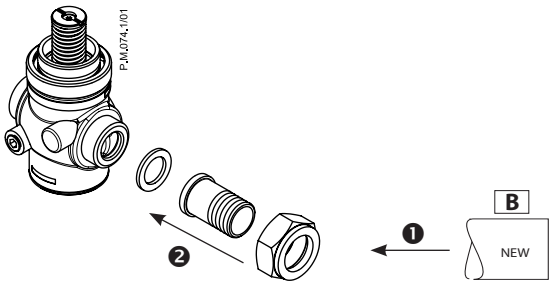

2

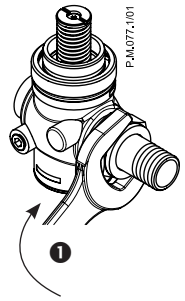

C

1

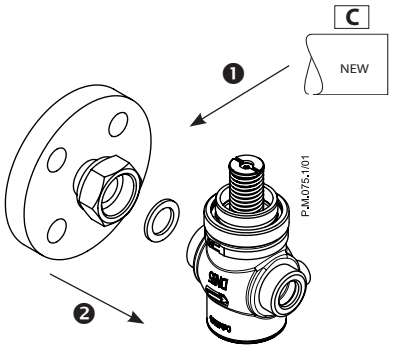

2

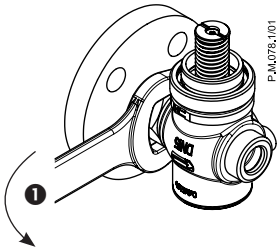

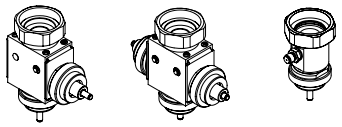



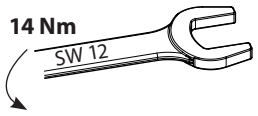

AVPBT/AVT, AVPBT/STM

1

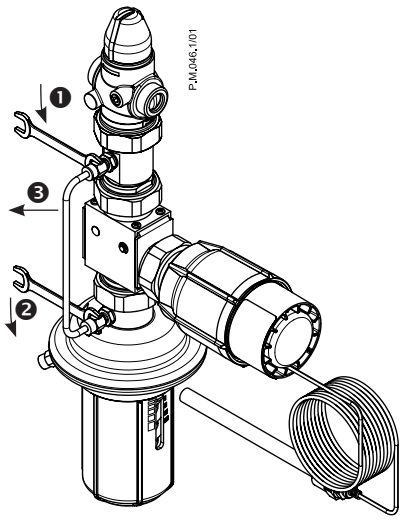

2

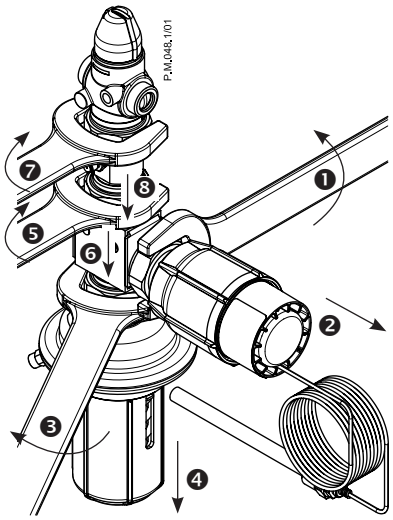

3

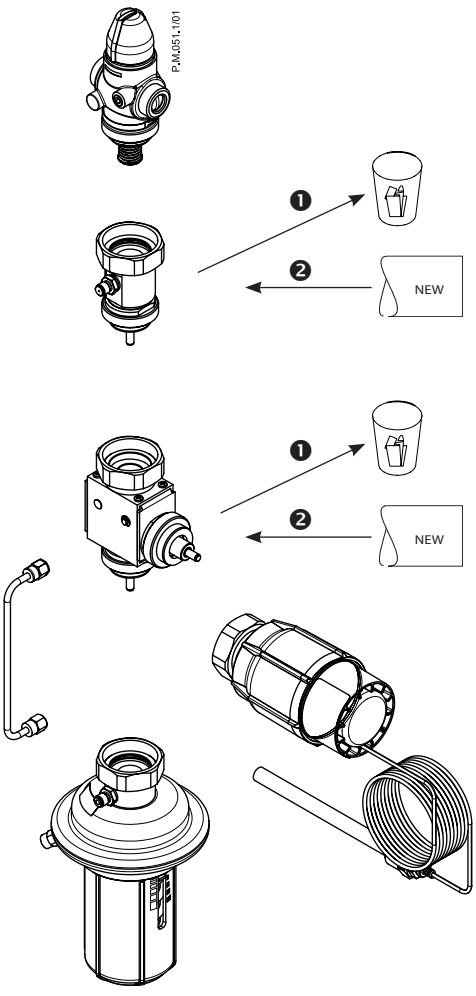

5

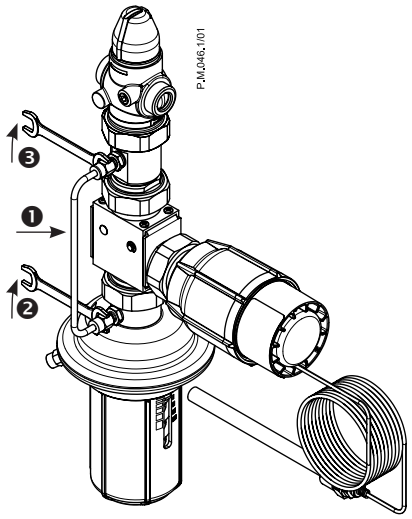

4

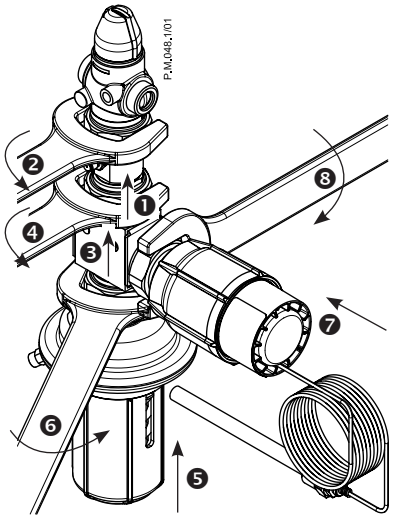

AVPQT/AVT, AVPQT/STM

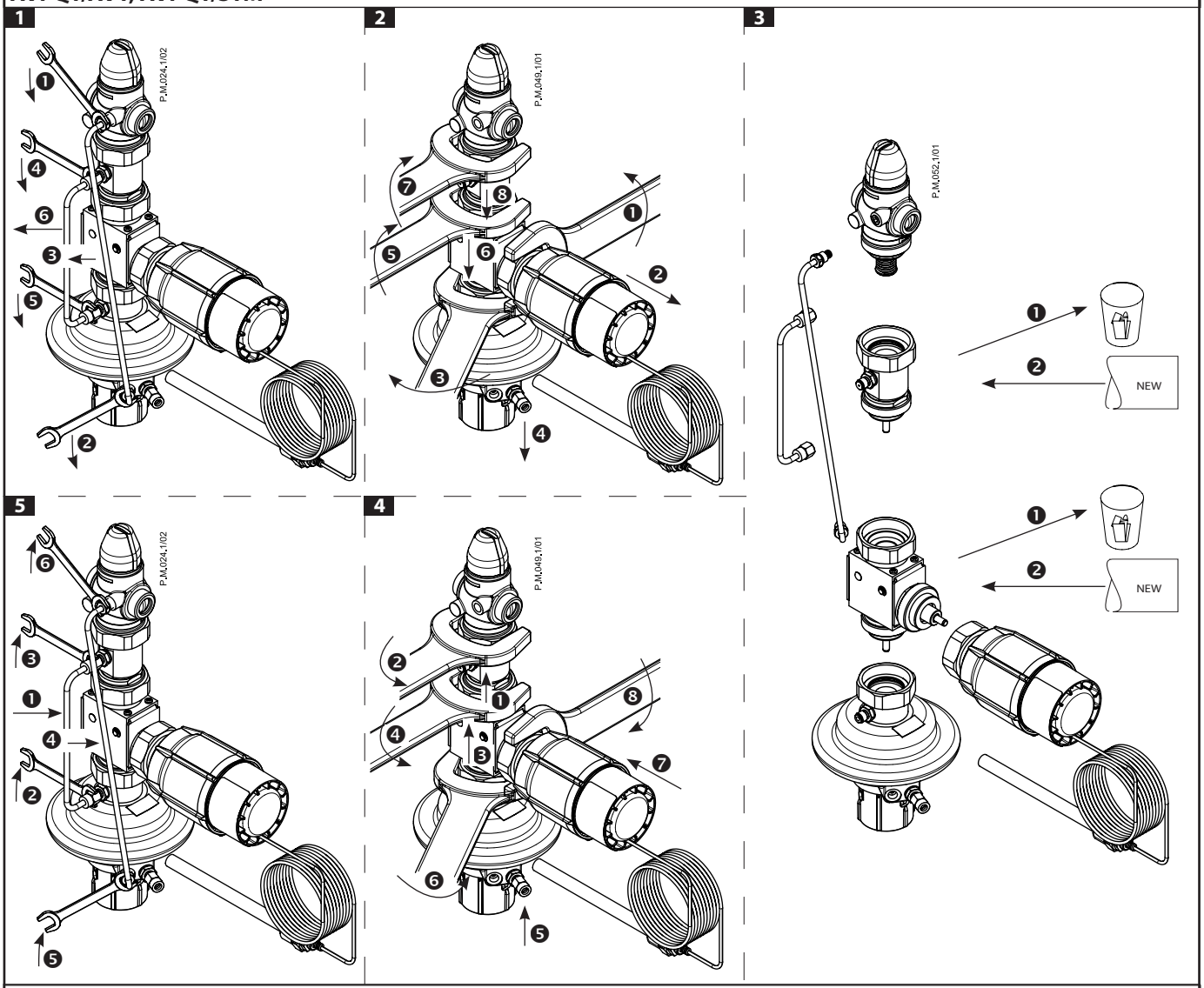

AVT/AVT/VG(F), AVT/AVT/VGS, STM/AVT/VG(F), STM/ AVT/VGS

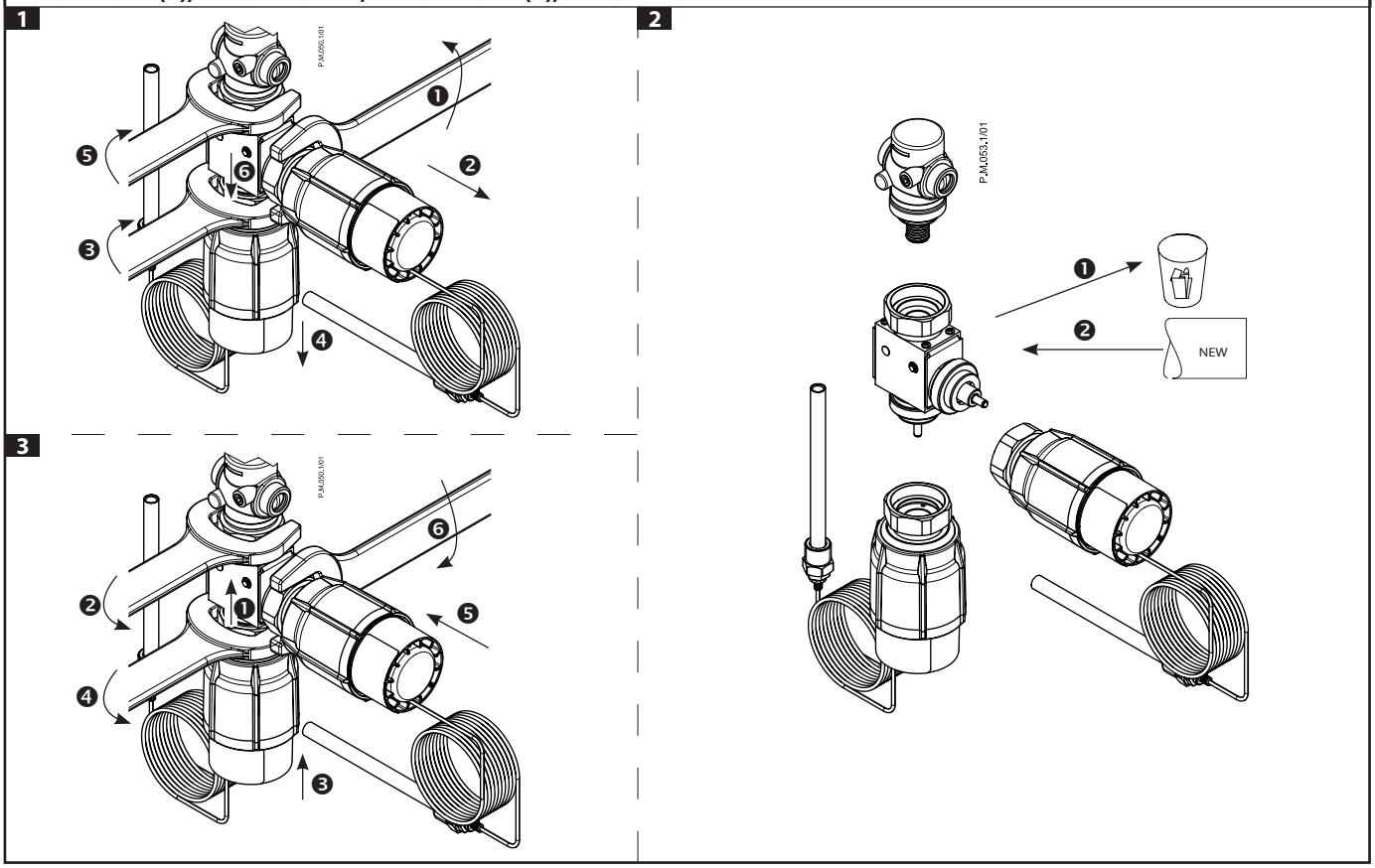

VI.CX.A1.00 © Danfoss 04/2008

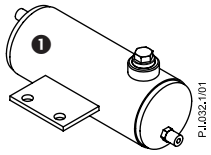
1
P.J.032.1/01

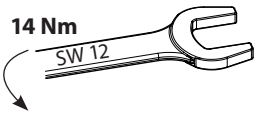
14 Nm
SW 12

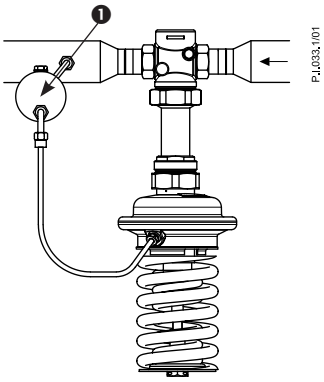
1
P.J.033.1/01

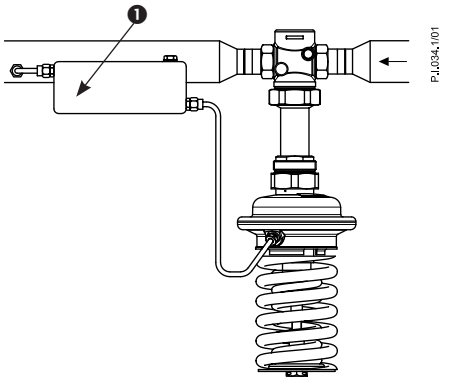
1
P.J.034.1/01

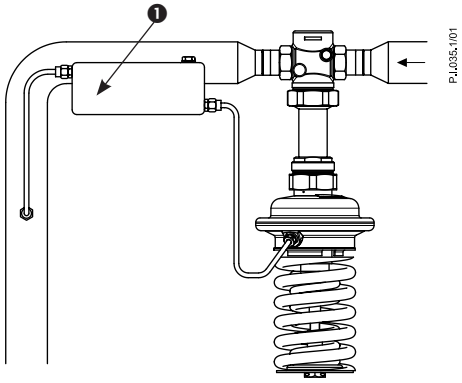
1
P.J.035.1/01

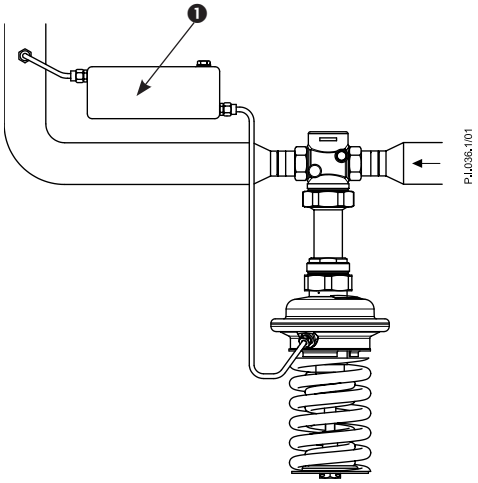
1
P.J.036.1/01

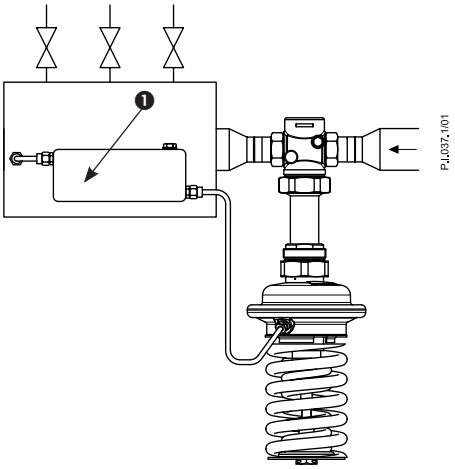
1
P.J.037.1/01

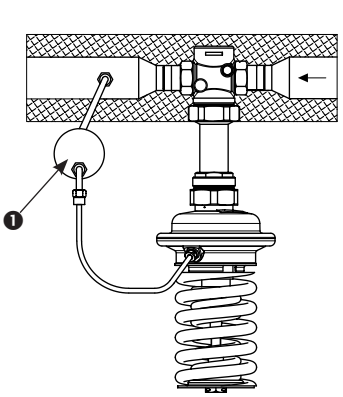
1
P.M.132.1/01

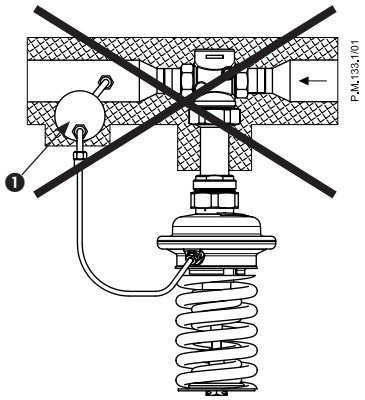
1
P.M.133.1/01



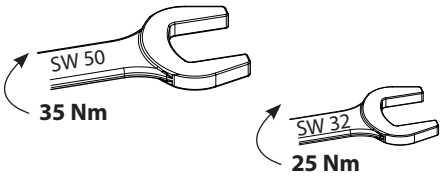
SW 50
35 Nm
SW 32
25 Nm

1

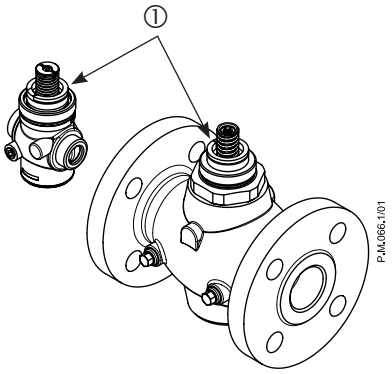
①
P.M.066.1/01

2

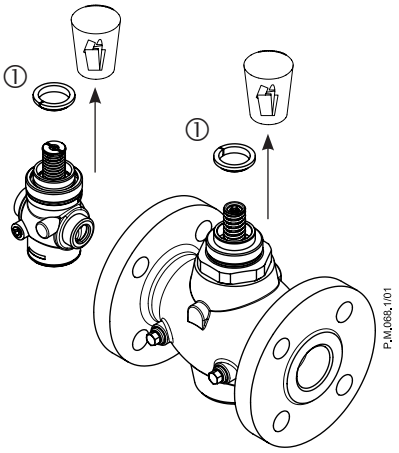
①
①
P.M.068.1/01

3

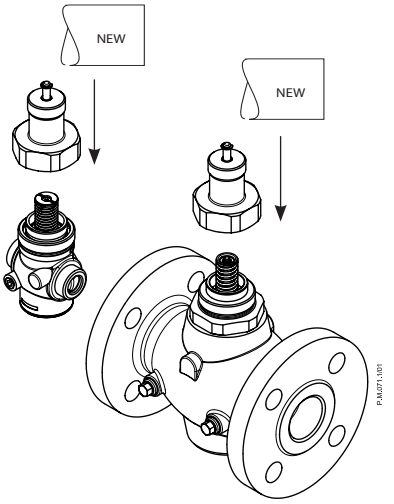
NEW
NEW
P.M.071.1/01

4

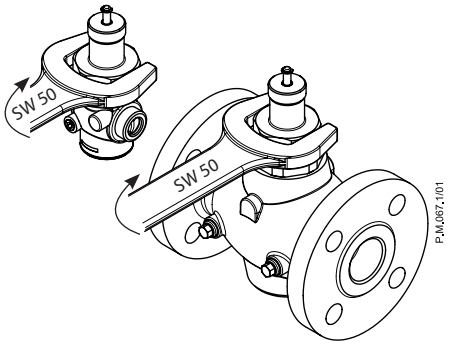
SW 50
SW 50
P.M.067.1/01

5

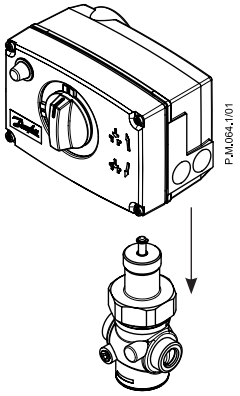
P.M.064.1/01

6

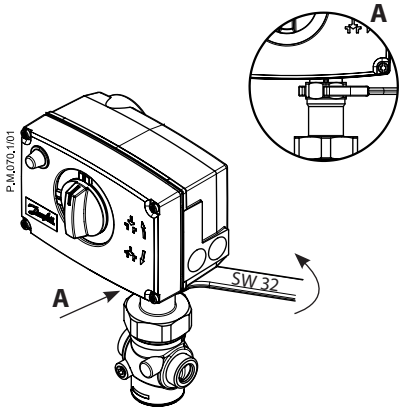
A
P.M.070.1/01
SW 32
A