Библиотека СОК

Installation Guide

Service kits – Catalogue

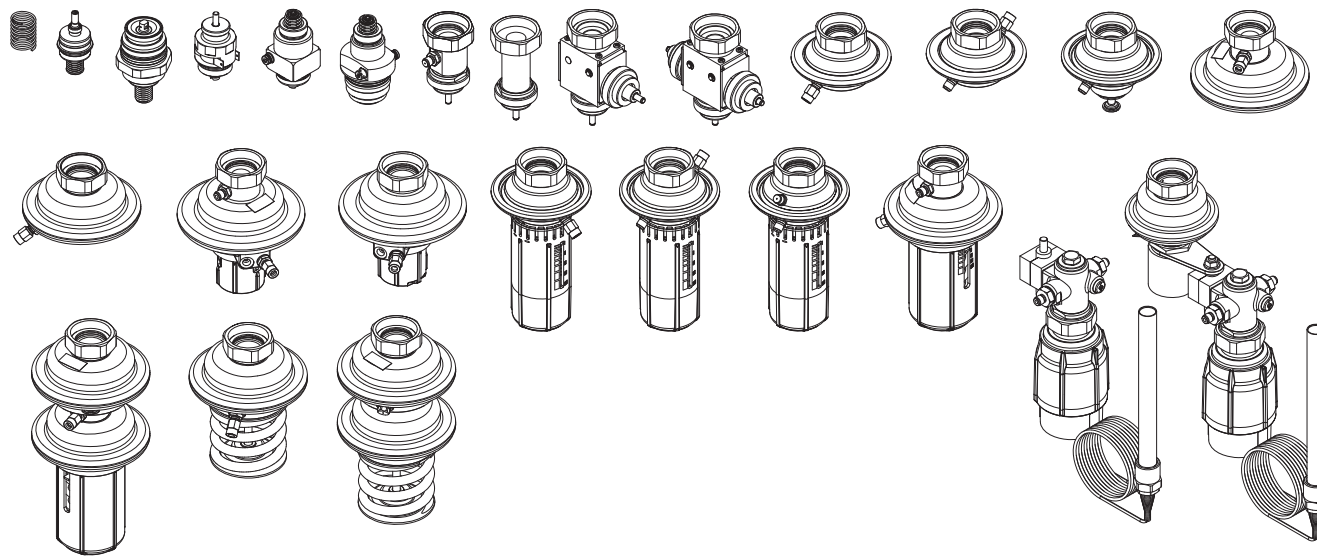

	PN	DN	Δp (bar) 0.05 ÷ 0.5 0.1 ÷ 0.5	0.2 ÷ 1.0	0.3 ÷2.0	0.8 ÷ 1.6	0.2	0.3	0.5	Code No.
A	16	15 ÷ 32	-	×		-	×	-	-	003H1330
			-	-		-	-	×	-	003H1326
			-	-		-	-	-	×	003H1331
			-	-		×	-	-	-	003H1332
	25	15 ÷ 50		-	-		×		-	88835920
		15 ÷ 25		-	-		-		×	88835930
		32 ÷ 50		-	-		-		×	88835940

	PN	DN	Δp_b (bar) 0.1 ÷ 0.5	0.2 ÷ 1.0	0.3 ÷2.0	0.8 ÷ 1.6	0.2	0.3	0.5	Code No.
B	16	15 ÷ 32					×			003H1330
	25	15 ÷ 25					×			88835920
		32 ÷ 50					-			-

M1	CuSn5ZnPb (Rg5)
M2	EN-GJS-400-18-LT (GGG 40.3)

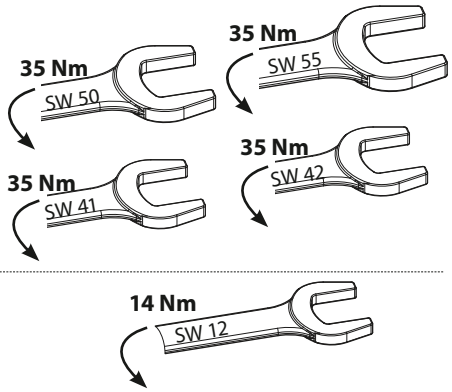

Page	PN			Page	PN		
2	16	AVP, AVP-F, AVPB, AVPB-F, AVD, AVQ, AVQM	M1	10	25	SAVA	M1
2	16	AVPQ, AVPQ-F	M1				M2
3	16	AVPQ 4, AVPQ 4-F	M1	11	25	SAVD	M1
3	16	AVPA	M1				M2
4	25	AVP, AVP-F, AVPB, AVPB-F, AVPBT-F, AVD, AVQ, AVQT, AVQM, AVQMT	M1	12	25	AVPBT	M1
			M2	13	25	AVPBT	M2
5	25	AVPQ, AVPQ-F	M1	15	25	AVPQT	M1
			M2	16	25	AVPQT	M2
6	25	AVPQ 4, AVPQ 4-F	M1	18	25	VG	M1
			M2	18	25	VG, VGF	M2
7	25	AVPA	M1	18	25	VGS	M1
			M2	19	16	Control valve insert	M1
8	25	AVA	M1	20	25	Control valve insert	M1
			M2	21			M2
9	25	AVDS	M1	22	25	STL	M1, M2

PN 16	AVP, AVP-F, AVPB, AVPB-F, AVD	A	M1
	AVQ, AVQM	B	

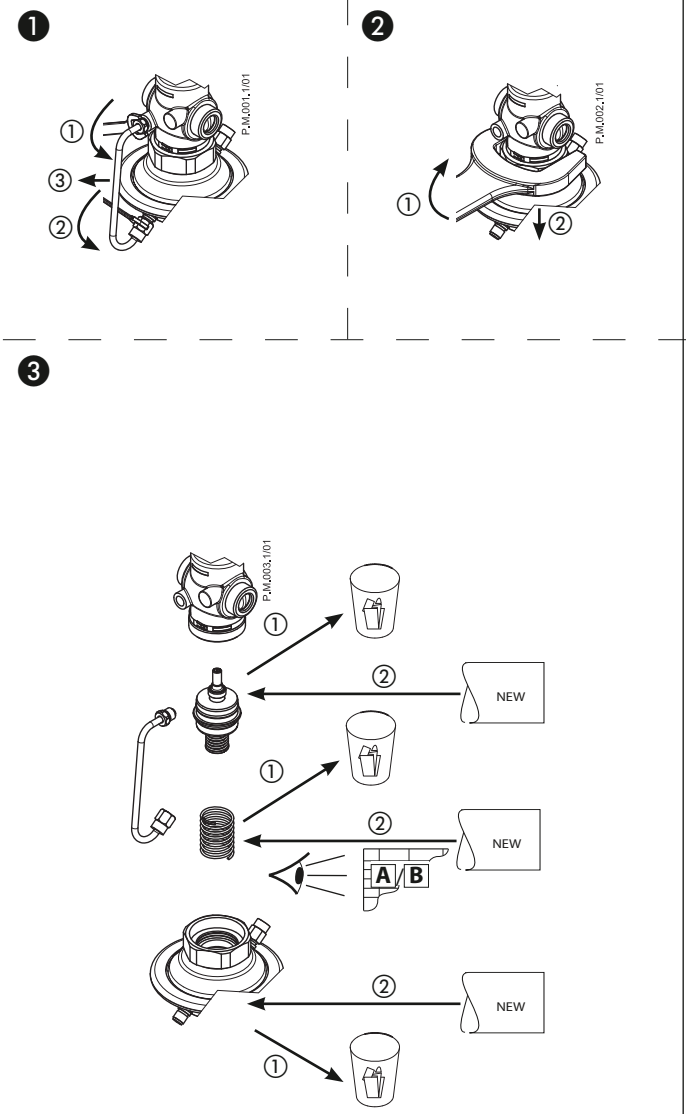

PN 16	AVPQ, AVPQ-F	A, B	M1

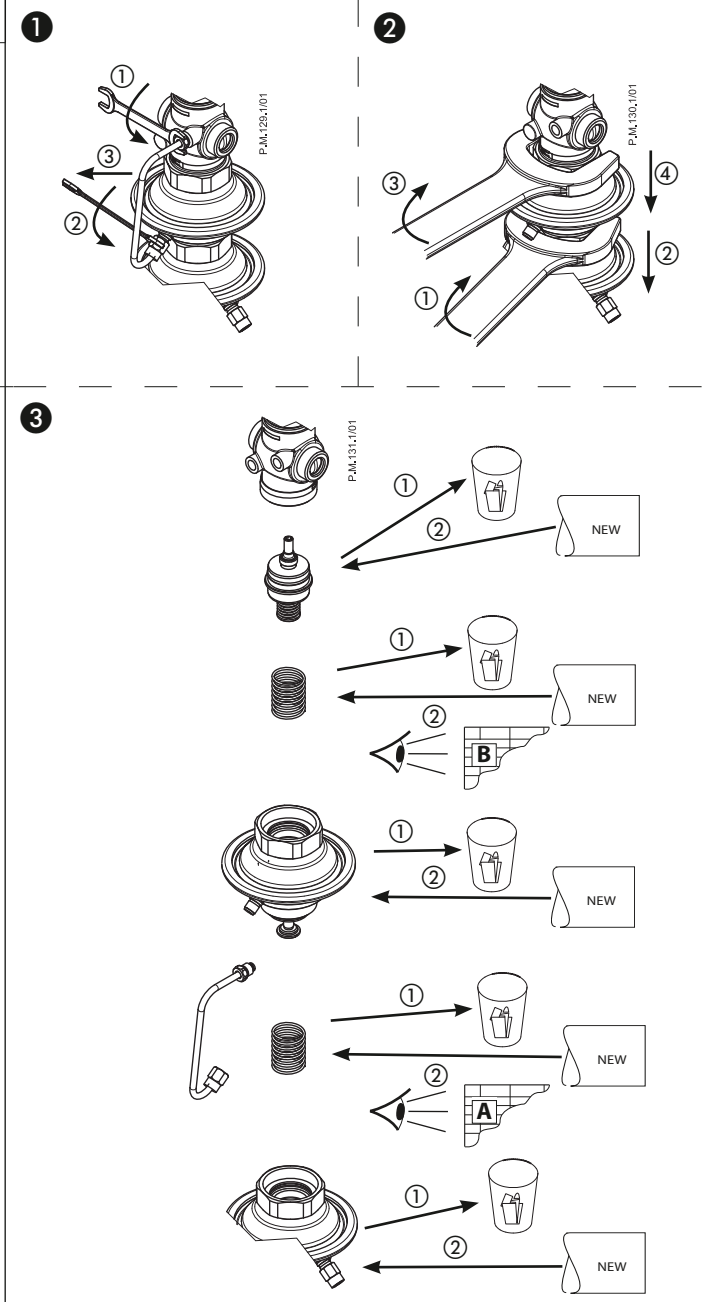

PN 16	AVPQ 4, AVPQ 4-F	A , B	M1

❶

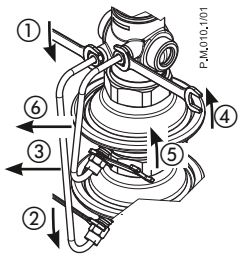

❷

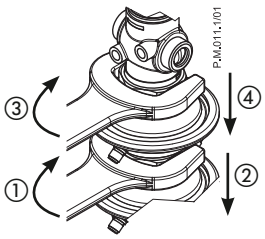

❸

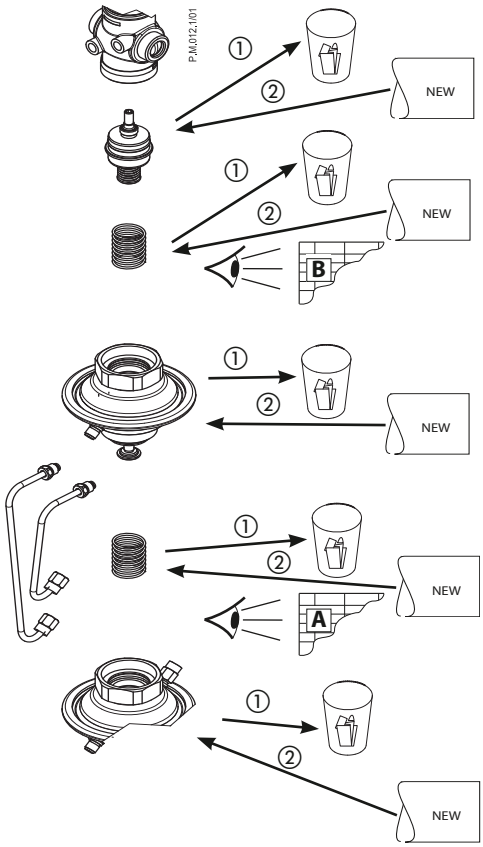

❺

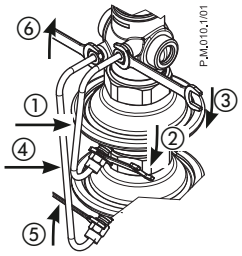

❹

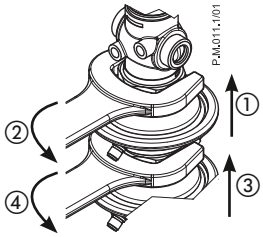

PN 16	AVPA	A	M1

❶

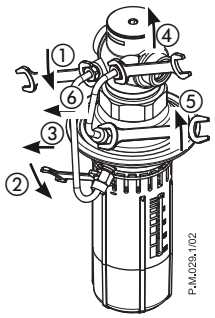

❷

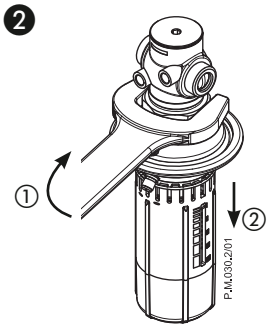

❸

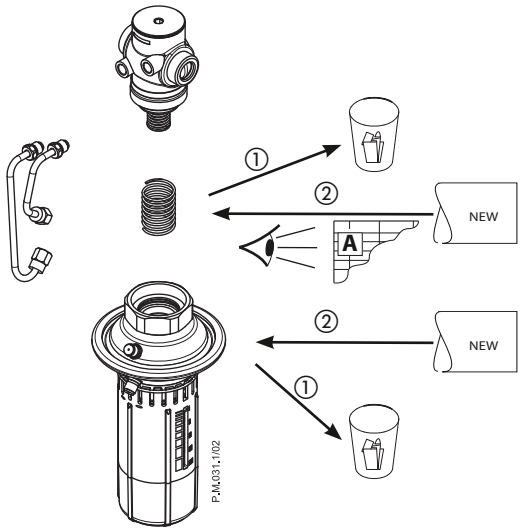

❺

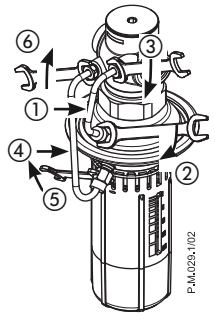

❹

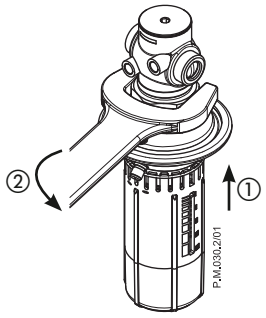

PN 25	AVP, AVP-F, AVPB, AVPB-F, AVPBT-F, AVD	A	M1
	AVQ, AVQT, AVQM, AVQMT	B	

PN 25	AVP, AVP-F, AVPB, AVPB-F, AVPBT-F, AVD	M2
	AVQ, AVQT, AVQM, AVQMT	

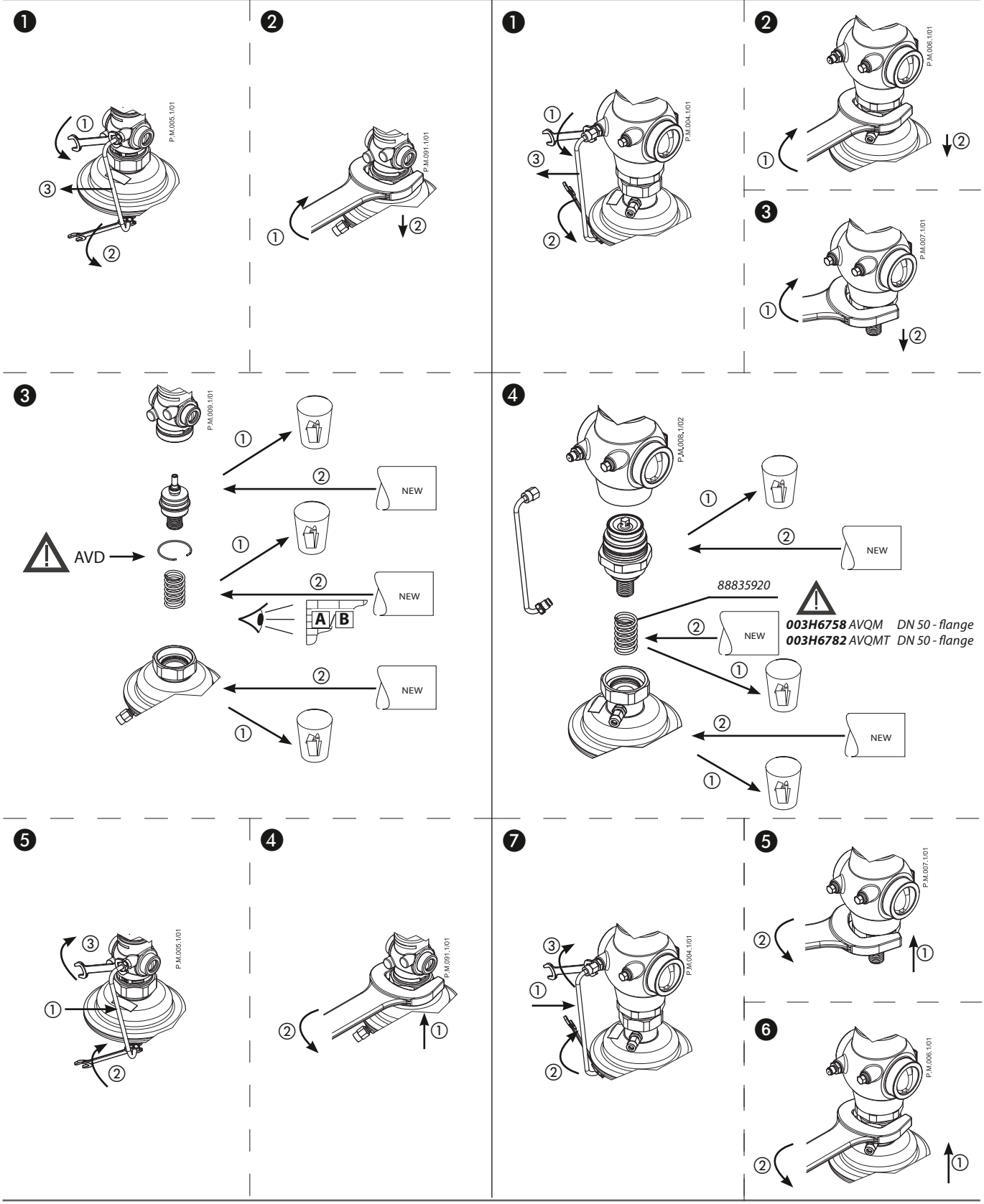

PN 25	AVPQ, AVPQ-F	B	M1

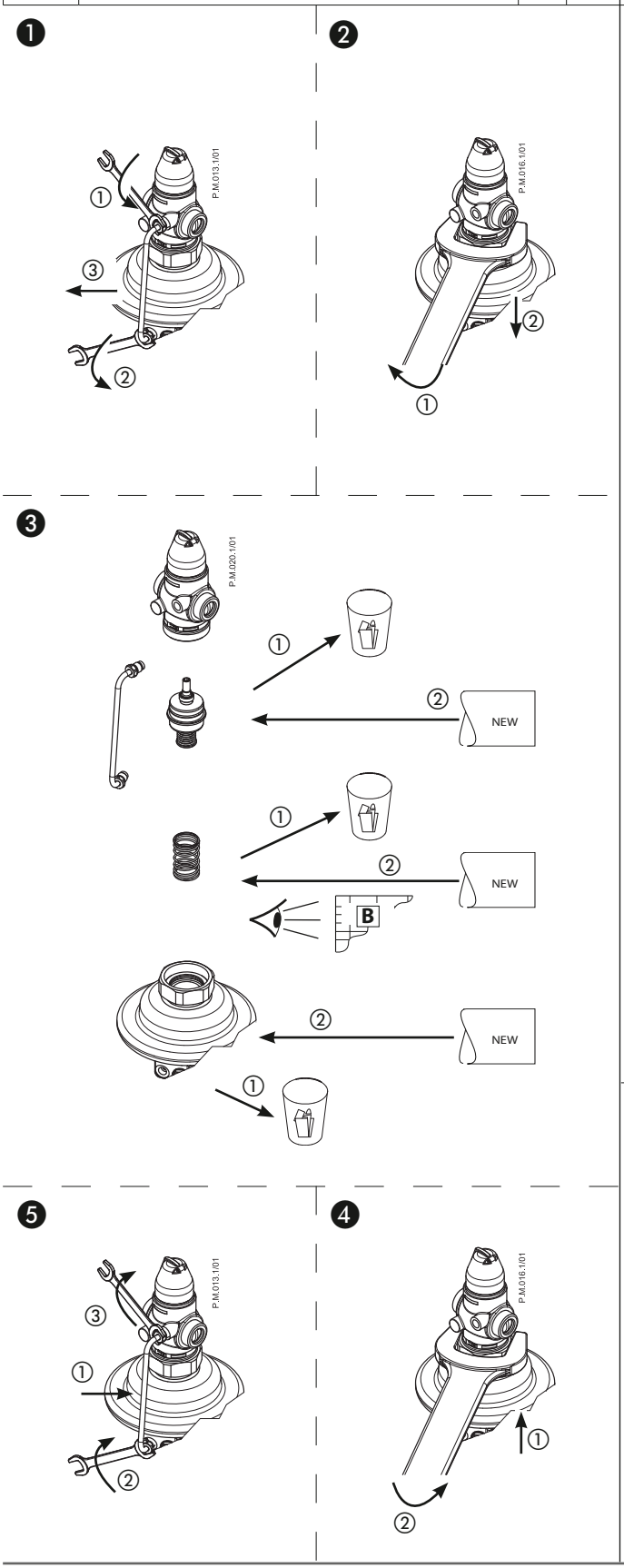

PN 25	AVPQ, AVPQ-F	M2

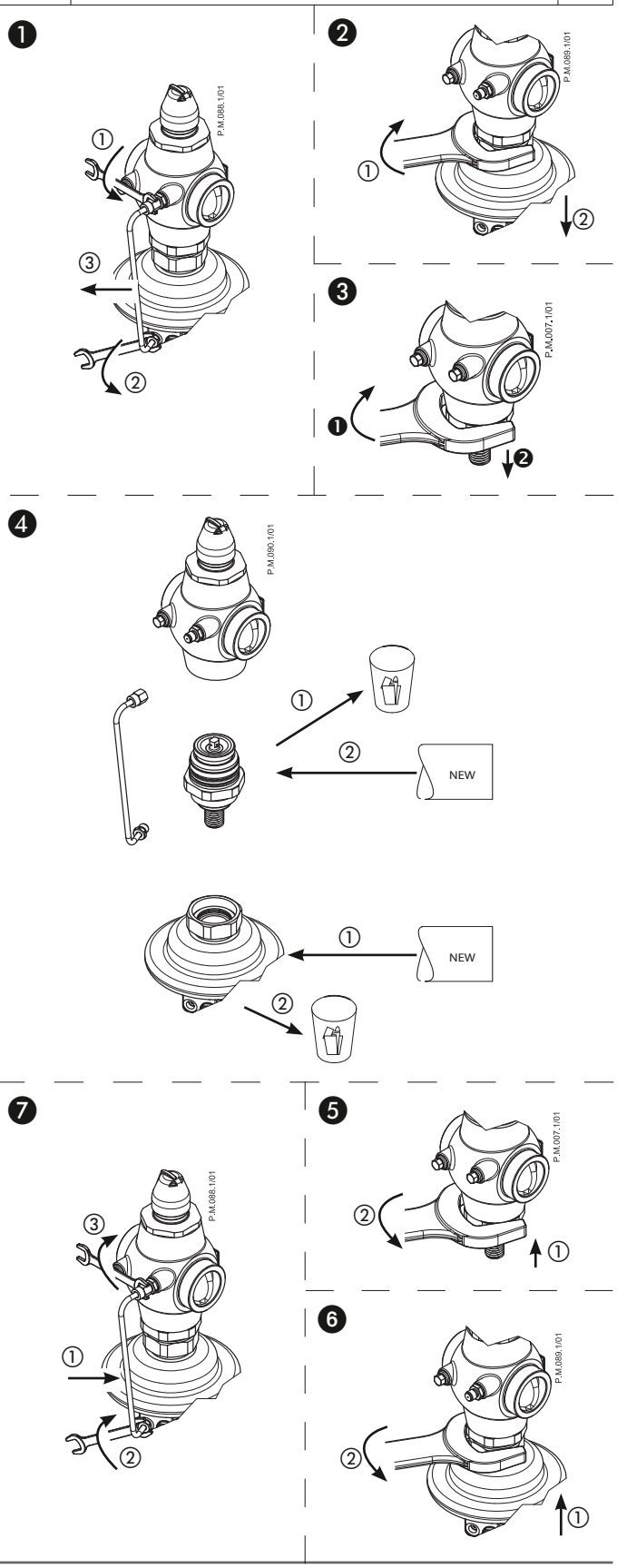

PN 25	AVPQ 4, AVPQ 4-F		B	M1

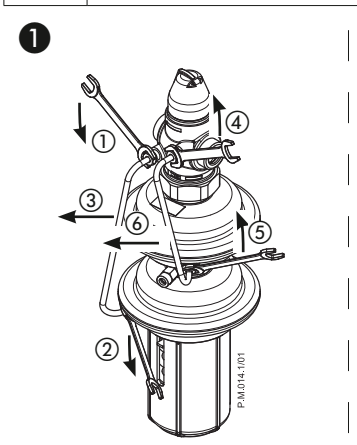

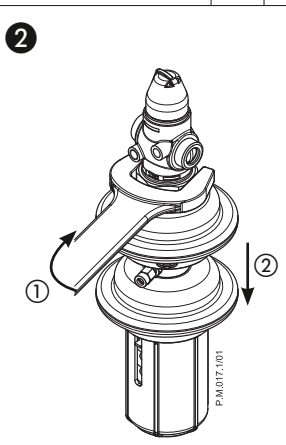

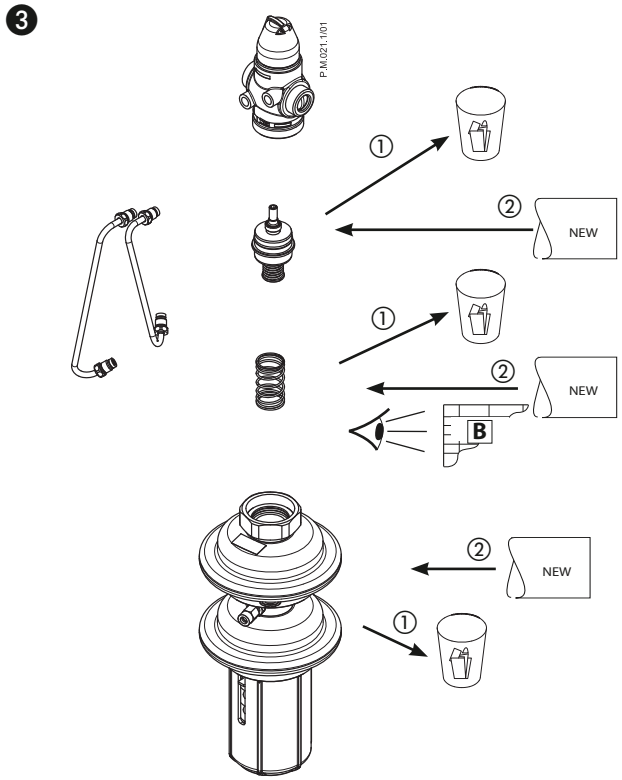

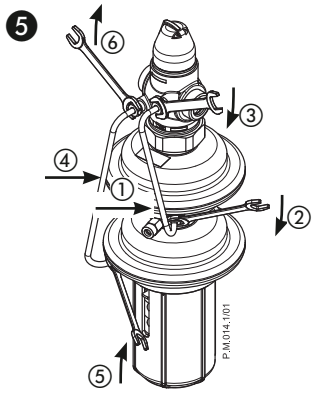

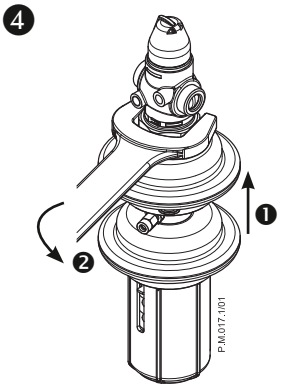

PN 25	AVPQ 4, AVPQ 4-F	M2

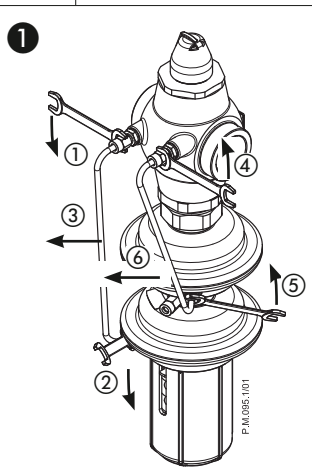

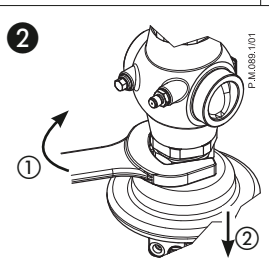

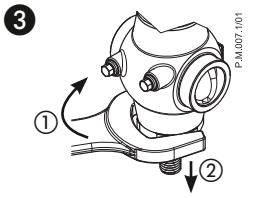

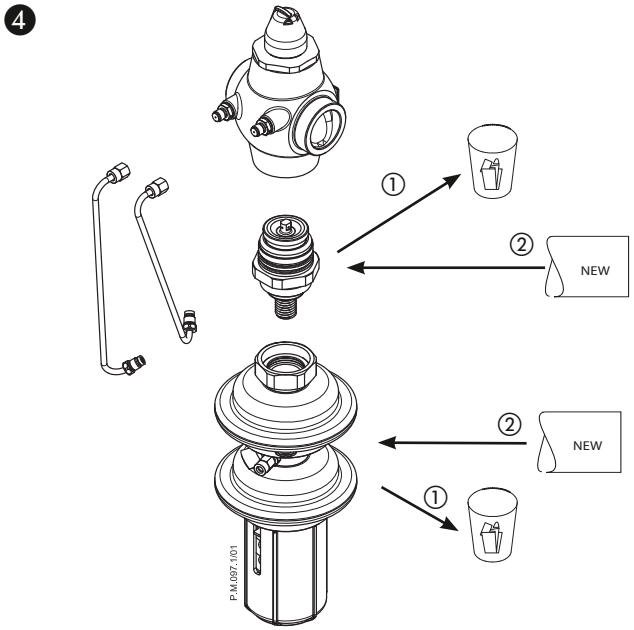

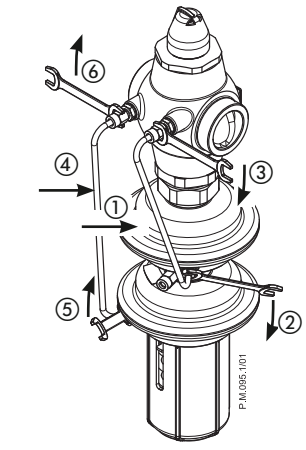

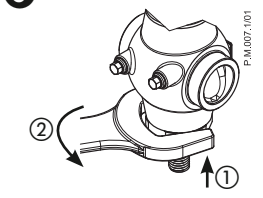

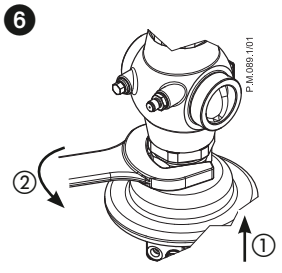

PN 25	AVPA	M1

❶

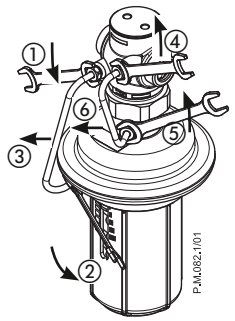

❷

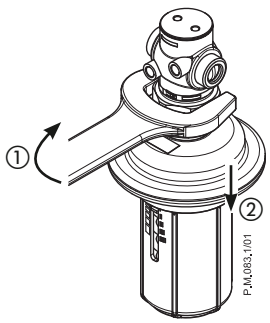

❸

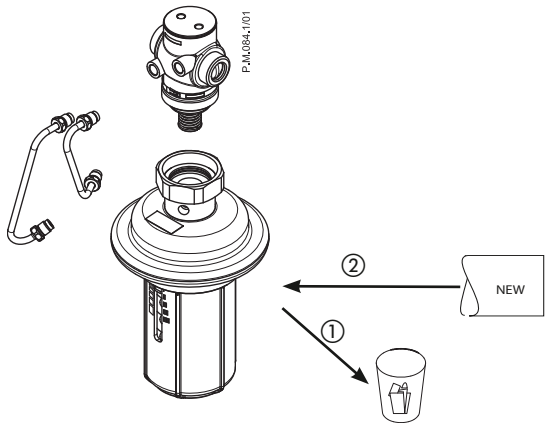

❺

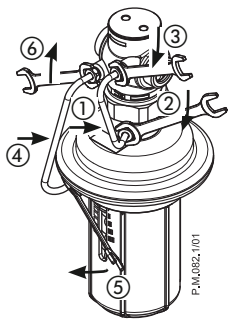

❹

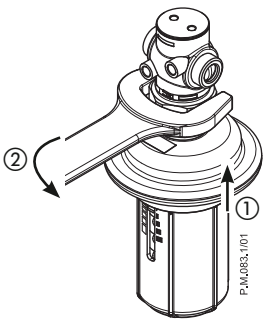

PN 25	AVPA	M2

❶

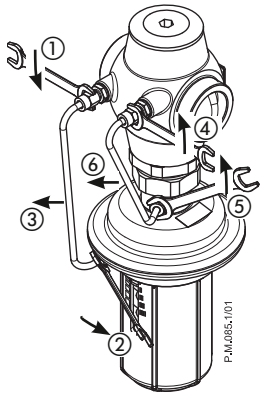

❷

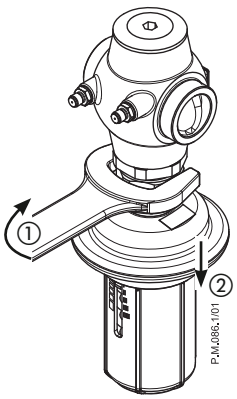

❸

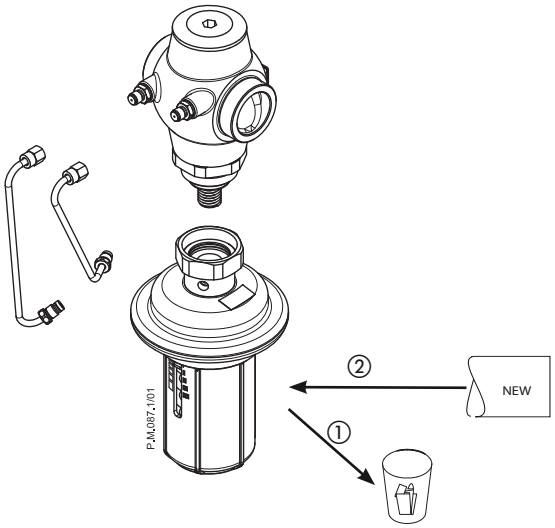

❺

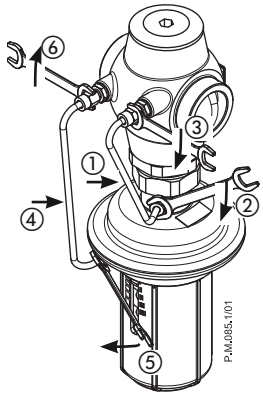

❹

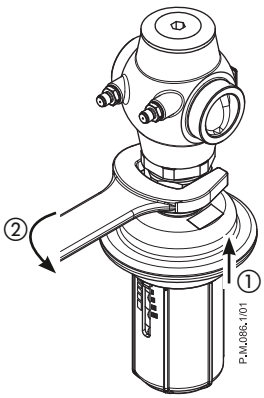

PN 25	AVA	M1

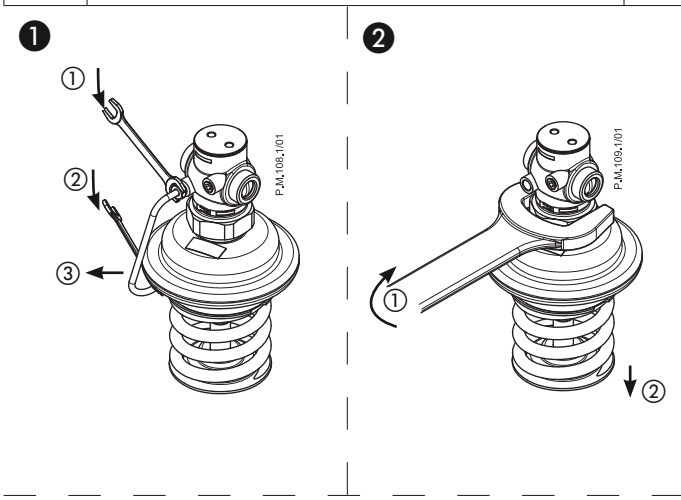

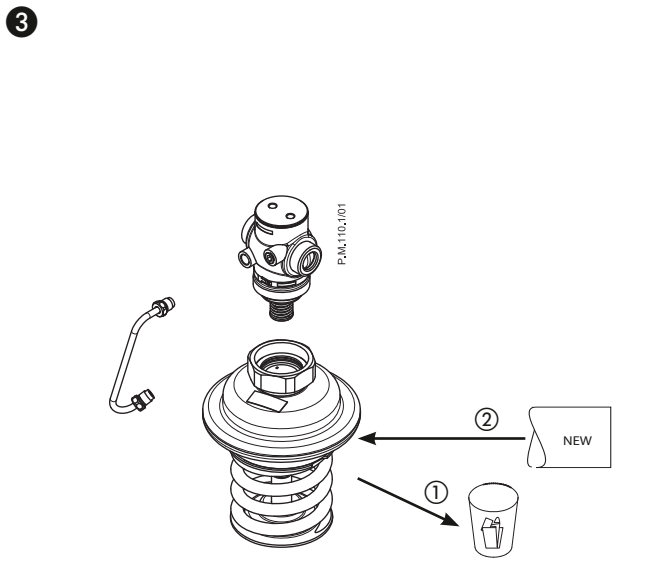

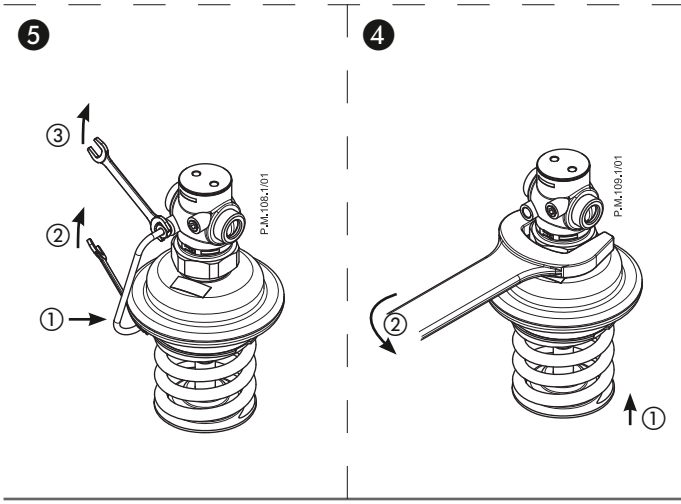

PN 25	AVA	M2

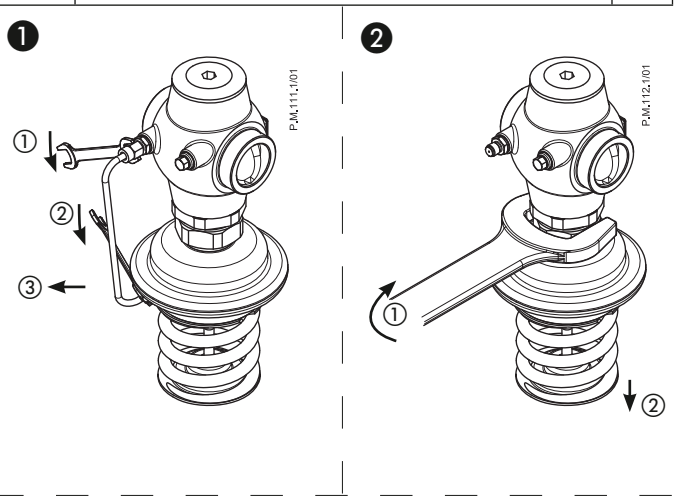

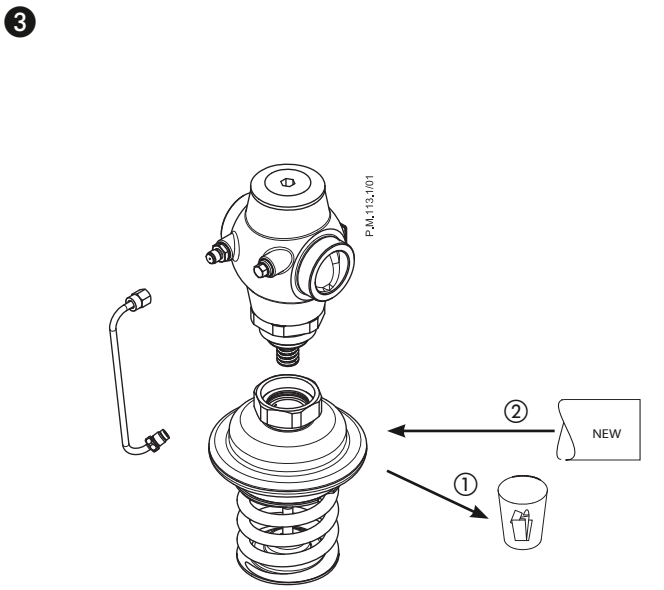

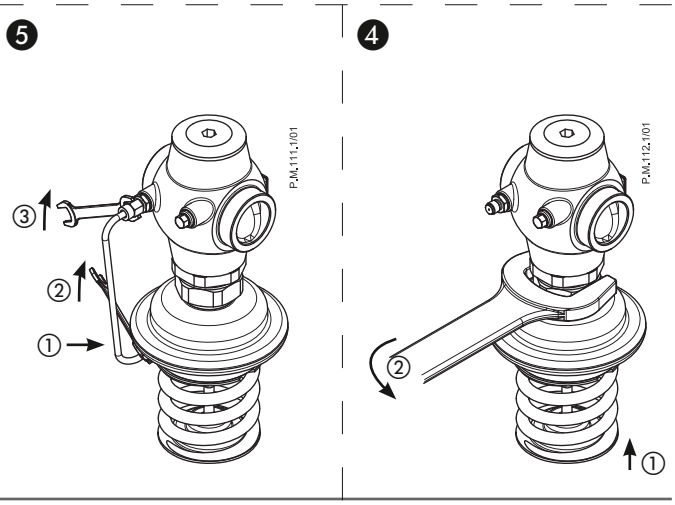

PN 25	AVDS	M1

❶

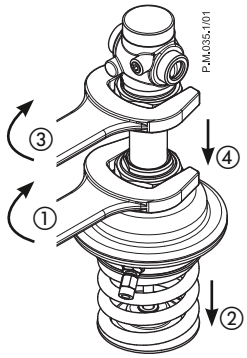

❷

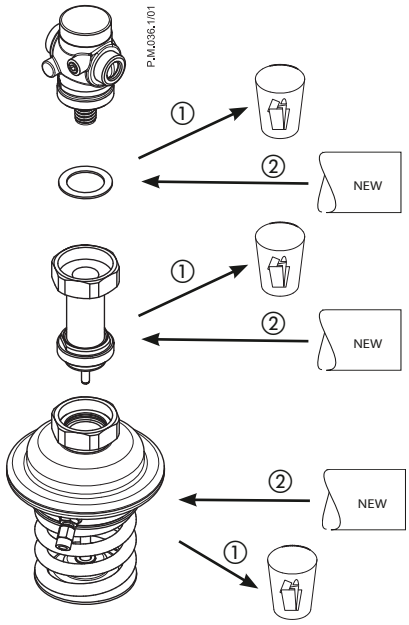

❸

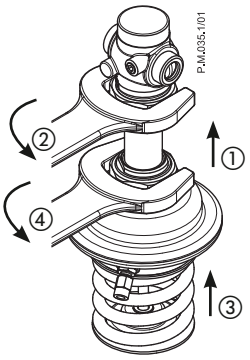

PN 25	SAVA	M1

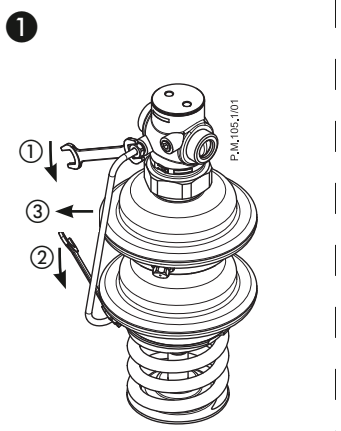

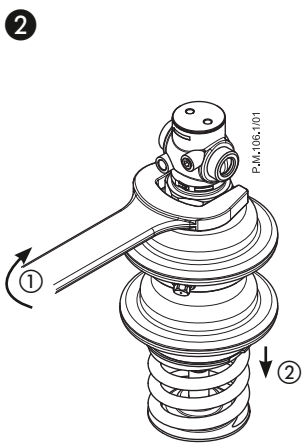

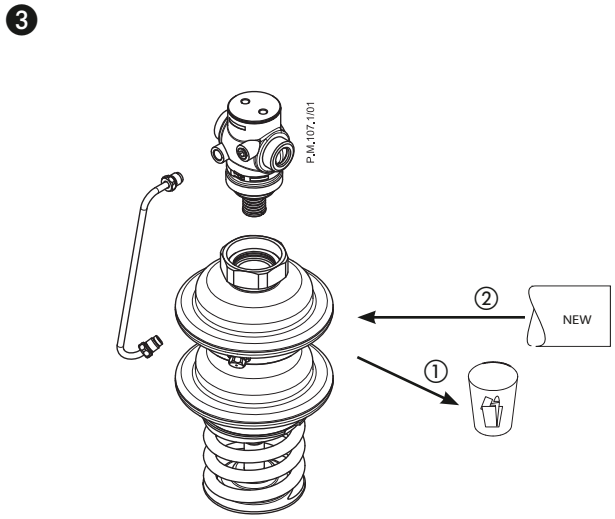

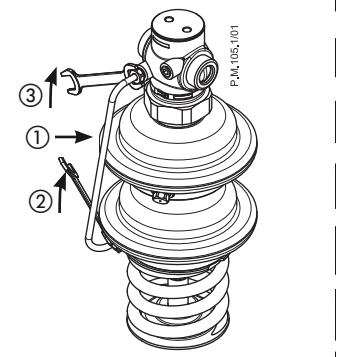

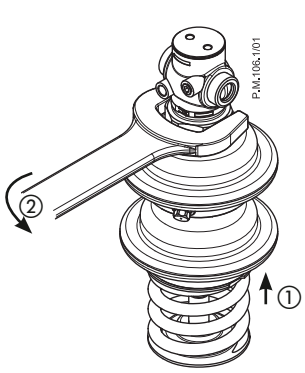

PN 25	SAVA	M2

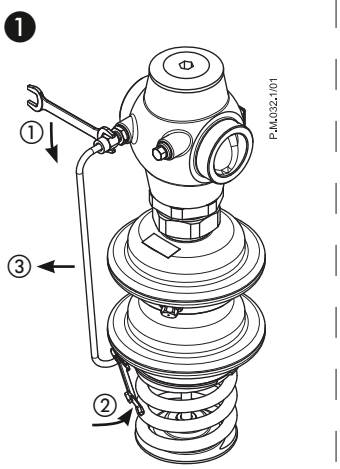

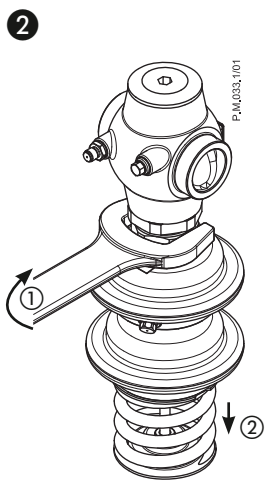

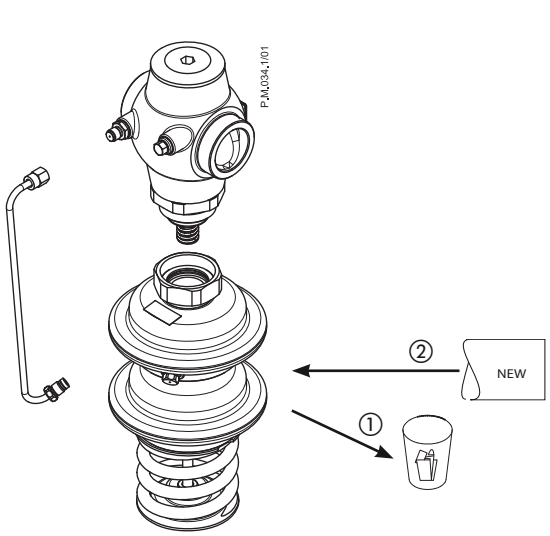

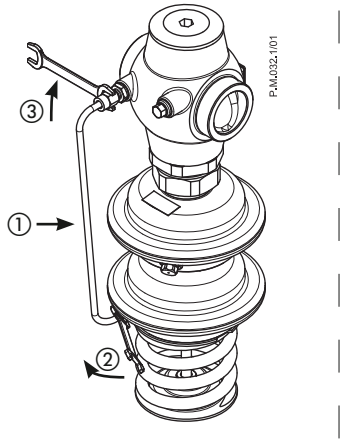

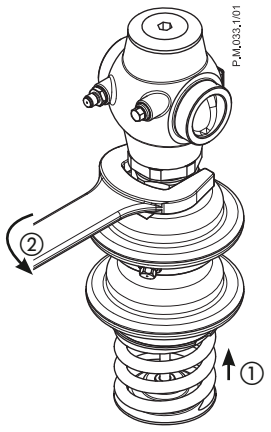

PN 25	SAVD	M1

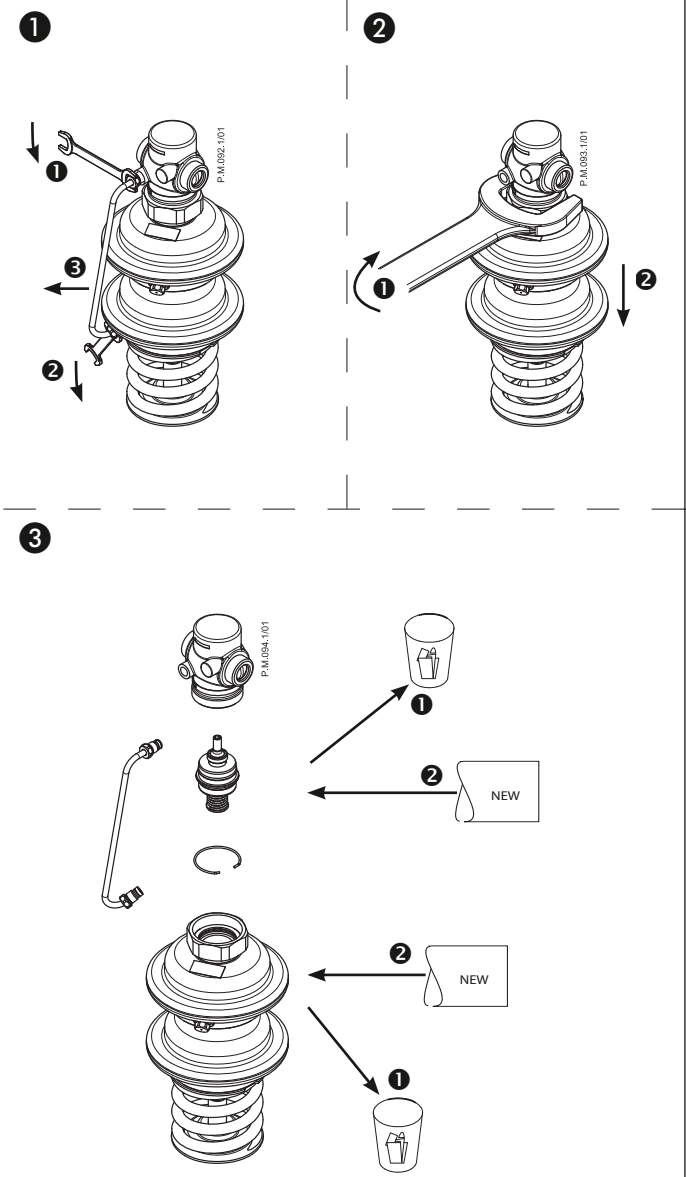

PN 25	SAVD	M2

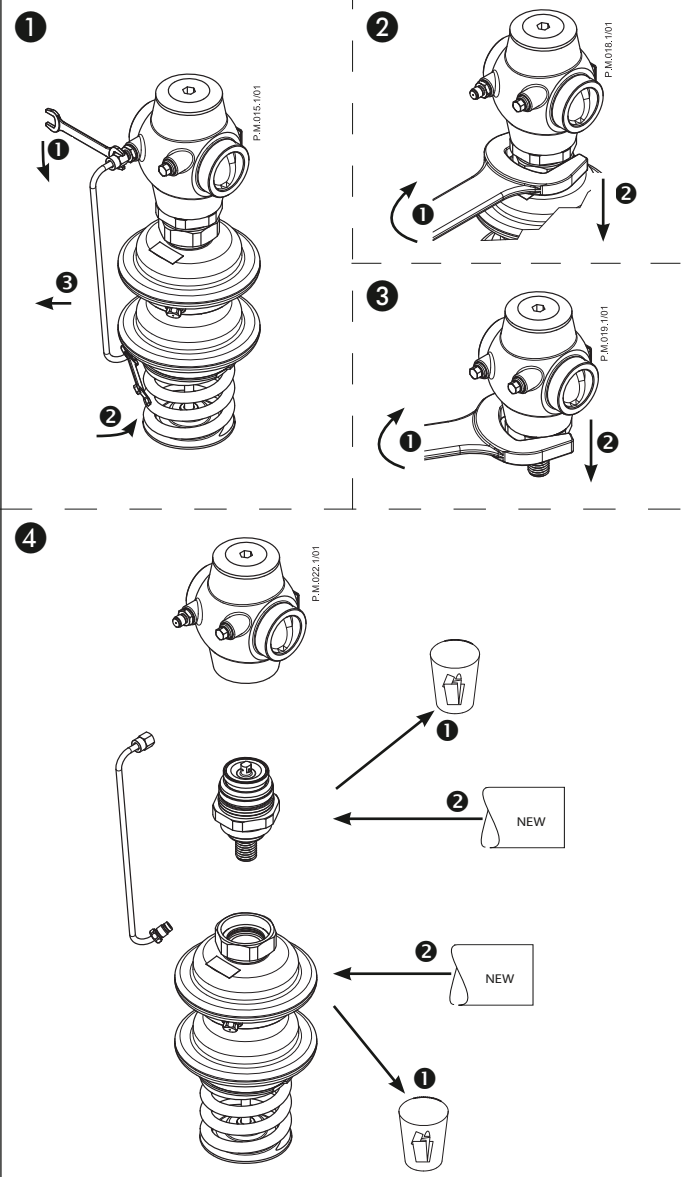

PN 25	AVPBT	M1

❶

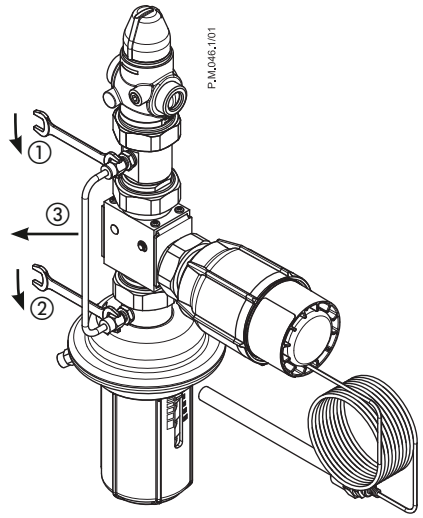

❷

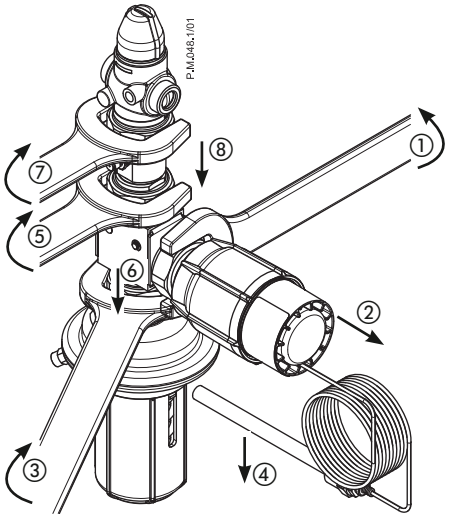

❸

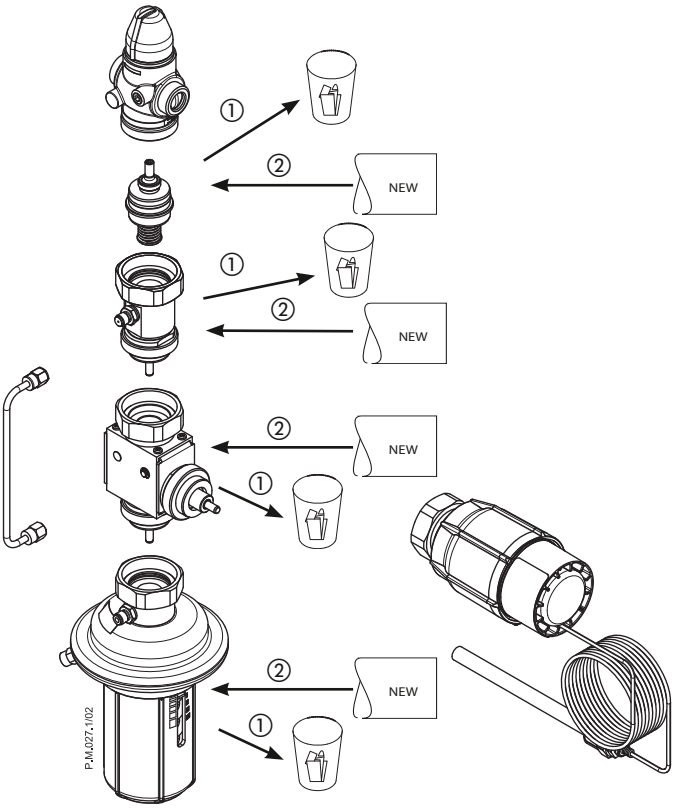

❹

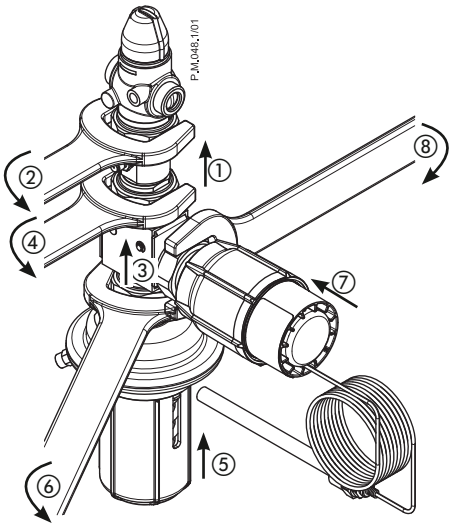

❺

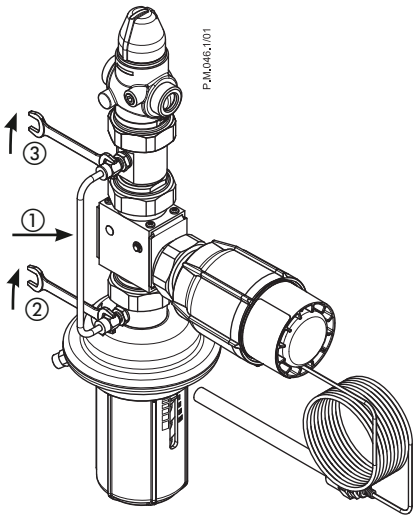

PN 25	AVPBT	M2

❶

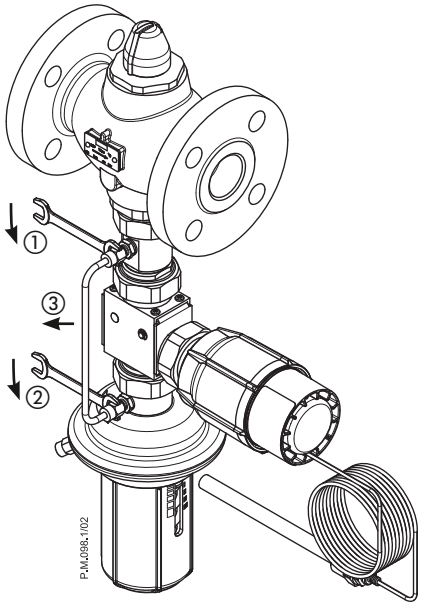

❷

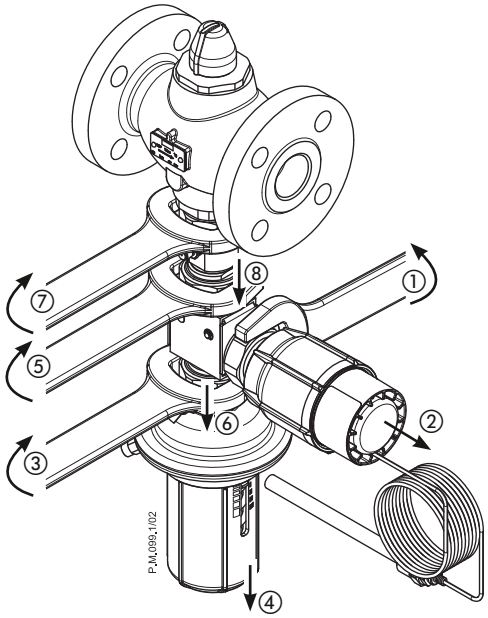

❸

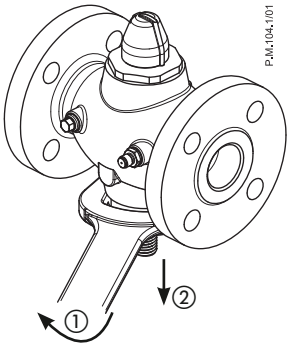

❹

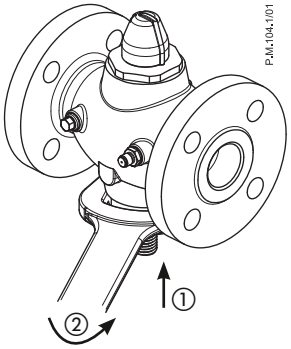

❺

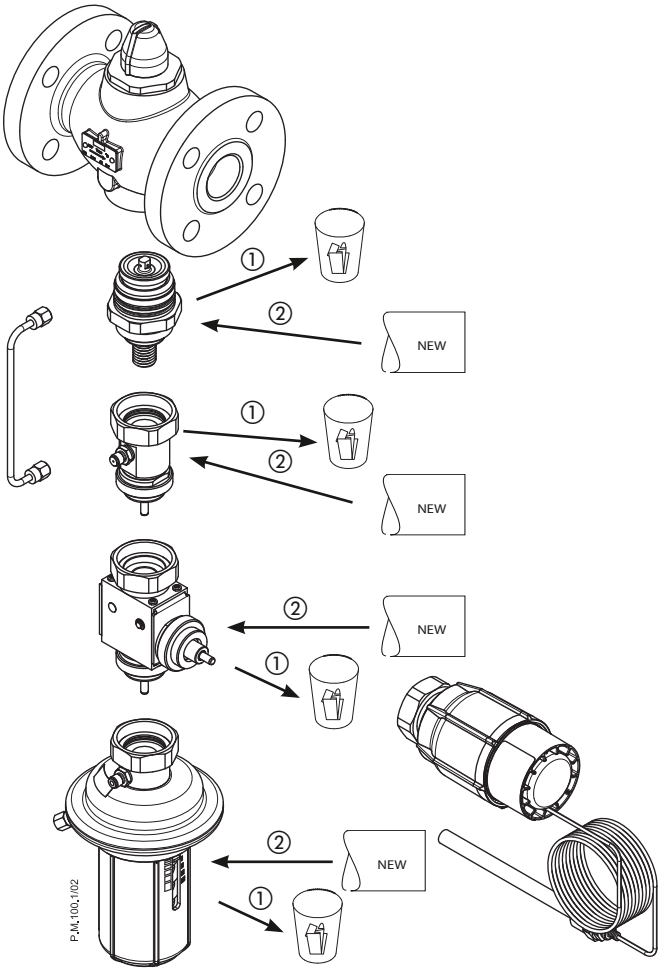

PN 25	AVPBT	M2

7

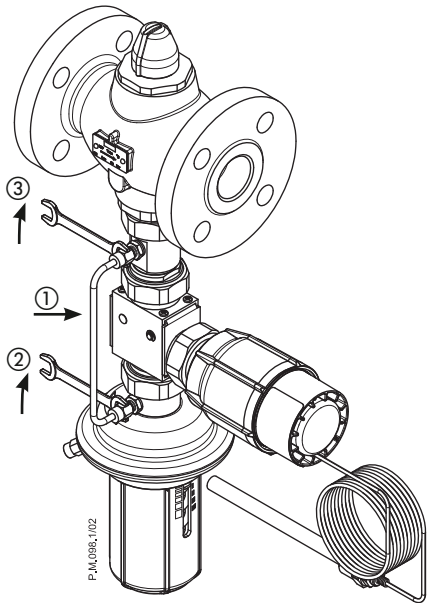

6

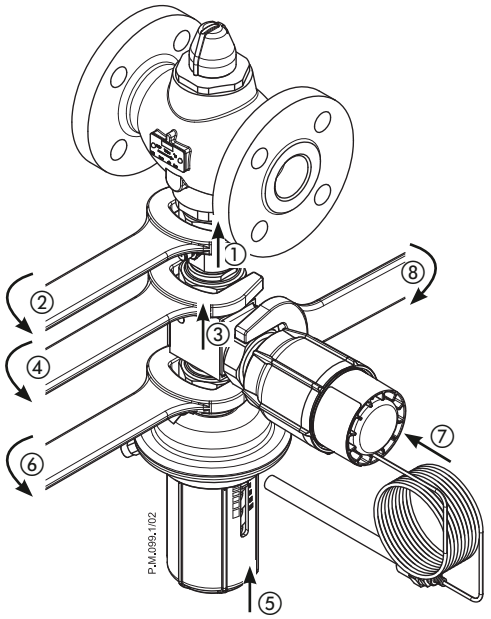

PN 25	AVPQT	M1

❶

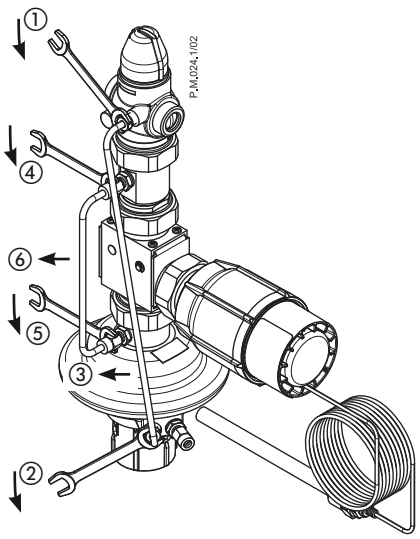

❷

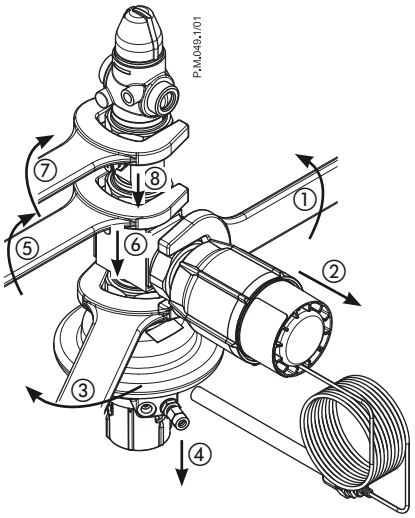

❸

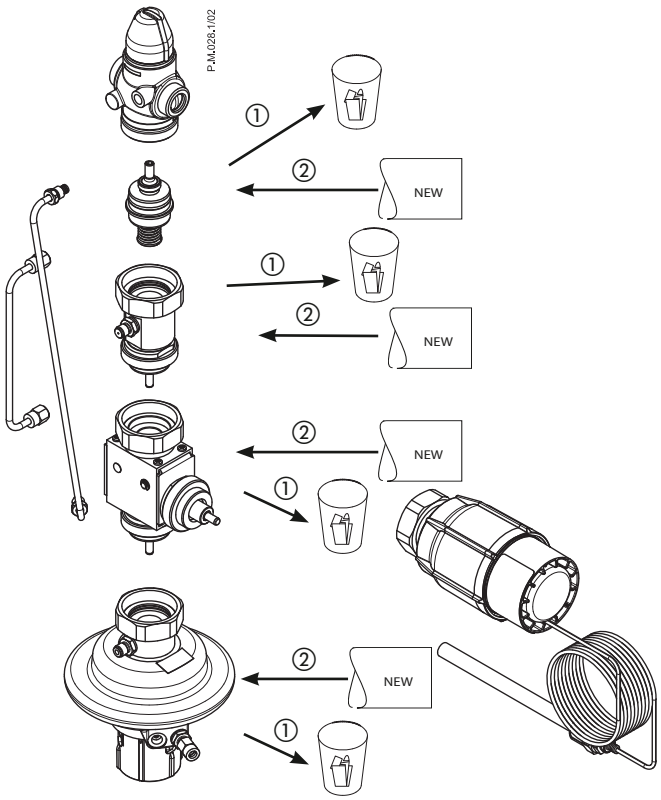

❹

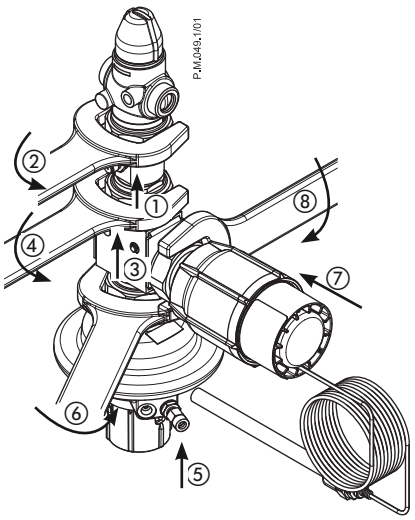

❺

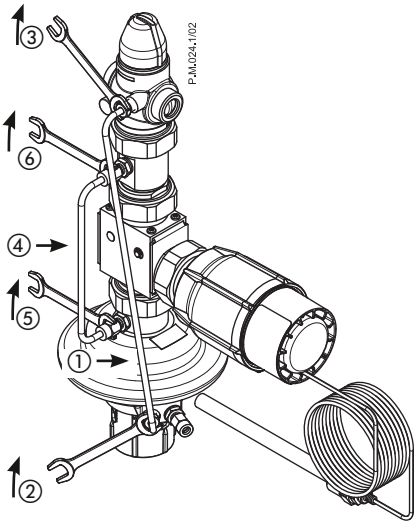

PN 25	AVPQT	M2

❶

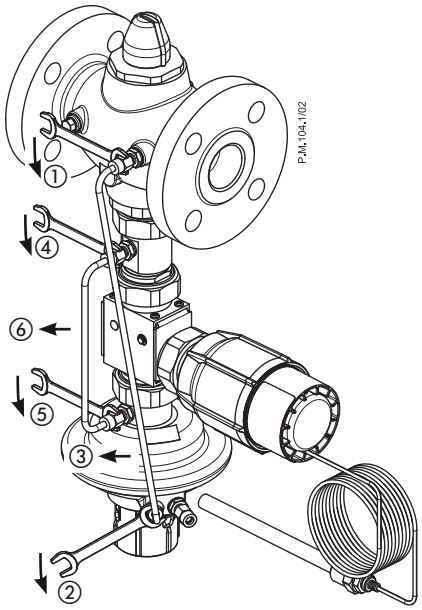

❷

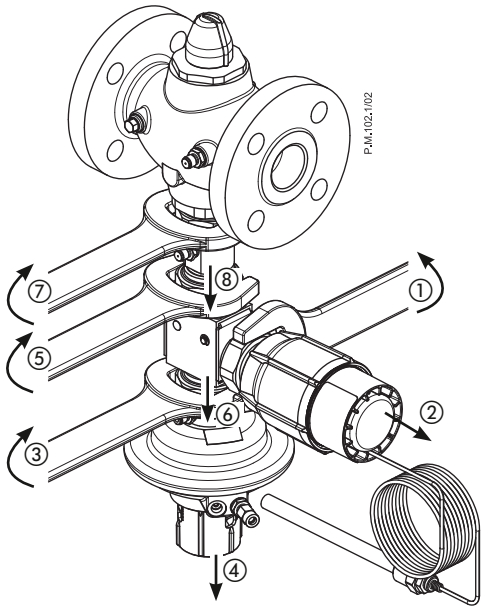

❸

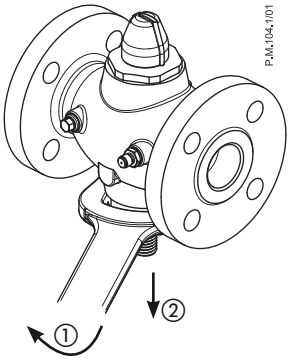

❹

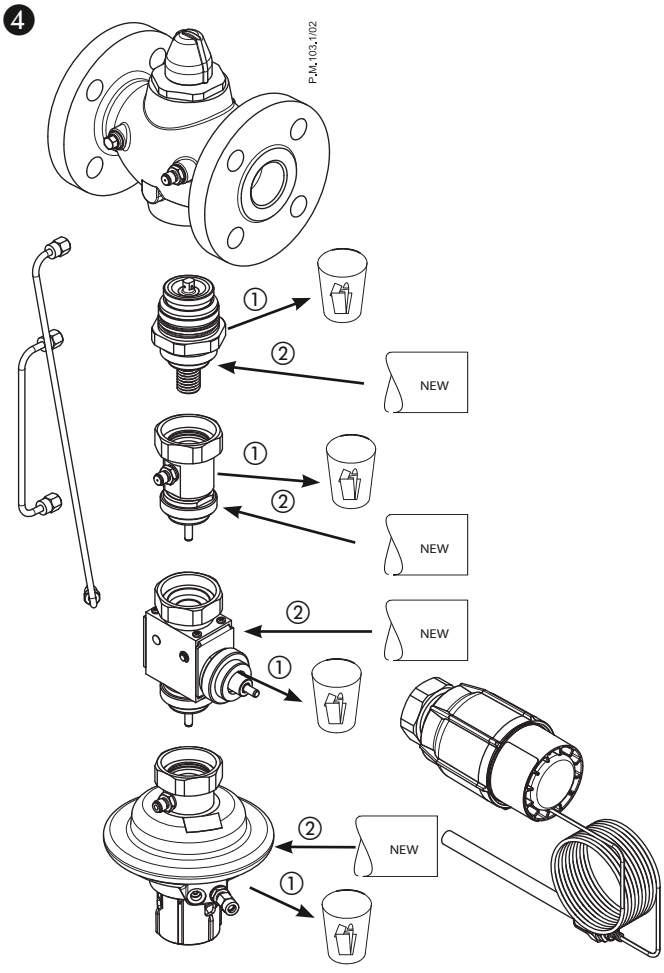

❺

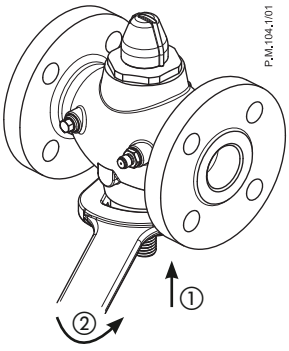

PN 25	AVPQT	M2

7

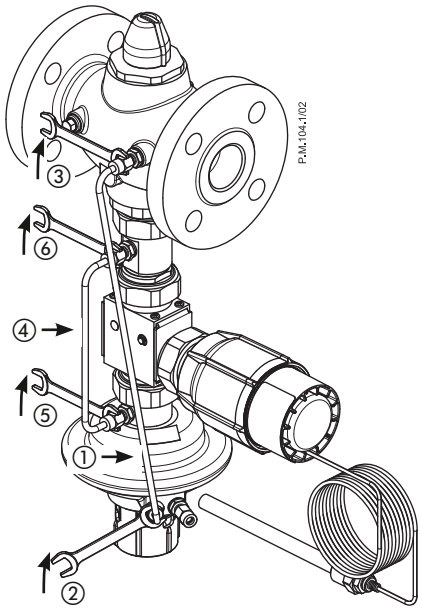

6

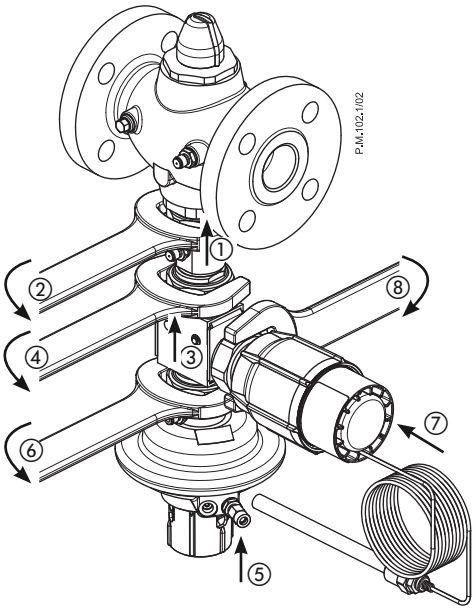

PN 16	VG	M1	PN 25	VG, VGF	M2	PN 16	VGS	M1

❶



❶

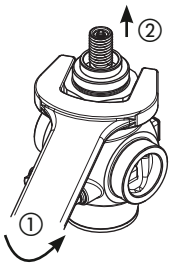

❶

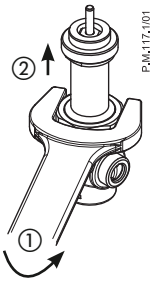

❷

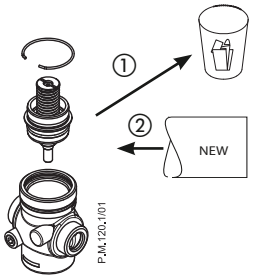

❷

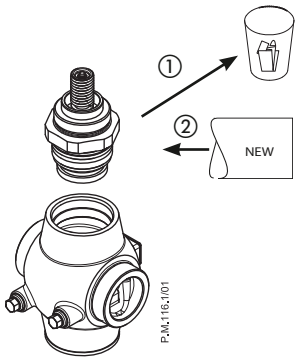

❷

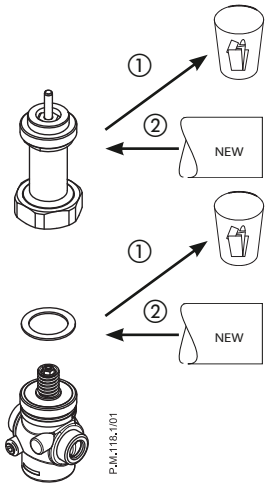

❸



❸

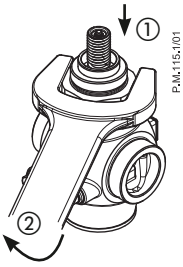

❸

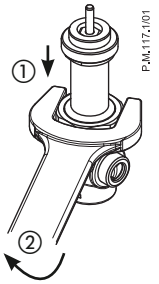

PN 16	M1	PN 25	M1		M2

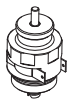

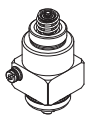



M1	CuSn5ZnPb (Rg5)
M2	EN-GJS-400-18-LT (GGG 40.3)

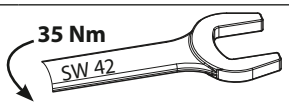

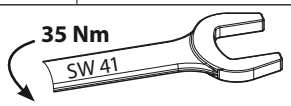

AMV(E)

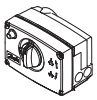

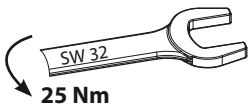

PN 16 **M1**

❶

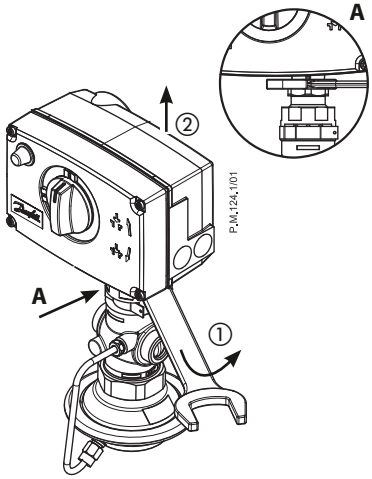

❷

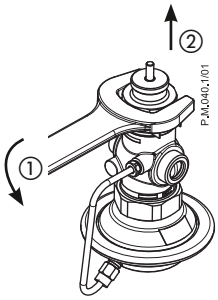

❸

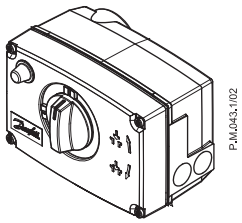

❺

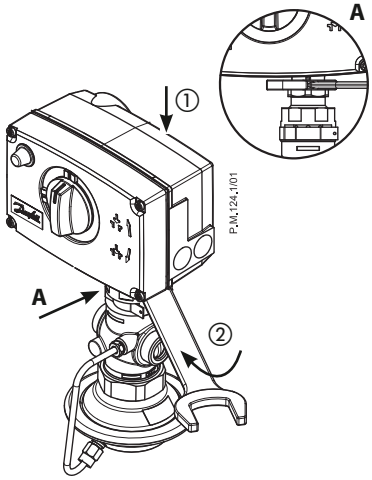

❹

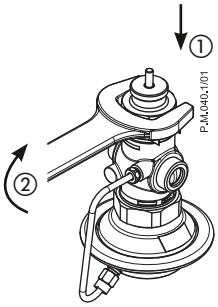

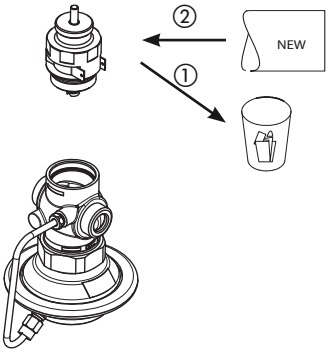

PN 25		M1

❶

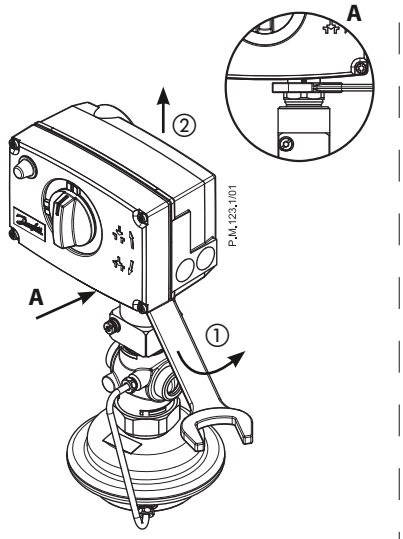

❷

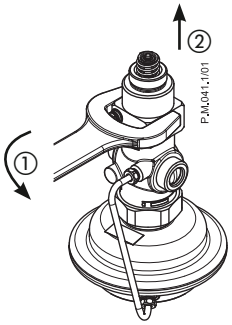

❸

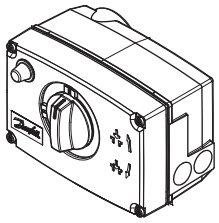

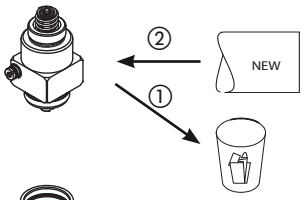

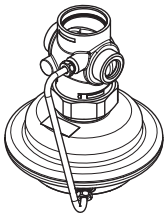

❺

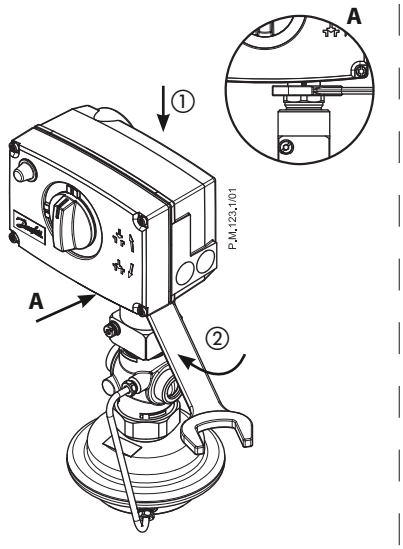

❹

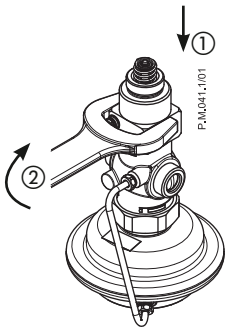

PN 25		M2

❶

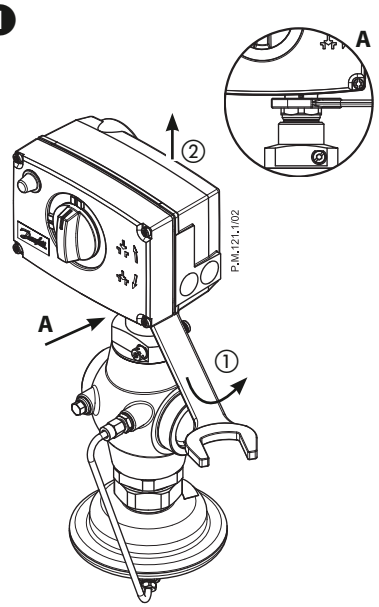

❷

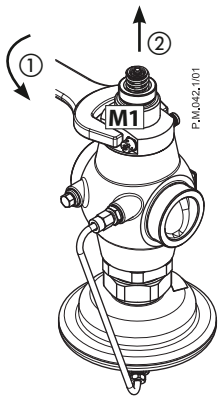

❸

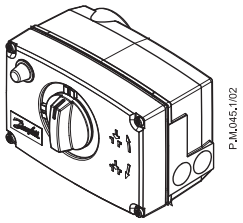

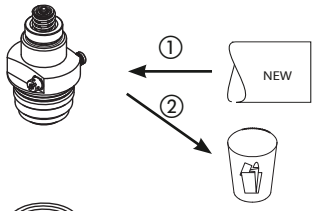

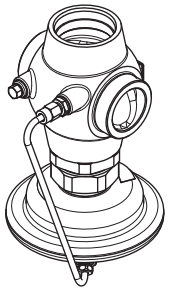

❺

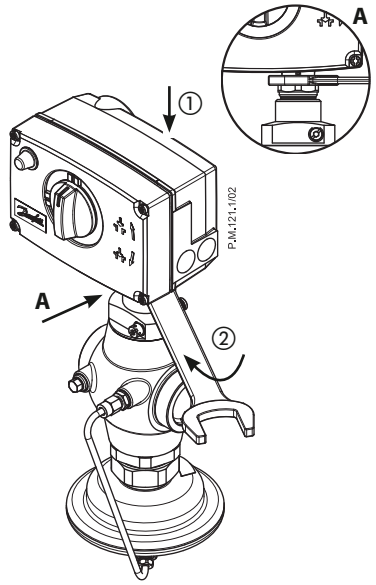

❹

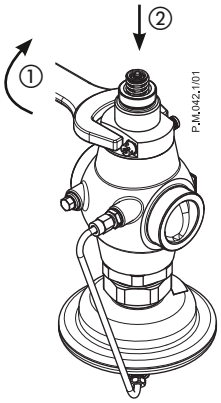

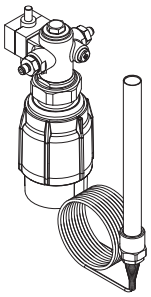

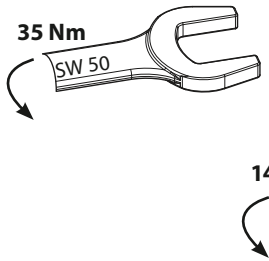

PN 25	STL	M1, M2

❶

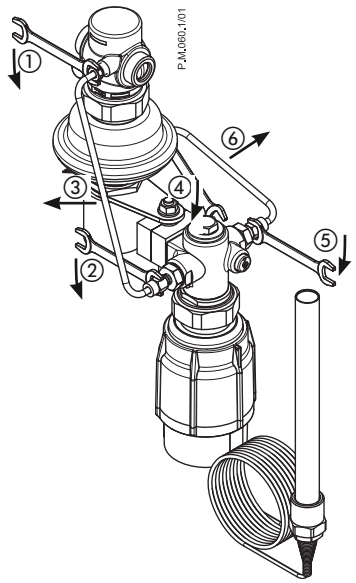

❷

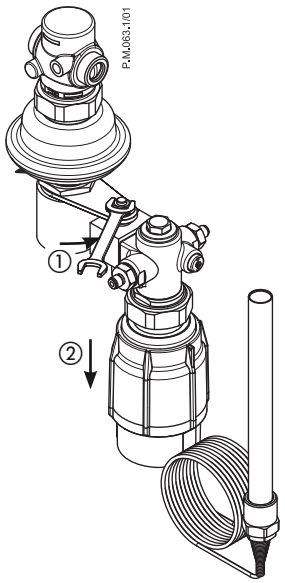

❸

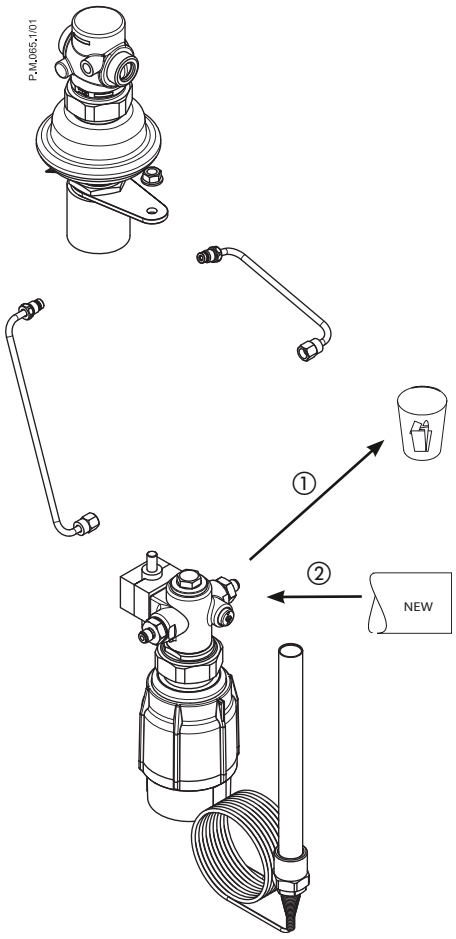

❺

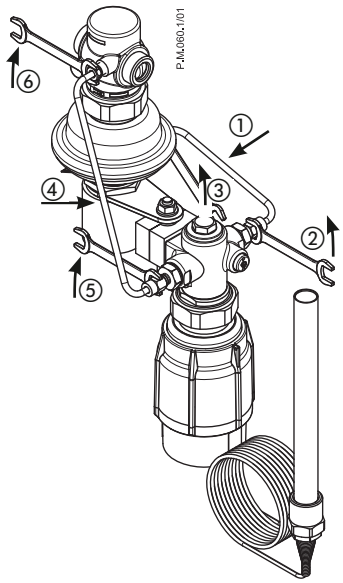

❹

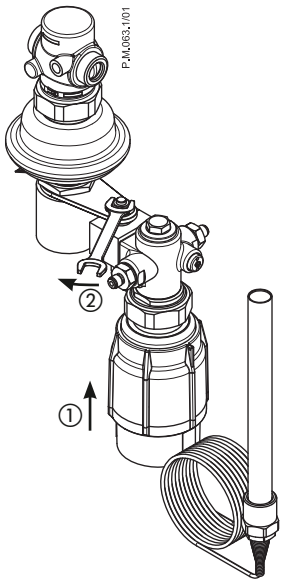

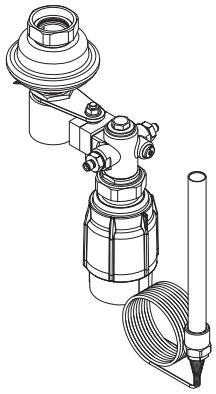

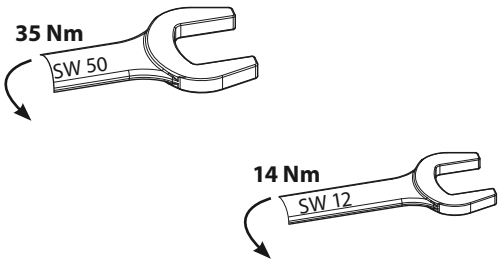

PN 25	STL	M1, M2

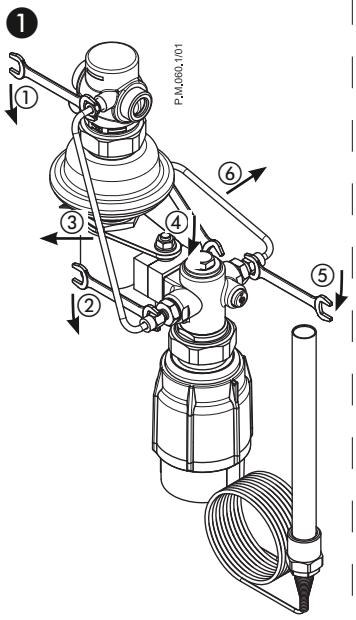

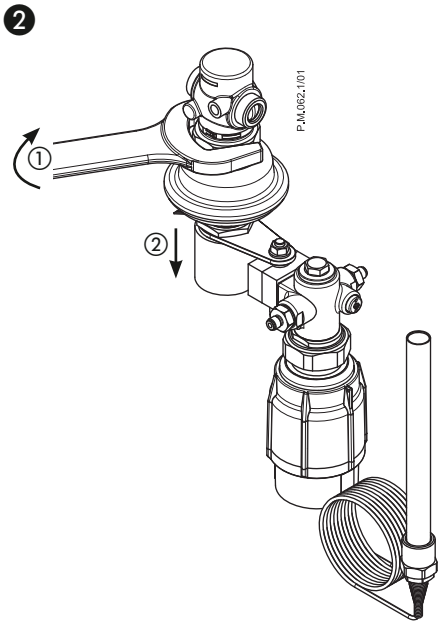

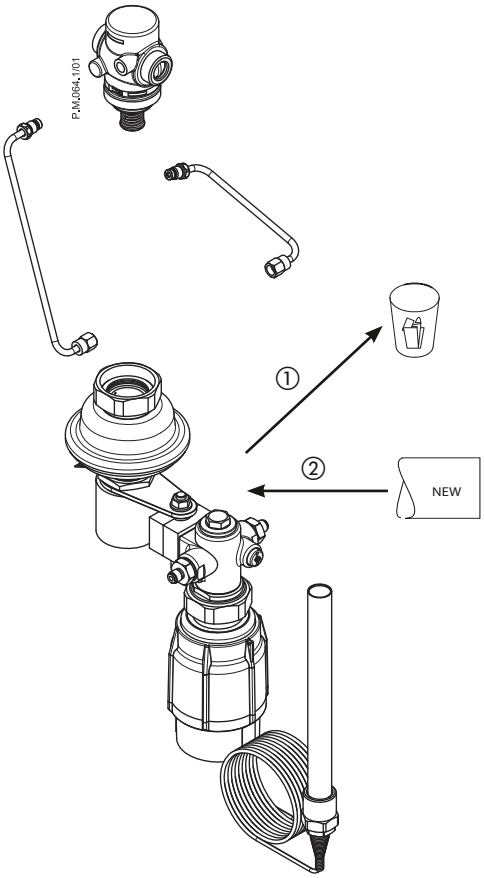

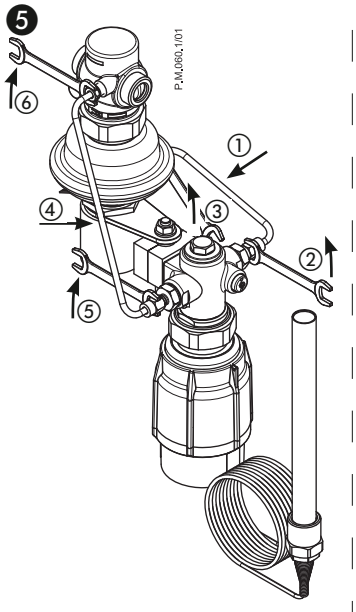

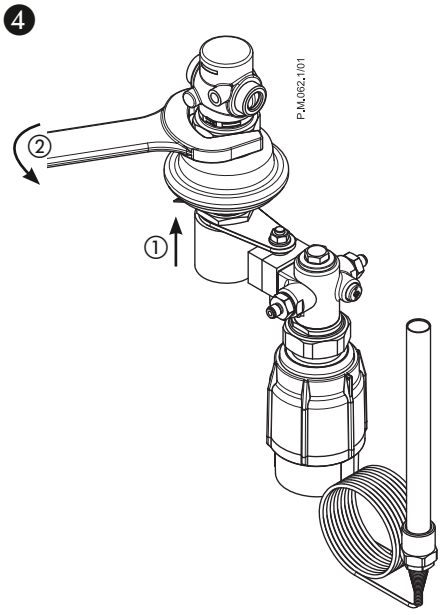

Danfoss can accept no responsibility for possible errors in catalogues, brochures and other printed material. Danfoss reserves the right to alter its products without notice. This also applies to products already on order provided that such alterations can be made without subsequential changes being necessary in specifications already agreed.
All trademarks in this material are property of the respective companies. Danfoss and the Danfoss logotype are trademarks of Danfoss A/S. All rights reserved.

Produced by Danfoss A/S © 03/2012