Библиотека СОК

dixell

iCHiLL

IC200CX Series

User manual

INDEX

1 GENERAL ADVICE 6

2 GENERAL FEATURES 6

2.1 MAIN FUNCTION 6

3 IC200 CX TABLE OF THE FEATURES 8

4 USER INTERFACE 9

4.1 DISPLAY CONFIGURATION 9
4.2 FORCED READ - OUT OF THE TOP AND BOTTOM DISPLAY 11
4.3 ICONS MEANING 12
4.4 MEANING / FUNCTIONNING OF THE BOTTOM DISPLAY LED 13

5 DISPLAY LAYOUT 13

5.1 HOW TO READ THE MEASUREMENT LIST 13
5.2 READ PROBE VALUES OF CIRCUIT 1 OR 2 13

6 DISPLAY INFORMATION 14

6.1 READ THE SET POINT VALUE 14
6.2 MODIFY THE SET POINT 14
6.3 READ THE ACTIVE SETPOINT DURING ENERGY SAVING OR DYNAMIC SETPOINT 14
6.4 DISPLAY VISUALIZATION IN REMOTE OFF 14
6.5 DISPLAY VISUALIZATION IN STD-BY 15
6.6 DISPLAY IN CONDENSING UNIT 15
6.7 KEY FUNCTION 16
6.8 KEY COMBINANTION 16

7 REMOTE TERMINAL 17

8 FIRST INSTALLING 17

8.1 ON BOARD CLOCK (OPTIONAL) 17
8.2 RTC SETUP 17

9 ANALOG AND DIGITAL OUTPUT CONFIGURATION 18

9.1 ANALOG INPUT PB1 - PB2 – PB5 – PB6 18
9.2 ANALOG INPUT CONFIGURATION PB3 - PB4 18
9.3 DIGITAL INPUT CONFIGURATION ID1 – ID18 18
9.4 DIGITAL OUTPUT (RELAY) CONFIGURATION RL1- RL8 19
9.5 ANALOG OUTPUT CONFIGURATION 0 ÷ 10 VOLT (OUT1 E OUT2) 20
9.6 CONFIGURAZIONE N° 2 USCITE ANALOGICHE 0 ÷ 10 VOLT / TAGLIO DI FASE (OUT3 E OUT4) 20

10 PROGRAMMING WITH THE “HOT KEY 64” 21

10.1 DOWNLOAD: HOW TO PROGRAM AN INSTRUMENT WITH A PROGRAMMED “HOT KEY” 21
10.2 UPLOAD: HOW TO PROGRAM A “HOT KEY” WITH THE PARAMETERS OF THE INSTRUMENT 21

11 PROGRAMMING USING THE KEYBOARD 21

11.1 PASSWORD DEFAULT VALUES 21
11.2 ENTER THE PR1 - PR2 - PR3 PROGRAMMING LEVELS 21
11.3 HOW TO CHANGE A PARAMETER VALUE 21
11.4 CHANGE THE PASSWORD VALUE 22
11.5 ENTER THE PROGRAMMING LEVEL PR1 22
11.6 ENTER THE PROGRAMMING LEVEL PR2 22
11.7 ENTER THE PROGRAMMING LEVEL PR3 23
11.8 MOVE A PARAMETER LEVEL FROM PR2 TO PR1 23
11.9 MOVE A PARAMETER FROM PR3 TO PR2 TO PR1 24
11.10 VISIBILITY AND PARAMETER VALUE LOCKED 24
11.11 PROGRAMMING: DIGITAL INPUT AND OUTPUT POLARITY 24
11.12 CHANGE THE POLARITY OF THE DIGITAL INPUTS-OUTPUTS 25

12 FUNCTION MENU " M" KEY 25

12.1 ALARM LIST: SHOW AND RESET 25
12.2 COMPRESSOR OVERLOAD ALARM RESET 25
12.3 COMPRESSOR OVERLOAD PASSWORD. 26
12.4 ALARM LOG LIST 26
12.5 ERASE THE ALARM LOG LIST 26
12.6 PASSWORD VALUE OF THE ALARM LIST 26
12.7 DISABLE – ENABLE A SINGLE CIRCUIT 26
12.8 READ-OUT OF A CIRCUIT NOT ENABLED 26
12.9 ENABLE OR DISABLE A SINGLE COMPRESSOR 26
12.10 READ-OUT OF A COMPRESSOR NOT ENABLED 27
12.11 READ-OUT OF THE COMPRESSOR DISCHARGE TEMPERATURE PROBE 27
12.12 READ-OUT OF THE RUNNING HOURS 27
12.13 RESET THE RUNNING HOUR 27
12.14 READ-OUT OF THE COMPRESSOR STARTS-UP 27
12.15 RESET THE STARTS-UP NUMBER 27
12.16 READ-OUT OF THE PROPORTIONAL OUTPUT PERCENTAGE OF THE CONDENSER FAN CONTROL 27
12.17 READ-OUT OF THE FOUR PROPORTIONAL OUTPUT 28
12.18 READ-OUT OF THE TIME COUNTING TO THE NEXT DEFROST 28
12.19 READ-OUT OF THE PROBES CONFIGURED TO CONTROL AN AUXILIARY OUTPUT RELAY 28
12.20 HOW TO DISPLAY THE TEMPERATURE OF THE REMOTE KEYBOARD 1 OR 2 28

13 CHILLER / HEAT PUMP SELECTION 29

14 UNIT START - STOP 30

14.1 START – STOP AND STAND- BY FROM KEYBOARD 30
14.2 UNIT START- STOP FROM DIGITAL INPUT 30
14.3 MOTOCONDENSING UNIT START- STOP FROM DIGITAL INPUT 30
14.4 MODE WITH DIGITAL INPUT CONFIGURED AS THERMOREGULATION REQUEST 30
14.5 MODE WITH DIGITAL INPUT CONFIGURED AS CHILLER REQUEST 30
14.6 MODE WITH DIGITAL INPUT CONFIGURATED AS HEAT PUMP REQUEST 31

15 COMPRESSOR THERMOREGULATION 31

15.1 THERMOREGULATION PARAMETER DESCRIPTION 31

16 THERMOREGULATION: PROPORTIONAL OR NEUTRAL ZONE 32

16.1 GRAPH OF THE COMPRESSOR THERMOREGULATION IN CHILLER 32
16.2 GRAPH OF THE COMPRESSOR THERMOREGULATION IN HEAT PUMP 32
16.3 GRAPH NEUTRAL ZONE COMPRESSOR CONTROL 32

17 COMPRESSOR STATUS INTO THE NEUTRAL ZONE 33

17.1 MAXIMUM TIME OF NEUTRAL ZONE STAY WITHOUT INSERTION OF RESOURCES WITH AT LEAS ONE RESOURCE INSERTED 34
17.2 MAXIMUM TIME OF NEUTRAL ZONE STAY WITHOUT THE RESOURCES ROTATION 34
17.3 THERMOREGULATION OF THE COMPRESSOR INVERTER CONTROLLED 34

18 THERMOREGULATION AND COMPRESSORS ROTATION 37

19 SATURATION - CIRCUIT BALANCING 37

20 COMPRESSORS START-UP 37

20.1 COMPRESSORS START- UP 37
20.2 DIRECT START- UP 37
20.3 DIRECT START- UP OF A CAPACITY COMPRESSOR 37
20.4 PART WINDING 38
20.5 PART WINDING START- UP OF COMPRESSORS OR CAPACITY COMPRESSORS 38

21 CAPACITY CONTROL 38

21.1 MINIMUM LOAD START- UP 39
21.2 BY- PASS GAS VALVE DURING COMPRESSOR START- UP 40
21.3 SOLENOID VALVE INTERMITTENT FOR SCREW COMPRESSOR 40

22 THERMOREGULATION OF THE COMPRESSORS WITH DIFFERENT SIZE 40

23 PUMP DOWN 40

23.1 OFF UNIT WITH PUMP DOWN AND WITH LOW PRESSURE SWITCH CONTROL 40
23.2 PUMP DOWN WITH DEDICATED PRESSURE SWITCH 41
23.3 PUMP DOWN FUNCTION WITH DEDICATED PRESSURE PROBE 41
23.4 PUMP DOWN ALARM DURING COMPRESSORS START- UP 42
23.5 PUMP DOWN ALARM DURING COMPRESSORS SWITCHING OFF 42
23.6 PUMP DOWN BY DELAY TIME 42

24 UNLOADING 43

24.1 HIGH TEMPERATURE OF THE EVAPORATOR WATER INLET 43
24.2 UNLOADING DESCRIPTION 43
24.3 UNLOADING INFORMATION 43
24.4 UNLOADING WITH PRESSURE / CONDENSING TEMPERATURE OR EVAPORATING PRESSURE CONTROL 43
24.5 REGULATION IN CHILLER MODE 43
24.6 REGULATION IN HEAT PUMP MODE 44
24.7 LOW TEMPERATURE OF THE EVAPORATOR WATER OUTLET 44

25 SOLENOID VALVE FOR LIQUID INJECTION 44

25.1 FUNCTIONNING 44

26 WATER PUMP OF THE EVAPORATOR / SUPPLY FAN 44

26.1 WATER PUMP OF THE EVAPORATOR / SUPPLY FAN (AIR/AIR UNIT) 44
26.2 HOT START (SUPPLY FAN) ONLY FOR AIR / AIR UNIT IN HEAT PUMP MODE 45
26.3 SUPPLY FAN OPERATION WITH DIGITAL INPUT AND RTC 45

27 EVAPORATOR PUMP GROUP 45

27.1 EVAPORATOR WATER PUMP ROTATION 45
27.2 EVAPORATOR WATER PUMP ROTATION THROUGH DIGITAL INPUT CONTROL 45

28 WATER PUMP OF THE CONDENSER 46

28.1 CONDENSER WATER PUMP CONTROL 46

29 PUMP GROUP OF THE CONDENSER 46

29.1 CONDENSER WATER PUMP ROTATION 46
29.2 CONDENSER WATER PUMP ROTATION THROUGH DIGITAL INPUT CONTROL 47

30 MODULATING OPERATION OF THE PUMPS 47

31 CONDENSER FAN REGULATION 48

31.1 ON/OFF CONDENSER FAN 49
31.2 PROPORTIONAL FAN CONTROL (PWM OR 0..10V) 49
31.3 CONDENSING UNIT: COMMON OR SEPARATE 49
31.4 GRAPH: PROPORTIONAL REGULATION OF CONDENSER FANS 50
31.5 GRAPH: ON / OFF REGULATION OF THE CONDENSER FAN IN CHILLER MODE 50
31.6 GRAPH: ON / OFF REGULATION OF THE CONDENSER FAN IN HEAT PUMP MODE 50

32 THERMOREGULATION OF THE ANTI FREEZE, INTEGRATION HEATING OR BOILER 51

32.1 THERMOREGULATION OF THE HEATERS IN CHILLER 51
32.2 THERMOREGULATION OF THE HEATERS IN HEAT PUMP 51
32.3 THERMOREGULATION OF THE SUPPORT HEATERS FOR AIR/AIR UNIT 51
32.4 CONDENSER ANTI-FREEZE HEATERS REGULATION 51
32.5 GRAPH OF THE ANTI-FREEZE- INTEGRATION HEATING - BOILER HEATER RELAYS 52
32.6 BOILER FUNCTION 52

33 DEFROST CYCLE 53

33.1 FORCED DEFROST 53
33.2 COMBINED DEFROST 53
33.3 MANUAL DEFROST 53
33.4 DEFROST START CONDITION WITH TWO CIRCUIT UNIT 53
33.5 START/STOP DEFROST IN A TWO CIRCUITS UNIT WITH ONE CONDENSING FAN CONTROL UNIT 53
33.6 START/STOP DEFROST IN A TWO CIRCUITS UNIT WITH TWO CONDENSING FAN CONTROL UNIT 53
33.7 AUTOMATIC DEFROST PROCEDURE 54
33.8 OTHER INFORMATION ABOUT THE DEFROST 55
33.9 DEFROST BY CONDENSER FAN 55

33.10 END DEFROST BY LOW WATER OUTLET EVAPORATOR TEMPERATURE 55
33.11 DEFROST PARAMETER DESCRIPTION 55

34 ENERGY SAVING 57

34.1 ENERGY SAVING: DIGITAL INPUT ACTIVATION 57
34.2 ENERGY SAVING TIME TABLE WITH RTC 57
34.3 RTC DAILY TIME TABLE PROGRAMMING 57
34.4 ENERGY SAVING OR UNIT ON/OFF ACTIVATION WITH RTC PROGRAMMING 57
34.5 UNIT ON/OFF ACTIVATION WITH RTC PROGRAMMING AND DIGITAL INPUT 58

35 DYNAMIC SETPOINT 59

35.1 DYNAMIC SETPOINT GRAPH 59

36 GEOTHERMAL FUNCTION 60

37 AUXILIARY FUNCTION 61

37.1 AUXILIARY FUNCTION ON RELAY OUTPUT 61
37.1.1 Auxiliary relay on Direct action 61
37.1.2 Auxiliary relay on reverse action....62
37.2 AUXILIARY FUNCTION ON ANALOG OUTPUTS 62

38 LOAD MAINTENANCE 63

38.1 LOAD MAINTENANCE RESQUESTS 63

39 MESSAGES - ALARM CODES 64

39.1 AP1 - AP2 - AP3 - AP4 - AP5 - AP6 - AP7 - AP8 PROBE FAILURE 64
39.2 AEFL: EVAPORATOR FLOW ALARM (DIFFERENTIAL PRESSURE SWITCH) 64
39.3 ACFL: CONDENSER FLOW ALARM (DIFFERENTIAL PRESSURE SWITCH) 64
39.4 ATSF: OVERLOAD ALARM OF THE SUPPLY FAN 65
39.5 ATE1 - ATE2 EVAPORATOR PUMP OVERLOAD ALARM 65
39.6 ATC1 - ATC2 CONDENSER PUMP OVERLOAD ALARM 65
39.7 AEE EEPROM ALARM 65
39.8 AFR: POWER SUPPLY FREQUENCY ALARM 66
39.9 ALC1: GENERIC ALARM WITH STOP REGULATION 66
39.10 ALC2: GENERIC SIGNAL ALARM 66
39.11 ALC2: GENERIC ALARM WITH STOP REGULATION 66
39.12 ACF1 - ACF2 - ACF3 - ACF4 - ACF5 - ACF6 - ACF7 - ACF8 - ACF9 – ACF10 – ACF11 CONFIGURATION ALARM OF THE UNIT 67
39.13 ARTF CLOCK FAILURE 69
39.14 ARTC CLOCK ALARM 69
39.15 AEUN: UNLOADING FROM HIGH TEMPERATURE OF THE EVAPORATOR WATER INLET 69
39.16 AEHT: ALARM FROM HIGH TEMPERATURE OF THE EVAPORATOR WATER INLET 69
39.17 AELT LOW WATER TEMPERATURE INLET (ONLY HEAT PUMP) 69
39.18 AEDT DIFFERENTIAL ALARM EVAPORATOR WATER INLET – OUTLET TEMPERATURE 70
39.19 ALTI: LOW AIR AMBIENT TEMPERATURE (AIR / AIR UNIT ONLY) 70
39.20 AEP1 - AEP2 EVAPORATOR PUMPS / SUPPLY FAN MAINTENANCE REQUEST 71
39.21 ACP1 - ACP12 CONDENSER PUMPS MAINTENANCE REQUEST 71
39.22 B1HP - B2HP HIGH PRESSURE SWITCH CIRCUIT 1 AND 2 71
39.23 B1LP - B2LP LOW TEMPERATURE / LOW CONDENSING PRESSURE OF THE CIRCUIT 72
39.24 B1AC - B2AC - B1AC - B2AC ANTIFREEZE ALARM / LOW OUTLET TEMPERATURE (AIR / AIR UNIT IN CHILLER MODE) 72
39.25 B1AH - B2AH ANTI-FREEZE ALARM / LOW OUTLET AIR TEMPERAURE(AIR/AIR UNIT ONLY) ON HEAT PUMP MODE 72
39.26 B1HP - B2HP HIGH CONDENSING PRESSURE / TEMPERATURE OF THE CIRCUIT 73
39.27 B1LP - B2LP LOW PRESSURE SWITCH CIRCUIT #1 OR 2 73
39.28 B1LP - B2LP LOW EVAPORATING PRESSURE OF THE CIRCUIT (WITH PRESSURE TRANSDUCERS ONLY) 73
39.29 B1TF- B2TF CONDENSER FAN OVERLOAD ALARM 73
39.30 B1EU – B2EU: UNLOADING FROM LOW TEMPERATURE OF THE EVAPORATOR WATER OUTLET 74
39.31 C1HP - C2HP COMPRESSOR HIGH PRESSURE ALARMS 74
39.32 C1OP - C2OP PRESSURE SWITCH ALARM / COMPRESSOR OIL 74
39.33 C1DT - C2DT HIGH COMPRESSOR DISCHARGE TEMPERATURE ALARM 74
39.34 C1TR - C2TR COMPRESSOR OVERLOAD ALARM 75
39.35 B1DF – B2DF DEFROST ALARM 75
39.36 B1CU – B2CU UNLOADING: HIGH CONDENSING TEMPERATURE / PRESSURE IN CHILLER 75
39.37 B1CU – B2CU: UNLOADING: LOW CONDENSING TEMPERATURE / PRESSURE IN HEAT PUMP 75
39.38 B1PH - B2PH: PUMP DOWN STOP ALARM FROM PRESSURE SWITCH / LOW PRESSURE SWITCH 76
39.39 B1PL - B2PL ALARM DURING THE PUMP DOWN START-UP FROM PUMP DOWN PRESSURE SWITCH / LOW PRESSURE TRANSDUCER 76
39.40 C1MN - C2MN COMPRESSOR MAINTENANCE 76
39.41 ALARM RELAY AND BUZZER 77

39.42 KEYABOARD ALARM 77

40 AUTOMATIC TO MANUAL ALARM PROCEDURE 77

41 TABLE OF THE OUTPUT STATUS IN ALARM CONDITION 78

41.1 ALARM: “A” TYPE AND STATUS OF THE LOADS IN CASE OF ALARM 78
41.2 ALARM: “B” TYPE AND STATUS OF THE LOADS IN CASE OF ALARM 79
41.3 ALARM: “C” TYPE AND STATUS OF THE LOADS IN CASE OF ALARM 79

42 TABLE OF THE PARAMETERS 81

43 BLACK-OUT 99

44 WIRING CONNECTIONS 99

44.1 HARDWARE RESOURCES FOR IC206CX MODEL 99
44.2 HARDWARE RESOURCES FOR 208CX MODELS 100
44.3 ANALOG INPUTS NTC – PTC PROBES 100
44.4 DIGITAL INPUTS 101
44.5 ANALOG INPUT FOR PRESSURE TRANSDUCER PP30 (4 ÷ 20MA SIGNAL) 101
44.6 ANALOG INPUT FOR PRESSURE RATIOMETRIC TRANSDUCER PPR30 (0 ÷ 5V SIGNAL) 102

45 PWM OUTPUT FOR CONDENSING FAN SPEED CONTROL 103

45.1 PROPORTIONAL OUTPUT FOR FAN CONDENSING CONTROL OR FOR COMPRESSOR INVERTER CONTROLLED OR FOR AUXILIARY OUTPUTS 103
45.2 PROPORTIONAL OUTPUTS CONFIGURED FOR AUX RELAY CONTROL 104
45.3 HOT KEY 64 CONNECTION 104
45.4 XJ485CX CONNECTION 105
45.5 REMOTE KEYBOARD VI620CX 106

46 INSTALLING AND MOUNTING 106

46.1 PANEL CUT- OUT 106
46.2 VERTICAL BOARDS VI620CX PANEL CUT-OUT 107

47 ELECTRICAL CONNECTIONS 108

48 ACCESSORIES 108

48.1 MONOPHASE FAN CONTROL: 230VAC AND CUT PHASE CONTROL 108
48.2 WIRING KIT 109
48.3 TRANSFORMER 109
48.4 XJ485CX 109
48.5 RT314 KIT 109
48.6 HOT KEY: 109

49 TECHNICAL DATA 110

1 GENERAL ADVICE

PLEASE READ BEFORE USING THIS MANUAL

- This manual is part of the product and should be kept near the instrument for easy and quick reference.
- The instrument shall not be used for purposes different from those described hereunder. It cannot be used as a safety device.
- Check the application limits before proceeding.

SAFETY PRECAUTIONS

- Check the supply voltage is correct before connecting the instrument.
- Do not expose to water or moisture: use the controller only within the operating limits avoiding sudden temperature changes with high atmospheric humidity to prevent formation of condensation
- Warning: disconnect all electrical connections before any kind of maintenance.
- The instrument must not be opened.
- In case of failure or faulty operation send the instrument back to the distributor or to “Dixell s.r.l.” (see address) with a detailed description of the fault.
- Consider the maximum current which can be applied to each relay (see thechnical Data).
- Ensure that the wires for probes, loads and the power supply are separated and far enough from each other, without crossing or intertwining.
- Fit the probe where it is not accessible by the end user.
- In case of applications in industrial environments, the use of mains filters (our mod. FT1) in parallel with inductive loads could be useful.

2 GENERAL FEATURES

iCHILL IC200CX is an electronic controller for chiller unit applications having one or two circuits:
- Air/air
- Air/water
- Water/water
- Motocondensing

Additional features:
- Heat pump with gas reversibility
- Free cooling function
- Recovery function

2.1 MAIN FUNCTION

Chiller management:
- One circuit up to 2 compressors (max 1 capacity step per compressor)
- Two circuits with 1 compressor per circuit (max 1 capacity step per compressor)
- Screw compressors
- Compressor inverter controlled

Compressor start up:
- Direct
- Part winding

Compressor Soft start:
- With step valve
- Automatic start-unloading (without load)
- External by-pass gas valve

Capacity step control:
- Continuous control
- Step control
- Modulation control (screw compressors)

Thermoregulation of the compressors
- Time running hours
- Number of start-up per hour

Cooling liquid injection
- With dedicated PTC probe (for compressor one only)

High temperature alarm of the compressor discharge side
- With dedicated PTC probe (for compressor one only)

Complete management of two pump groups of the water side
- 2 pumps evaporator side
- 2 pumps condenser side

Display layout customizable
- Temperature
- Pressure
- Time / RTC in real time

Other display readings
- Safety digital inputs
- Compressors running hours
- Number of compressor start-up
- Pump running hours
- Delay counting to the next defrost
- Proportional output percentage status
- Compressors discharge temperature

Alarm reset with custom password
- Alarm list
- Compressor thermal protection alarm

Pump down management
- With dedicated pressure switch
- With low pressure switch
- With low pressure transducer

Unloading circuit
- High temperature of the evaporator inlet water
- High temperature of the condenser inlet water (unit with recovery)
- High condensing pressure
- Low evaporating pressure

Maintenance messages
- Compressors
- Evaporator pumps
- Condenser pumps

Weekly Energy saving

- Three different time bands per day (only for controller with RTC onboard)
- From digital input

Weekly ON/OFF:

- Three different time bands per day (only with RTC onboard)

Dynamic setpoint:

- Determined by analogue NTC input or 4÷20mA current input.

Change over :

- Automatic chiller or heat pump functioning depending from NTC analogue input

Remote OFF:

- From configurable digital input

Remote change over:

- From configurable digital input

Hot start :

- Only for air / air unit

Defrost management:

- Combined control with temperature and pressure
- Forced defrost with low temperature of external air
- From configurable digital input
- Manual from keyboard

Boiler:

- For electrical integration heating or anti-freeze heaters

Proportional signal for condensing fan speed control (inverter or cut of phase):

- PWM
- 0÷10Volt
- 4÷20mA

Proportional outputs 0÷10V or ON/OFF

- To control the dumper in geothermal application or for auxiliary outputs
- To control an external relay

Complete alarm management

- Internal Data logger up to 100 events

Supervisor / tele assistance/ monitoring

- TTL output for XJ485CX interface (ModBus protocol) for Dixell monitoring system for local and remote control

Up to 2 remote terminals

- With NTC ambient temperature probe

3 IC200 CX TABLE OF THE FEATURES

CHARACTERISTICS	IC206CX	IC208CX
N° KEYS		
6	●	●
RELAYS		
6	●	
8		●
DIGITAL INPUTS		
11	Config	Config
ANALOG INPUTS		
4 NTC – PTC 2 NTC - PTC - 4÷20mA - 0 ÷ 5Volt	Config	Config
PROPORTIONAL OUTPUTS		
2 configurables (signal 0÷10V)	Config	Config
2 configurables (signal 0÷10V, PWM)	Config	Config
SERIAL OUTPUTS		
TTL with Mod-BusRtu protocol	●	●
Remote Keyboard VICX620 (up to 2 remote keyboards with probe on board)	●	●
POWER SUPPLY		
12 Vac/dc (+15%;-10%)	●	●
24 Vac/dc (± 10%)	Opt	Opt
MAIN DISPLAY (UPPER DISPLAY)		
± 4 digits with decimal point	●	●
SECONDARY DISPLAY (LOWER DISPLAY)		
± 4 digits with decimal point	●	●
OTHER		
Clock on board	Opt	Opt
Buzzer	Opt	Opt

- configurable = configurable through parameter
- opt = optional
- ● = default

4 USER INTERFACE

4.1 DISPLAY CONFIGURATION

IC 206CX / IC 208CX

Remote keyboard

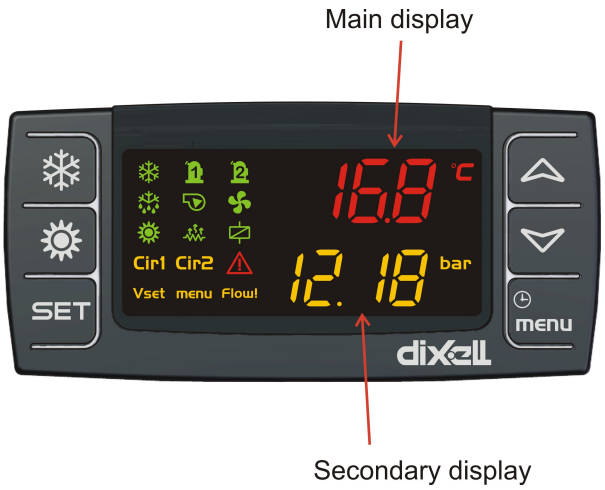

Main display (upper display)

Parameters dP01 (IC200CX), dP05 (remote keyboard n°1), dP07 (remote keyboard n°2)

PARAMETER VALUE	DESCRIPTION	CORRESPONDING LABEL
0	No display read out	**No label**
1	NTC temperature probe of the evaporator water inlet	**Ein**
2	NTC temperature probe of the evaporator water outlet 1 and 2	**Out1** circuit 1 **Out2** circuit 2
3	NTC temperature probe of the common evaporator water outlet	**Eout**
4	NTC temperature probe of the condenser water inlet	**Cln1** circuit 1 **Cln2** circuit 2
5	NTC temperature probe of the common condenser water inlet	**Cin**
6	NTC temperature probe of the condenser water outlet	**Cou1** circuit 1 **Cou2** circuit 2
7	NTC temperature probe of the common condenser water outlet	**Cout**
8	NTC temperature probe of the dynamic setpoint	**Et**
9	NTC temperature probe of the remote terminal 1	**trE1**
10	NTC temperature probe of the remote terminal 2	**trE2**
11	NTC temperature probe for the combined defrost	**dEF1** circuit 1 **dEF2** circuit 2
12	NTC temperature probe of the condenser	**Cdt1** circuit 1 **Cdt2** circuit 2
13	Set point (set point chiller or set point heat pump when the controller is ON; “OFF” when the controller is OFF or STD-BY)	
14	Differential of regulation in chiller or heat pump	
15	Machine status (OFF / OnC=ON chiller / OnH=ON heat pump)	

Secondary display (lower display)

Parameters dP02 (IC200CX), dP06 (remote keyboard n°1), dP08 (remote keyboard n°2)

PARAMETER VALUE	DESCRIPTION	CORRESPONDING LABEL
0	No display read out	**No label**
1	NTC temperature probe of the evaporator water inlet	**Ein**
2	NTC temperature probe of the evaporator water outlet 1 and 2	**Out1** circuit 1 **Out2** circuit 2
3	NTC temperature probe of the common evaporator water outlet	**Eout**
4	NTC temperature probe of the condenser water inlet	**Cln1** circuit 1 **Cln2** circuit 2
5	NTC temperature probe of the common condenser water inlet	**Cin**
6	NTC temperature probe of the condenser water outlet	**Cou1** circuit 1 **Cou2** circuit 2
7	NTC temperature probe of the common condenser water outlet	**Cout**
8	NTC temperature probe of the dynamic setpoint	**Et**
9	NTC temperature probe of the remote terminal 1	**trE1**
10	NTC temperature probe of the remote terminal 2	**trE2**
11	NTC temperature probe for the combined defrost	**dEF1** circuit 1 **dEF2** circuit 2
12	NTC temperature probe of the condenser	**Cdt1** circuit 1 **Cdt2** circuit 2
13	Set point (set point chiller or set point heat pump when the controller is ON; “OFF” when the controller is OFF or STD-BY)	
14	Differential of regulation in chiller or heat pump	
15	Machine status (OFF / OnC=ON chiller / OnH=ON heat pump)	
16	Pressure probe of the condenser	**CdP1** circuit 1 **CdP2** circuit 2
17	Pressure probe of the evaporator	**LP1** circuit 1 **LP2** circuit 2
18	Clock	

4.2 FORCED READ - OUT OF THE TOP AND BOTTOM DISPLAY

To force the display read-out:

1. Set the **dP03** parameter different to **0**
2. Select the value range 1..3

These configurations allow to show together two temperatures or two pressures of the same circuit in order to have an easier reading of the measurements:

Par. **dP03 = 1**

Top display: for both the circuits 1,2:

- Evaporator water inlet, with the **Ein** label.

Bottom display: circuit 1:

- Evaporator 1 water outlet, with the label **OuT1**

Bottom display: circuit 2:

- Evaporator 2 water outlet, with the label **OuT2.**

Par. **dP03 = 2**

Top display of the circuit 1:

- Condenser 1 water inlet temperature with the label **Cln1**

Bottom display of the circuit 1

- Condenser 1water outlet with the label **COu1.**

Top display of the circuit 2:

Condenser 2 water inlet temperature with the label **Cin2**

Bottom display of the circuit 2

- Condenser 2water outlet with the label **Cou2**.

Par. **dP03 = 3**

Top display of the circuit 1:

- Condenser probe temperature **Cdt1** / pressure **CdP1**

Bottom display of the circuit 1

- Evaporator pressure probe **LP1**

Top display of the circuit 2:
Condenser probe temperature **Cdt2** / pressure **CdP2**
Bottom display of the circuit 2
Evaporator pressure probe **LP2**

4.3 ICONS MEANING

ICON	MEANING / FUNCTIONNING
°C - °F BAR-PSI	Lighted when the display shows a temperature or pressure
1 2	Lighted when a compressor is activated Blinking = when the delay of activation is running
	Alarm: blinking in case of alarm
	Lighted if anti freeze heaters/ integration heating / boiler are activated
Flow!	Flow alarm/ (differential) pressure switch / supply fan thermal (air / air unit): is blinking if the configuration of the digital input is active
	Lighted when the bottom display shows the RTC Lighted during the programming parameters if it is time based Lighted in function menu when the display shows the defrost delay
	Water pump: lighted if at least one pump is activated
	Condenser fan: lighted if at least one fan is active
Vset	Lighted if Dynamic set point or Energy saving are active
menu	Lighted during menu navigation
	Lighted if auxiliary ouput is active
	Lighted when the controller is ON
Cir1 Cir2	Lighted when the display shows probes values of circuit 1 or circuit 2
	Lighted when the defrost is activated Blinking during the counting of the interval between defrost

4.4 MEANING / FUNCTIONNING OF THE BOTTOM DISPLAY LED

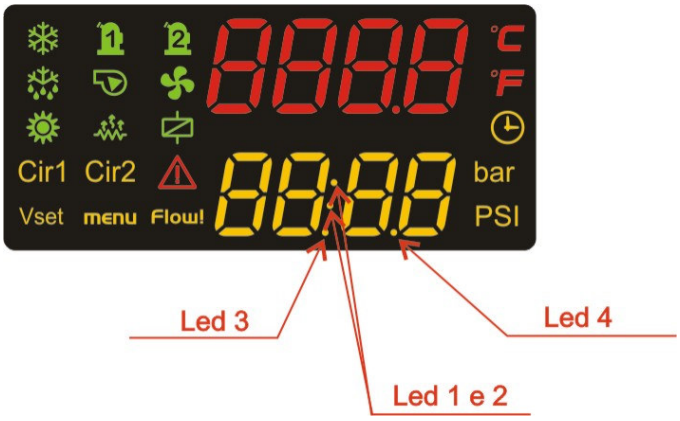

Led # 1 – 2 (With RTC)
If the bottom display shows the RTC the leds are both blinking.

Led # 1 – 2 In function Menu
During the time counting to the next defrost for one or both circuits the leds are both blinking.

LED during parameters programming
In Pr2 level: led #3 indicates the visibility of the parameter; the led #1 and #2 show if the parameter can be modified or not.
In Pr3 level: led #3 and #4 indicate the visibility of the parameter; the led #1 and #2 show if the parameter can be modified or not.

5 DISPLAY LAYOUT

5.1 HOW TO READ THE MEASUREMENT LIST

With the icon Cir1 on, push UP or Down keys to display the labels of the information of the circuit 1.
With the icon Cir2 on, push UP or Down keys to display the labels of the information of the circuit 2.
Each measurement is defined by a label that indicates which if it is a pressure a temperature or a time.

5.2 READ PROBE VALUES OF CIRCUIT 1 OR 2

To swap between the information of the two circuits use the UP and DOWN key to select a label then push SET, check the led.

Example in fig.1
Icon Cir1 is on: the top display shows the value of the output evaporator temperature (12.8°C) of the circuit 1; the bottom display shows Out 1 (outlet temperature evaporator 1). Push SET key to swap to the circuit 2. **Fig2**
Icon Cir2 is on: the top display shows the value of the output evaporator temperature (11.7°C) of the circuit 2, the bottom display shows Out 2.

Fig.1

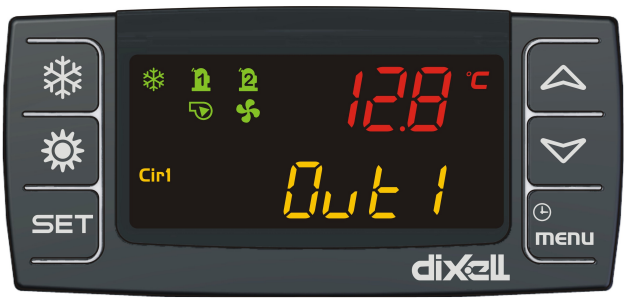

Fig.2

6 DISPLAY INFORMATION

6.1 READ THE SET POINT VALUE

Push and release the **SET** key, the set value is displayed.
In stand-by the bottom display shows **SetC** (set chiller), by pushing SET again the next label is **SetH** (set heat pump).
If the unit is running the only set displayed is related to the running mode.

6.2 MODIFY THE SET POINT

1) Push **SET** key for at least **3** seconds
2) Use the **UP** or **DOWN** key to modify the setpoint. In chiller it is possible to modify the chiller set point, in heat pump it is possible to modify the heat pump set point, in std-by it is possible to modify both the set point.
3) Push **SET** to confirm or wait the timeout (15seconds).

6.3 READ THE ACTIVE SETPOINT DURING ENERGY SAVING OR DYNAMIC SETPOINT

If the unit is running in chiller or heat pump, the Energy Saving or the Dinamic Setpoint activity is signalled by the blinking of the Vset icon.

Chiller mode: push **SET** one time, the bottom display shows the **SEtC** (set chiller) while the top display shows the set value. Only if the Energy saving or the Dynamic Setpoint are active, pushing another time the **SET** key, the bottom display shows **"SEtr"** (real setpoint), and the top display shows the setpoint that the unit is really using for the thermoregulation.
Heat pump mode: push **SET** one time, the bottom display shows the **SEtH** (set Heat pump) while the top display shows the set value. Only if the Energy saving or the Dynamic Setpoint are active, pushing another time the **SET** key, the bottom display shows **"SEtr"** (real setpoint), and the top diplay shows the setpoint that the unit is really using for the thermoregulation.

6.4 DISPLAY VISUALIZATION IN REMOTE OFF

Digital input configured as remote ON/OFF: the active input sets the unit in OFF (even when the unit is a condensing unit).
The upper display shows **"OF.F** ", the led of the decimal point is blinking.

6.5 DISPLAY VISUALIZATION IN STD-BY

It is possible to customise the visualization of the display when the unit is in STD-BY:
Parameter dP4:
0= the display shows "STD-BY"
1= the display shows what defined by parameters dP1 and dP2
2= the display shows “OFF”

dP4=0

dP4=1
The display shows what defined by parameters dP1 and dP2

dP4=2

6.6 DISPLAY IN CONDENSING UNIT

If the controller is configured to manage a condensing unit (CF03=1):

- one digital input has to be configured as “chiller request”; if the digital input is active the unit works in chiller mode and the display visualizes OnC
- one digital input can be configured as “heat pump request”; if the digital input is active the unit works in heat pump mode and the display visualizes OnH

Another possibility is to configure the controller to manage a motorcondensing unit (CF03=1) and one digital input is configured as “thermoregulation request”:

- if the digital input is active:
  - by keyboard it is possible to switch on the unit in chiller mode and the display shows OnC; by keyboard it is possible to select the STD-By mode and the display shows On
  - by keyboard it is possible to switch on the unit in heat pump mode and the display shows OnH; by keyboard it is possible to select the STD-By mode and the display shows On
- if the digital input is not active the unit is OFF and the display visualizes OFF

6.7 KEY FUNCTION

KEY	ACTION	FUNCTION
SET	Push and release	Show chiller set point **SetC** and heat pump **SetH**
	Push once again	In chiller or heat pump if the Energy saving or the Dynamic setpoint are enabled it shows the real setpoint **Setr,** the led is blinking.
	Push for 3 seconds	Set point modification
	During the programming: push once	To enter parameter modification or confirm a value
	Push when an alarm is showed in menù ALrM	To reset the alarm
	Push once with probe label showed on the bottom display (press up or down starting from default visualization)	To read probes values of circuit 1 or circuit 2
	Push once	To read probes value
	Pushing once during the programming	To change the group of parameters, to change the parameter, to change the value of the parameter
	Push for 1 second during the programming when the display visualize Pr1 or Pr2	1 time shows the Pr2 programming level 2 times shows the Pr3 programming level
	Push once	To read probes value
	Pushing once during the programming	To change the group of parameters, to change the parameter, to change the value of the parameter
	Push once	To turn ON or turn OFF the controller (in chiller or heat pump depending from CF51 parameter)
	Push once	To turn ON or turn OFF the controller (in chiller or heat pump depending from CF51 parameter)
MENU	Push once	To enter the function Menu
	Push for 3 seconds	To set the clock (controller with clock on board)
	Pushing once during the programming	To exit from a group of parameter

6.8 KEY COMBINANTION

KEY	ACTION	FUNCTION
SET + DOWN	Push for 3 seconds together	Enter the programming parameters
	Only in Pr3 level: push SET and DOWN key	Select the parameter level visibility Pr1 / Pr2 / Pr3
SET + UP	Push once together	Exit the programming parameters
	Push 5 seconds in heat pump mode	Manual defrost
SET + MENU	Only in Pr3 programming level: push SET and then the MENU key	In Pr3 defines if the parameter can be modified or not in the other levels.

7 REMOTE TERMINAL

The iCHILL can be connected to a remote keyboard (max 2 remote keyboards).
The remote keyboard with probe on board can be used for the regulation of the machine.
The maximum length of the cable is 150mt (shielded cable is recommended).
Use the connection cable **CAB**/**CJ30** (2x0.2 mm^2) to interface the ichill connector to the shielded wire.
In case of communication problems (hardware problems or bad connection) the upper display shows "**noL**" (no link).

8 FIRST INSTALLING

8.1 ON BOARD CLOCK (OPTIONAL)

Giving power supply the bottom display shows "**rtC**" alternated to a temperature or pressure value: **It is necessary to set the RTC (Real time clock).**
ATTENTION
The RTC function is an option and it is not possible to update the instrument It is necessary to order the instrument already complete of this features.
With a prolunged power failure (several days) it is necessary to setup the clock again.

8.2 RTC SETUP

1. Push **Menu** key for 3 seconds until the bottom display shows **"Hour**" and the top display shows its value.
2. Push **SET** one time: the value is blinking.
3. Use the Up and Down keys to adjust it. Push **SET** one time to confirm.
4. Push up or down keys and repeat the operations 2. 3. and 4. for all the RTC parameters:

- **Min:** minutes (0÷60)
- **UdAy:** day of the week **(Sun** = Sunday, **Mon** =Monday, **tuE** =Tuesday, **UEd** = Wednesday, **tHu** = Thursday, **Fri** =Friday, **SAt** =Saturday)
- **dAy:** day of the month (0÷31)
- **MntH:** month (1÷12)
- **yEAr:** year (00÷99)

9 ANALOG AND DIGITAL OUTPUT CONFIGURATION

9.1 ANALOG INPUT PB1 - PB2 – PB5 – PB6

Parameters involved:
CF08 = Configuration PB1
CF09 = Configuration PB2
CF12 = Configuration PB5
CF13 = Configuration PB6

0. Not enabled
1. Temperature probe **PTC** for compressor #1 discharge
2. Temperature probe **NTC** for evaporator inlet
3. Temperature probe **NTC** for evaporator #1 outlet
4. Temperature probe **NTC** for evaporator #2 outlet
5. Temperature probe **NTC** for common evaporator outlet
6. Temperature probe **NTC** for common hot water condenser inlet
7. Temperature probe **NTC** for hot water of the condenser circuit #1 inlet
8. Temperature probe **NTC** for hot water of the condenser circuit #2 inlet
9. Temperature probe **NTC** for hot water of the condenser circuit #1 outlet
10. Temperature probe **NTC** for hot water of the condenser circuit #2 outlet
11. Temperature probe **NTC** for hot water of the condenser common outlet
12. Temperature probe **NTC** (external temperature) for dynamic setpoint / boiler / change over
13. Temperature probe **NTC** for combined defrost circuit #1
14. Temperature probe **NTC** for combined defrost circuit #2
15. Temperature probe **NTC** for auxiliary output #1
16. Temperature probe **NTC** for auxiliary output #2
17. Temperature probe **NTC** for condensing circuit #1
18. Temperature probe **NTC** for condensing circuit #2

Every analogue input can be configured as digital input; after the number 18, the values **o 1** … **c38** allow the configuration of the analogue input as digital inputs with the same meaning (o 1= remote ON/OFF, o 2= Remote chiller / heat pump, …..).

9.2 ANALOG INPUT CONFIGURATION PB3 - PB4

Parameter involved:
CF10 = Configuration PB3
CF11 = Configuration PB4

0 Not enabled
1 Temperature probe **PTC** for compressor #1 discharge
2 Temperature probe **NTC** for evaporator inlet
3 Temperature probe **NTC** for evaporator #1 outlet
4 Temperature probe **NTC** for evaporator #2 outlet
5 Temperature probe **NTC** for common evaporator outlet
6 Temperature probe **NTC** for common hot water condenser inlet
7 Temperature probe **NTC** for hot water of the condenser circuit #1 inlet
8 Temperature probe **NTC** for hot water of the condenser circuit #2 inlet
9 Temperature probe **NTC** for hot water of the condenser circuit #1 outlet
10 Temperature probe **NTC** for hot water of the condenser circuit #2 outlet
11 Temperature probe **NTC** for hot water of the condenser common outlet
12 Temperature probe **NTC** (external temperature) for dynamic setpoint / boiler / change over
13 Temperature probe **NTC** for combined defrost circuit #1
14 Temperature probe **NTC** for combined defrost circuit #2
15 Temperature probe **NTC** for auxiliary output #1
16 Temperature probe **NTC** for auxiliary output #2
17 Condenser probe circuit 1 (temperature **NTC** / pressure **4÷20 mA** / ratio-metric **0÷ 5Volt**)
18 Condenser probe circuit 2 (temperature **NTC** / pressure **4÷20 mA** / ratio-metric **0÷ 5Volt**)
19 Evaporator pressure probe circuit 1 (pressure **4÷20 mA** / ratio-metric **0÷ 5Volt**)
20 Evaporator pressure probe circuit 1 (pressure **4÷20 mA** / ratio-metric **0÷ 5Volt**)
21 Auxiliary output 1 pressure probe control (**4÷20 mA** / ratio-metric **0÷ 5Volt).**
22 Auxiliary output 2 pressure probe control (**4÷20 mA** / ratio-metric **0÷ 5Volt).**
23 Dynamic setpoint pressure probe (**4÷20 mA)**

Every analogue input can be configured as digital input; after the number 18, the values **o 1** … **c38** allow the configuration of the analogue input as digital inputs with the same meaning (o 1= remote ON/OFF, o 2= Remote chiller / heat pump, …..).

9.3 DIGITAL INPUT CONFIGURATION ID1 – ID18

Parameters involved:
CF24 = Configuration ID1…**CF34 =** Configuration ID18

0. Not enabled
1. Remote ON / OFF
2. Remote chiller / heat pump

3. Flow switch evaporator pump / supply fan overload
4. Flow switch condenser pump
5. Antifreeze heater circuit 1
6. Antifreeze heater circuit 2
7. High pressure switch circuit 1
8. High pressure switch circuit 2
9. Low pressure switch circuit 1
10. Low pressure switch circuit 2
11. Compressor 1 high pressure
12. Compressor 2 high pressure
13. Compressor 1 overload
14. Compressor 2 overload
15. Condenser fan overload of circuit 1
16. Condenser fan overload of circuit 2
17. Condenser fan overload of circuit 1 and 2 (common condenser)
18. Evaporator water pump overload
19. Support evaporator water pump overload
20. Condenser water pump overload
21. Support condenser water pump overload
22. End defrost of circuit 1
23. End defrost of circuit 2
24. Energy Saving
25. Pressure switch / compressor 1 oil
26. Pressure switch / compressor 2 oil
27. Pump down pressure switch of circuit 1
28. Pump down pressure switch of circuit 2
29. Generic alarm n°1
30. Generic alarm n°2
31. RTC disabled
32. Supplay fan enabled (the unit works only with the supplay fan)
33. Thermoregulation request (motocondensing unit)
34. Cooling request (motocondensing unit)
35. Heating request (motocondensing unit)
36. Request step 2 (motocondensing unit)
37. Request step 3 (motocondensing unit)
38. Request step 4 (motocondensing unit)

9.4 DIGITAL OUTPUT (RELAY) CONFIGURATION RL1- RL8

Parameter involved:

CF35= Configuration RL1…**CF42=** Configuration RL8

0. Not enabled
1. Alarm
2. Evaporator water pump / Supply fan
3. Evaporator support water pump
4. Anti-freeze heater / integration heating / boiler circuit 1
5. Anti-freeze heater / integration heating / boiler circuit 2
6. Condenser water pump
7. Condenser support water pump
8. 4-way valve for chiller / heat pump inversion of the circuit 1
9. 4-way valve for chiller / heat pump inversion of the circuit 2
10. 1° condenser fan step ON/OFF control of the circuit 1
11. 2° condenser fan step ON/OFF control of the circuit 1
12. 3° condenser fan step ON/OFF control of the circuit 1
13. 1° condenser fan step ON/OFF control of the circuit 2
14. 2° condenser fan step ON/OFF control of the circuit 2
15. 3° condenser fan step ON/OFF control of the circuit 2
16. Solenoid valve of the pump-down circuit 1
17. Solenoid valve of the pump-down circuit 2
18. Auxiliary output circuit 1
19. Auxiliary output circuit 2
20. Solenoid valve Intermittent for screw compressor 1
21. Solenoid valve of the liquid injection for compressor 1
22. Soleniod valve water side for chiller and heat pump circuit 1
23. Soleniod valve water side for heat pump circuit 1
24. Soleniod valve water side for chiller and heat pump circuit 2
25. Soleniod valve water side for heat pump circuit 2
26. Valve for geothermal function
27. Direct start-up : compressor 1 relay
    Part Winding 1 of the compressor 1
28. Part Winding 2 of the compressor 1
29. Capacity step valve 1 compressor 1
30. Capacity step valve 2 compressor 1
31. Capacity step valve 3 compressor 1
32. By-pass gas valve compressor 1start
33. Direct start: compressor 2 start

Part Winding 1 of the compressor 2
34. Part Winding 2 of the compressor 2
35. Capacity step valve 1 compressor 2
36. By-pass gas valve compressor 2 start

9.5 ANALOG OUTPUT CONFIGURATION 0 ÷ 10 VOLT (OUT1 E OUT2)

Parametri:
CF43 = Analog output OUT1 configuration
CF44 = Analog output OUT2 configuration

0 = output disabled
1 = 0..10V output for compressor 1 inverter controlled
2 = 0..10V output for compressor 2 inverter controlled
3 = 0..10V output for auxiliary output 1
4 = 0..10V output for auxiliary output 2
5 = 0..10V output for geothermal function
6 = 0..10V output for condenser fan circuit 1
7 = 0..10V output for condenser fan circuit 2
8 = 0..10V output for modulating evaporator pump
9 = 0..10V output for modulating condenser pump
o1..c26 = ON / OFF output for external relay management (same meaning of relays configuration)

9.6 CONFIGURAZIONE N° 2 USCITE ANALOGICHE 0 ÷ 10 VOLT / TAGLIO DI FASE (OUT3 E OUT4)

Parametri:
CF45 = Configurazione uscita analogica n° 3
CF46 = Configurazione uscita analogica n° 4

0 = output disabled
1 = 0..10V output for compressor 1 inverter controlled
2 = 0..10V output for compressor 2 inverter controlled
3 = 0..10V output for auxiliary output 1
4 = 0..10V output for auxiliary output 2
5 = 0..10V output for geothermal function
6 = 0..10V output for condenser fan circuit 1
7 = 0..10V output for condenser fan circuit 2
8 = PWM output for condenser fan circuit 1
9 = PWM output for condenser fan circuit 2
o1..c26 = OFF output for external relay management (same meaning of relays configuration)

10 PROGRAMMING WITH THE "HOT KEY 64"

10.1 DOWNLOAD: HOW TO PROGRAM AN INSTRUMENT WITH A PROGRAMMED "HOT KEY"

1. Turn off the instrument supply
2. Insert the hot key.
3. Turn on the power supply.
4. Immediately the parameters are downloaded.

During the download the regulation is locked and the top display shows the "**doL**" blinking label. At the end of the download will appear:
"End" if the programming procedure is completely OK, after 30seconds the regulation starts automatically.
"Err" if the programming procedure has found an error and the parameter have not been transferred. In this case turn off and then on the instrument supply to repeat the operation or remove the hot key, with power supply off, to restart the regulation.

10.2 UPLOAD: HOW TO PROGRAM A "HOT KEY" WITH THE PARAMETERS OF THE INSTRUMENT

1. Turn on the power supply.
2. Insert the hot key.
3. Enter the function Menu.
4. Select the **UPL** function (on the bottom display).
5. Push **SET** key and immediately the instrument starts transfer the parameters into the Hot key.

During the upload the regulation is locked and the top display shows the "**UPL**" blinking label. At the end of the UPLOAD will appear:
"End" if the programming procedure is completely OK, after 30seconds the regulation starts automatically.
"Err" if the programming procedure has found an error and the parameter have not been transferred. Repeat the procedure.
To exit the UPL function push the MENU key or wait the time-out.

11 PROGRAMMING USING THE KEYBOARD

Through the instrument keyboard it is possible to enter the programming. In all the three accessible levels the user can show and modify both value and visibility of the parameters. To ensure an easy navigation through the different levels the common parameters have been named and grouped under a family name.
The three levels of programming:

- Pr1 User level
- Pr2 Maintenance level
- Pr3 OEM level

11.1 PASSWORD DEFAULT VALUES

- Password level Pr1 = **1**
- Password level Pr2 = **2**
- Password level Pr3 = **3**

Each password can be changed, the range is from 0 to 999.

11.2 ENTER THE PR1 - PR2 - PR3 PROGRAMMING LEVELS

Pr1 LEVEL:
Push **SET** + **DOWN** together for 3 seconds, the top display shows the PAS label and the bottom display shows the Pr1 label. The leds Cir1 and Cir2 are blinking to inform that you now are in PR1 programming level.
Pr2 LEVEL:
Starting from Pr1 level push the UP key for 2 seconds and the bottom display will show Pr2. The top display still shows PAS.
Push the SET key and the top display will show the 0 blinking value; set the password level using the UP and DOWN keys then confirm with SET key.
Pr3 LEVEL:
Starting from the Pr2 level push the UP key for 2 seconds and the bottom display will show Pr3. The top display still shows PAS.
After selecting the level push the SET key and the top display will show the 0 blinking value where to insert the password.
Set the password level using the UP and DOWN keys then confirm with SET key.
Dependening on the password value there will be the different level access, if the password is wrong the instrument shows the password value again.

ATTENTION:
For all the programming levels Pr1, 2, 3: the CF family (or configuration parameters) can not be changed if the unit is running in chiller or heat pump. To change this parameters is necessary to set the unit in stand-by and then enter the programming again.
During the defrost the dF family can't be programmed.

11.3 HOW TO CHANGE A PARAMETER VALUE

Enter the programming

1. Push the **SET** + **DOWN** keys together for 3 seconds;
2. Select the parameter label with up and down keys;
3. Push **SET** to enter the parameter value;

4. Change the value with **UP** or **DOWN** keys;
5. Push "**SET**" to confirm, after some seconds the display shows the next parameter;
6. Exit: Push **SET + UP** together when a parameter label is displayed or wait 15seconds without pushing a key.

NOTE: a new parameter value is confirmed also after the 15 seconds of timeout is expired (without pushing SET key to confirm).

11.4 CHANGE THE PASSWORD VALUE

Pr1 LEVEL

Remember that it is necessary to know the old password value.

1) Enter the Pr1 level
2) Select a parameter family.
3) Select "**Pr1**" on the bottom display; the current password value is on the top display. Push the SET key to change the value that now is blinking.
4) Use the UP or DOWN key to insert the NEW PASSWORD value, then push SET to confirm the new value.
5) The top display blinks for some seconds and then shows the next parameter.
6) Exit the programming pushing SET + UP together or wait the timeout.

Pr2 LEVEL

Remember that it is necessary to know the old password value.

1. Enter the Pr2 level
2. Select a parameter family.
3. Select the "**Pr2**" on the bottom display; the current password value on the top display. Push the SET key to change the value that now is blinking.
4. Use the UP or DOWN key to insert the NEW PASSWORD value, then push SET to confirm the new value.
5. The top display blinks for some seconds and then shows the next parameter
6. Exit the programming pushing SET + UP together or wait the timeout.

Inside the Pr2 level it is possible to change also the Pr1 password.

Pr3 LEVEL

Remember that it is necessary to know the old password value.

1. Enter the Pr3 level
2. Select a parameter family.
3. Select the "**Pr3**" on the bottom display; the current password value on the top display. Push the SET key to change the value that now is blinking.
4. Use the UP or DOWN key to insert the NEW PASSWORD value, then push SET to confirm the new value.
5. The top display blinks for some seconds and then shows the next parameter
6. Exit the programming pushing SET + UP together or wait the timeout.

Inside the Pr3 level it is possible to change also the Pr1 and Pr2 passwords.

11.5 ENTER THE PROGRAMMING LEVEL PR1

Enter the Pr1 "User level ":

1. Push the **SET** + **DOWN** keys together for 3 seconds. The top display shows PAS while the bottom display shows Pr1 labels.
2. Push **SET** key and the top display shows a blinking 0, with **UP** or **DOWN** insert the Pr1 password. Push **SET** and, if the value is correct, the top display will show the first family of parameters **"ALL"**. Otherwise set the password again.
3. Select a parameter family with **DOWN** or **UP** keys.
4. Push **SET** to enter, the bottom display shows the first available parameter label while the top display shows its value.

The user can shows and modify all the parameters belonging to this family.

Parameter status, leds and bottom display in Pr1

- If the selected parameter can not be changed the leds 1 and 2 are blinking.
- In Pr1 level the user can not see and change any parameter of Pr2 and Pr3.
- The MENU key allows to exit from a family to reselect another without exit the Pr1 level.
- To exit completely the programming push SET + UP.

11.6 ENTER THE PROGRAMMING LEVEL PR2

Enter the Pr2 "maintenance level ":

1. Push the **SET** + **DOWN** keys together for 3 seconds. The top display shows PAS while the bottom display shows Pr1 labels.
2. Push UP key for 2 seconds and the top display will show Pr2.

3. Push **SET** key and the top display shows a blinking 0, with **UP** or **DOWN** insert the Pr2 password. Push **SET** and, if the value is correct, top display will show the first family of parameters "**ALL**". Otherwise set the password again.
4. Select a parameter family with **DOWN** or **UP** keys.
5. Push **SET** to enter, the bottom display shows the first available parameter label while the top display shows its value.

The user can shows and modify all the paramters belonging to this family.

Parameter status, leds and bottom display in Pr2

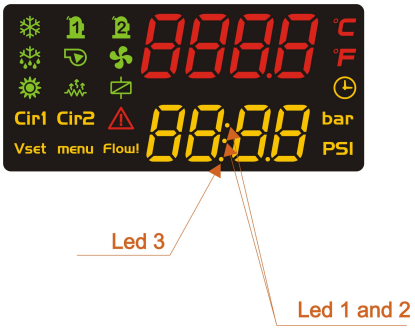

- Leds 1 / 2 are blinking: the parameter can not be changed.
- All the leds are off: the parameter ca not be seen in Pr1 level.
- Led 3 is on: the parameter can be seen in Pr1 level.
- Led 3 blinking: the parameter can be showed and changed in Pr2, showed but not changed in Pr1.
- Leds 1 / 2 / 3 are blinking: the parameter can't be showed and changed in Pr2 and in Pr1.
- In Pr2 level the user can not see and change any parameter of Pr3 level.
- The MENU key allows to exit from a family to reselect another without exit the Pr2 level.
- The MENU key allows to pass to Pr1 starting from a family label.
- To exit completely the programming push SET + UP.

11.7 Enter the programming level Pr3

Enter the Pr3 "OEM level ":

1. Push the **SET** + **DOWN** keys together for 3 seconds. The top display shows PAS while the bottom display shows Pr1 labels.
2. Push UP key for 2 seconds and the top display will show Pr2.
1. Push UP key again for 2 seconds and the top display will show Pr3
3. Push **SET** key and the top display shows a blinking 0, with **UP** or **DOWN** insert the Pr3 password. Push **SET** and, if the value is correct, top display will show the first family of parameters "**ALL**". Otherwise set the password again.
4. Select a parameter family with **DOWN** or **UP** keys.
5. Push **SET** to enter, the bottom display shows the first available parameter label while the top display shows its value.

The user can shows and modify all the paramters belonging to this family.

Parameter status, leds and bottom display in Pr3

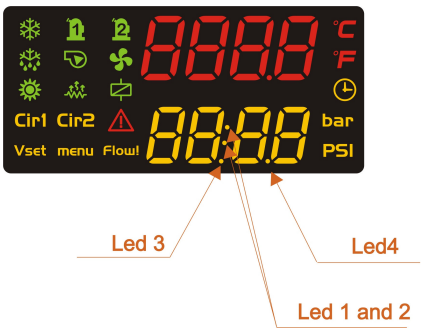

- Leds 1 / 2 are blinking: the parameter can not be changed in Pr1 and Pr2 level.
- All the leds are off: the parameter is available only in Pr3.
- Led 4 on: the parameter can be changed also in Pr2.
- Led 4 blinking: the parameter is visible but not modifiable in Pr2.
- Leds 3 / 4 on: the parameter is visible and modifiable in Pr2 and in Pr1.
- Leds 3 / 4 blinking: the parameter is visible but not modifiable in Pr1 and in Pr2.
- The MENU key allows to exit from a family to reselect another without exit the Pr2 level.
- The MENU key allows to pass to Pr1 starting from a family label.
- To exit completely the programming push SET + UP.

11.8 Move a parameter level from Pr2 to Pr1

Enter Pr2 programming level

Select the parameter and if the led n° 3 is off: the parameter is available only in Pr2.

<u>To show the parameter also in Pr1:</u>

1. Keep pushed SET key;

2. Push 1 time the DOWN key and the led 3 should be on, the parameter is now available in Pr1.
   To hide the parameter in Pr1:
1. Keep pushed SET key;
2. Push 1 time the DOWN key and the led 3 should be off, the parameter is now removed from Pr1.

11.9 MOVE A PARAMETER FROM PR3 TO PR2 TO PR1

Enter Pr3 programming level, here the parameter are all visible:
Select the parameter, if all the leds are off the parameter is available only in Pr3.
   To show the parameter also in Pr2 and Pr1:
1. Keep pushed SET key;
2. Push 1 time the DOWN key and the leds 3 and 4 should be on, the parameter is now available also in Pr2 / Pr1.
   To show the parameter only in Pr2:
1. Keep pushed SET key;
2. Push 1 time the DOWN key and the led 3 is off and the led 4 is on, the parameter is now available also in Pr2.
   To show the parameter only in Pr3:
1. Keep pushed SET key
2. Push 1 time the DOWN key and the leds 3 and 4 are off, the parameter is now available only in Pr3.

11.10 VISIBILITY AND PARAMETER VALUE LOCKED

To set the only visibility and lock the parameter value it is necessary enter Pr3 programming level.
Pr1 PARAMETER VISIBILITY
Enter the Pr3 level
1. Select the parameter;
2. Keep pushed the SET key;
3. Push 1 time the MENU key and the led 3 change from on to blinking: the parameter is visible in Pr1 but can't be changed.

Pr2 PARAMETER VISIBILITY
Enter the Pr3 level
1. Select the parameter;
2. Keep pushed the SET key;
3. Push 1 time the MENU key and the led 4 change from on to blinking the parameter is visible in Pr2 but can't be changed.

Leds 3 / 4 blinking: the parameter is visible in Pr1 and in Pr2 but in those levels now they can't be changed.

TO SET THE ORIGINAL TAG FOR THE PARAMETER Pr1 / Pr2
1. Keep pushed the **SET** key;
2. Push one time the **MENU** key, the leds 3 / 4 turn on, the parameter can be seen and modified in Pr1 and Pr2.

11.11 PROGRAMMING: DIGITAL INPUT AND OUTPUT POLARITY

The parameters that allow to configure different options such as:
1. Digital inputs
2. Digital outputs (relay)
3. Proportional output configured as ON/OFF
4. Analogue input configured as digital input

have a different parameter description that allows to configure the operating mode and the corresponding polarity.

Example of programming:
The bottom display shows the parameter label (CF24) Digital input ID1 configuration;
Note that the top display shows "**c**" or "**o**" before the configuration number.

The selection **7** for the digital input ID1 (CF24) means that it is the "high pressure switch of circuit 1".
The label "**o**" means that the digital input is active for **open** contact.

Otherwise if the selection is **7** for the digital input ID1 (CF36) = "high pressure switch of circuit 1".
The label "**c**" means that the digital input is active for **closed** contact.

11.12 CHANGE THE POLARITY OF THE DIGITAL INPUTS-OUTPUTS

Enter the programming:

1. Select a parameter with digital input/output value, the top display shows the label **o** before the configuration number while the bottom display shows the parameter label.
2. Push **SET** key: the **o** label and the configuration number are blinking, use the **UP** or **DOWN** key and select the proper polarity **(o** / **c)** of the function, then push **SET** key to confirm it all.
3. The top display blinks for some seconds and then it will shows the next parameter.
4. To exit the programming push **SET + UP** together or wait the timeout (15seconds).

12 FUNCTION MENU " M" KEY

The function Menu is composed of the following items:

1) Show and reset the alarms **ALrM**
2) Compressor overload alarm reset **COtr**
3) Show and reset the alarm log **ALOG**
4) Upload the parameter into the Hot Key **UPL**
5) Enable – disable one or the two circuits **CrEn**
6) Enable – disable one of the compressors **COEn**
7) Enable – disable one of the pumps **POEn**
8) Display the compressor discharge temperature **COdt**
9) Show and reset the number of compressor running hour **Hour**
10) Show and reset the number of compressor starts-up **COSn**
11) Show the condensing fan speed percentage of the proportional output **Cond**
12) Show the percentage of the proportional output 0 ÷ 10 Vdc **Pout**
13) Time counting to next defrost cycle, under heat pump mode, **dF**
14) Show the probe temperatures that enabled to control the auxiliary output **uS**
15) Show the probe the temperature of the remote panels **trEM**

MENU FUNCTION ACCESS: Push and release the **M** key.
MENU FUNCTION ACCESS: Push and release the **M** key or wait the 15seconds timeout limit.
With the **UP** or **DOWN** keys move inside the label list.

12.1 ALARM LIST: SHOW AND RESET

ALrM FUNCTION

Enter the function MENU pushing M key one time

1) Use the **UP** or **DOWN** to select the AlrM label
2) Push **SET** key (Nothing happens if there are no active alarm events)
3) Bottom display: alarm label code. Top display: label **rSt** to reset or **NO** if it is not possible.
4) Use the **UP** or **DOWN** to scroll the alarm list.
5) Pushing SET when the rSt label is displayed the corresponding alarm will be reset, then the display shows next alarm in the list, pushing SET again the alarm is reset and the display shows next alarm etc. Nothing happens by pushing SET when the label NO is displayed, in this case push UP or DOWN to move to another alarm label.
6) To exit the ALrM reset function push MENU one time or wait the timeout.

12.2 COMPRESSOR OVERLOAD ALARM RESET

COtr function resets the compressor overload alarm event.
Within the COtr function all the active compressor overload alarms are displayed in a list.
Labels involved in COtr: **CO1r = compressor 1 overload reset … CO2r = compressor 2 overload reset.** Labels CO1r – CO2r are available if the digital inputs have been previously configured.

ATTENTION

The **COtr** menù is displayed only if the compressor overload alarm is at manual reset (after AL25 alarm events per hour the alarm is at manual reset).

MANUAL ALARM RESET PROCEDURE

Enter Menu function

1. Use **UP** or **DOWN** key and select the COtr on the bottom display.
2. Push **SET** one time, if there are active alarms the bottom display shows the alarm label eg. CO1r (for compressor 1) while the top display shows the label rSt to reset the alarm or NO if the alarm can not be reset. Use the UP or DOWN keys to scroll all the alrm list.
3. Nothing happens by pushing SET when the label NO is displayed.
4. Pushing SET when the rSt label is displayed the corresponding alarm will be reset after the password: bottom display = ArSt while the top display = PAS.
5. Push SET and the top display blinks 0 while the bottom shows PAS. Insert the password using UP or DOWN key (see AL60 parameter). If the password is OK the ArSt blinks for per 3seconds, if the password value is not correct the top display blinks 0 while the bottom shows PAS. If within 5 seconds no value is inserted the display label come back to CO1r function.
6. To exit the COtr function push MENU or wait the timeout.

12.3 COMPRESSOR OVERLOAD PASSWORD.

The default value is **0;** to change this value enter Pr3 level, search AL60 parameter and modify its value.

12.4 ALARM LOG LIST

ALOG FUNCTION TO SEE THE ALARM LOG
The function and the alarm codes are visible only if there are alarm events. If many events are active at the same time the list displayed by increasing order.
Enter the function Menu
1. Select ALOG
2. Push **SET** one time. Nothing happens if there are no active alarm events.
3. The bottom display shows the alarm label, the top display shows a number in the range 00 to 99.
4. Use the UP or DOWN keys to scroll the list.
5. To exit the ALOG function push MENU or wait the timeout.

12.5 ERASE THE ALARM LOG LIST

ALOG FUNCTION TO ERASE THE LOG LIST
1. Enter the function Menu.
2. Use the **UP** or **DOWN** keys to select ALOG on the bottom display.
3. Push the **SET** key.
4. Push **UP** or **DOWN** keys and search the **ArSt** label on the bottom display; the top display shows PAS.
5. Push **SET**: the bottom display shows **PAS** and the top display shows 0 value blinking.
6. Insert the password
7. If the password is OK the label **ArST** blinks for 5 seconds then the display returns to normal condition read-out (probes).
8. If the password is not correct the display shows **PAS** again. in any case is possible to scroll the list with **UP** or **DOWN**
9. To exit push the M key one time or wait the timeout.

12.6 PASSWORD VALUE OF THE ALARM LIST

The default value is **0** to change this value enter Pr3 level under the AL parameter family.

THE ALARM LIST CONTAINS 100 EVENTS IN A FIFO STRUCTURE. WHEN THE MEMORY IS FULL ANY NEW ALARM WILL ERASE THE OLDEST.

12.7 DISABLE – ENABLE A SINGLE CIRCUIT

Through the instruments keyboard is possible to completely disable a single circuit for maintenance or to use just a cooling part of of the unit.

CrEn FUNCTION enables – disables a circuit from keyboard.
Label involved with CrEn function: **Cr1E = circuit 1, Cr2E = circuit 2**
HOW TO DISABLE A CIRCUIT
Enter the function Menu
1. Use **UP** or **DOWN** keys to select CrEn on the bottom display
2. Push **SET** key: the bottom display = **Cr1E**, top display = **En**.
3. Select the circuit 1 or 2 with UP or DOWN key (Cr1E or Cr2E).
4. Push **SET** key for 3 seconds when; the top display shows the **En** blinking label. Using UP or DOWN key, choose the label **diS** (Disabled) or En (Enabled), then push SET key to confirm the new selection. The display shows next circuit status.
5. To exit the CrEn function push MENU key or wait the timeout.

12.8 READ-OUT OF A CIRCUIT NOT ENABLED

If one circuit is disabled the bottom display shows **diS** alternated with the label name of the measurement selected.
Circuit 1 = diS the bottom display shows **b1dS** = circuit 1 disabled.
Circuit 2 = diS the bottom display shows **b2dS** = circuit 2 disabled.
The **b2dS** label appears only if the 2nd circuit is configured,

12.9 ENABLE OR DISABLE A SINGLE COMPRESSOR

Through the instruments keyboard is possible to disable a single compressor for maintenance or to lock it when malfunctioning.
COEn FUNCTION compressors running status.
Label involved in COEn function: **CO1E = Compressor 1 status… CO6E = Compressor 6 status**
The COEn function uses only the compressors configured by the corresponding output parameters.
Enter the function Menu
1. Use the **UP** or **DOWN** keys to select COEn.
2. Push SET key; the bottom display shows CO1E, and the top display shows En
3. Select the compressor using UP or DOWN key
4. Push SET for 3 seconds; the top display shows the En label blinking. Using UP or DOWN key change the label diS (Compressor disabled) or En (compressor enabled) then push SET to confirm.
5. To exit the COEn function push MENU key or wait the timeout.

12.10 READ-OUT OF A COMPRESSOR NOT ENABLED

During the normal running condition a disabled compressor is displayed with a blinking label alternated with the measurement value of the display.
If the compressor is disabled these the corresponding labels: C1dS = compressor 1 disabled, C2dS = compressor 2 disabled
The label C1dS…C2dS are available only if the corresponding compressor is configured.

12.11 READ-OUT OF THE COMPRESSOR DISCHARGE TEMPERATURE PROBE

The menu function allows to read-out the compressor temperature probes.
COdt FUNCTION shows the discharge temperatures
Label involved in **Codt** function: **CO1t** Compressor 1 discharge temperature (only for compressor 1 is possible to configure the discharge probe)

1. Use the **UP** or **DOWN** keys to select **COdt**
2. Push SET key: bottom display = **CO1t**, top display = temperature value of that probe.
3. To exit the COEn function push MENU key or wait the timeout

ATTENZIONE
The labels **Codt** are available only if the compressor probe is configured.
The display resolution is 0.1°C until the read-out is 99.9, over 100°C it is 1°C.

12.12 READ-OUT OF THE RUNNING HOURS

This menu allows to shows all the time running hours of the compressors, supply fan and pumps.
Hour FUNCTION to show the controlled load consumption
Label involved in the Hour function:
CO1H Compressor 1 running hours .. CO2H Compressor 2 running hours.
EP1H Evaporator water pump or Supply fan running hours (air/air)
EP2H Support evaporator water pump running hours
CP1H Condenser water pump running hours
CP2H Support condenser water pump running hours
The labels are displayed only if the corresponding output is present and configured.
The running hours is displayed on the top display, the resolution is x 10 hours (eg 2 means 20 hours, 20 means 200hours)

Enter the function Menu

1. Use the UP or DOWN keys to select Hour
2. Push SET key: bottom display = above labels, top display = hours x10. The time is on.
3. Use the UP or DOWN keys to scroll the list.
4. To exit the Hour function push MENU key or wait the timeout

12.13 RESET THE RUNNING HOUR

Enter the function Menu

1. Within the Hour function select, with UP or DOWN, the interested label: CO1H, CO2H, EP1H, EP2H, CP1H, CP2H.
2. Push the **SET** keys for 3seconds: the top display shows the running hours blinking value, then it shows 0 to confirm the reset. The next load label is automatically loaded.

To exit the Hour function push MENU key or wait the timeout

12.14 READ-OUT OF THE COMPRESSOR STARTS-UP

For each compressor is possible to show the number of starts-up.
COSn FUNCTION: number of starts-up of the compressor
Label involved in COSn function: **C1S** number of compressor 1 starts-up .. **C2S** number of compressor 2 starts-up
The labels are displayed only if the corresponding output is present and configured
The number of starts-up is displayed on the top display, the resolution is x 10 (eg 2 means 20 starts, 20 means 200starts)

Enter the function Menu

1. Use the UP or DOWN keys to select **COSn**.
2. Push **SET** one time: the label of the first load C1S is showed on the top display, the bottom display shows the number x10.
3. With UP or DOWN scroll the compressor list.
4. To exit the Hour function push MENU key or wait the timeout

12.15 RESET THE STARTS-UP NUMBER

Enter the function Menu

1. Use the UP or DOWN keys to select **COSn**.
2. Push **SET** one time: the label of the first load C1S is showed on the top display, the bottom display shows the number x10.
3. With UP or DOWN scroll the compressor list and select one of them
4. Push the **SET** keys for 3seconds: the top display shows the running hours blinking value, then it shows 0 to confirm the reset. The next load label is automatically loaded.
5. To exit the Hour function push MENU key or wait the timeout.

12.16 READ-OUT OF THE PROPORTIONAL OUTPUT PERCENTAGE OF THE CONDENSER FAN CONTROL

The proportional outputs of the two circuits, that control the fan speed, can be showed in the menu function.

Cond FUNCTION selects the proportional output 1 and 2.
Label involved in Cond function.
Cnd1 Proportional output status of the condenser fan of the circuit 1.
Cnd2 Proportional output status of the condenser fan of the circuit 2.

TO SEE THE OUTPUT PERCENTAGE:
Enter the function menu

1. Use the UP or DOWN keys to select **Cond**.
2. Push **SET** key: the bottom display shows Cnd1, the top display shows the output percentage.
3. Use the UP or DOWN keys to select Cnd1 or Cnd2, the top display always shows the value, between 0% and 100%, of the proportional output of the selected circuit.
4. To exit the Hour function push MENU key or wait the timeout.

12.17 READ-OUT OF THE FOUR PROPORTIONAL OUTPUT

The four proportional outputs 0-10V, can be showed in the menu function.
Pout FUNCTION selects the proportional outputs.
Label involved in Cond function:
Pou1 Proportional output or signal to drive the external relay 1
Pou2 Proportional output or signal to drive the external relay 2
Pou3 Proportional output or signal to drive the external relay 3
Pou4 Proportional output or signal r to drive the external relay 4
The labels are displayed only if the corresponding output is present and configured.
TO SEE THE FOUR OUTPUT PERCENTAGE:
Enter the function menu

1. Use the UP or DOWN keys to select **Pout**.
2. Push **SET** key: the bottom display shows Pou1, the top display shows the output percentage.
3. Use the UP or DOWN keys to select Pou1, Pou2, Pou3 or Pou4 the top display always shows the value, between 0% and 100%, of the proportional output of the selected circuit.
4. To exit the Hour function push MENU key or wait the timeout.

ATTENTION:
If the proportional output Pou1 - Pou2 - Pou3 - Pou4 are configured to drive an external relay the display will show 0=relay off and 100=relay on.

12.18 READ-OUT OF THE TIME COUNTING TO THE NEXT DEFROST

The time delay between two defrosts can be showed in the menu function.
dF FUNCTION time to next defrost.
Label involved in dF function:
dF1 delay time to next defrost of the circuit 1
dF2 delay time to next defrost of the circuit 2
The labels apperas on if the heat pump configuration is enabled.

Enter the function menu :

1. Use the UP or DOWN keys to select **dF**
2. Push **SET** key: the dF1 label is showed on the top display, the bottom display shows the time delay to next defrost in minutes / seconds. The icon is on.
3. Use the UP or DOWN keys to select dF1 or dF2.
4. To exit push MENU key or wait the timeout.

12.19 READ-OUT OF THE PROBES CONFIGURED TO CONTROL AN AUXILIARY OUTPUT RELAY

uS FUNCTION temperature/pressure value of the control probe for auxiliary output.
Label involved in **uS** function**:**
uSt1 auxiliary probe value of the circuit 1
uSt2 auxiliary probe value of the circuit 2
Enter the function menu

1. Use the UP or DOWN keys to select uS.
2. Push **SET** key: the label **uSt1** (temperature probe) or **uSP1** (Pressure probe) is showed on bottom display, the top display shows the the temperature or pressure value.
3. Use the UP or DOWN keys to select **uSt1** auxiliary probe for circuit 1or **uSt2** auxiliary probe for circuit 2.
4. To exit the Hour function push MENU key or wait the timeout.

12.20 HOW TO DISPLAY THE TEMPERATURE OF THE REMOTE KEYBOARD 1 OR 2

Inside the funcion menu it is possible to see the ambient temperature detected by the NTC sensor mounted in the remote keyboard (availabel only for model with internal probe)
FUNCTION trEM to show the temperature of the remote panels
Identification label **trEM.**
trE1 value of the NTC probe of the remote 1
trE2 value of the NTC probe of the remote 2

Select with **UP** or **DOWN** the **trEM** function
Push **SET** the trE1 or trE2 label is shown on the bottom display, the top display shows the probe value.
Use the UP or DOWN arrow to change beteween **trE1** or **trE2** read-out.
To exit to the normal display read-out push MENU or wait the time – out time.

ATTENTION:

THE trEm function and the labels trE1 or trE2 appear only if the CF47=1 (remote panel 1 configuration) or if the parameter CF48 = 1 (remote panel 2 configuration).

13 CHILLER / HEAT PUMP SELECTION

The CF52 parameter allows to select and enable the running mode:
Par. CF52= 0: Through keyboard; the user can start and stop the unit using the keys of the front panel.

Par. CF52 = 1: Through digital input programmed as start/stop the unit from remote control.

- this selection is enabled if there is one digital input configured as start/stop from remote (remote chiller / heat pump). If any of the digital input is not configured as "remote chiller/heat pump", the unit remains in **stand–by**.
- if a digital input is configured as "o2" ("remote chiller/heat pump" active if the contact is open) when the digital input is open the unit works in chiller mode, when the digital input is closed the unit works in heat pump mode
- if a digital input is configured as "c2" ("remote chiller/heat pump" active if the contact is closed) when the digital input is open the unit works in heat pump mode, when the digital input is closed the unit works in chiller mode
- the working mode selection (chiller / heat pump) from keyboard is disabled; it is possible to switch-off the unit (std-by mode) or switch-on the unit in the working mode selected by digital input

Par. CF52 =2: Automatic selection of the Chiller - Heat Pump through analogue input
The analogue input selection or change over function overrides the selection of the working mode (chiller / heat pump) by digital input. If the external air temperature are within the ST13 differential, the user can change the running mode from the keyboard.
If the unit is running with CF52 = 1 or CF52=2, and it is requested a running mode change, the controller turns off all the outputs, starts a fixed delay time signalled by the chiller or heat pump blinking led. This blinking led indicates which running mode will be activated after the compressor delay time protection.

To change the running status the following condition must be respected otherwise the unit remains in **stand - by:**
1. CF02=3 (chiller and heat pump unit)
2. CF52=2 and a NTC probe configured as NTC external air temperature for dynamic setpoint/ boiler / change over
3. This probe is working properly.

Parameters involved with the change over function:
ST12 Change over Setpoint. If the analogue input control (from probe) function is enabled, it represents the limit temperature of the probe value under which the unit runs the Heat Pump mode.
ST13 Change over Differential. If the analogue input control (from probe) function is enabled, it represents the limit differential temperature of the probe value to restart in the Chiller mode.
For external air temperature within ST13 the user can manually change the status from keyboard.

GRAPH: AUTOMATIC CHANGE OVER

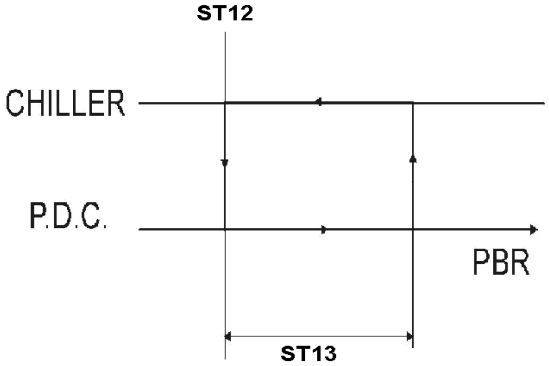

Operation mode selection by keyboard:

CF51 = 0: pushing ❄ key the unit starts in chiller, pushing ☀ key the unit starts in heat pump

CF51 = 1: pushing ❄ key the unit starts in heat pump, pushing ☀ key the unit starts in chiller

Operation mode selection by probe:

CF51 = 0 External air temperature probe > ST12+ ST13 ❄ the unit starts in chiller, External air temperature probe < ST12 ☀ the unit starts in heat pump.

CF51 = 1 External air temperature probe > St12+ ST13 the unit starts in chiller, External air temperature probe < ST12 the unit starts in heat pump.

14 UNIT START - STOP

The unit start sotp can be done from one of the following operations:

- From keyboards
- RTC Time table
- Digital input configured as remote ON/OFF

14.1 START – STOP AND STAND- BY FROM KEYBOARD

TURN THE UNIT ON IN CHILLER OR HEAT PUMP MODE FROM THE KEYBOARD

Push and release the key allows to start in chiller mode if CF51=0, in heat pump if CF51=1. When the unit is running the corresponding icon on the display is on.
INPORTANT: to change from chiller to heat pump and viceversa the unit must be set in stand-by before continuing.

Push and release the key allows to start in heat pump mode if CF51=0, in chiller if CF51=1. When the unit is running the corresponding icon on the display is on.
INPORTANT: To change from chiller to heat pump and viceversa the unit must be set in stand-by before continuing.

STAND- BY (OR UNIT OFF, NOT RUNNING)

The unit is considered in stand by when the leds and are both off. The stand-by is reached each time the Chiller or the Heat Pump are turned off. During the stand by the user can:

- Show all the probe measurements
- Detect and reset the alarm events.

14.2 UNIT START- STOP FROM DIGITAL INPUT

Turn on or off the unit from digital input

Set the digital input as remote ON/OFF, depending on the input polarity it can generate the unit off

- The digital input overrides the keyboard command.
- The keyboard can run only if the digital input is not active.
- When the digital input is not active the instrument restore its status (had before the digital input activation).

14.3 MOTOCONDENSING UNIT START- STOP FROM DIGITAL INPUT

14.4 MODE WITH DIGITAL INPUT CONFIGURED AS THERMOREGULATION REQUEST

Unit configured as motocondensing CF03 = 1
Digital input thermoregulation request (motocondensing)

- With contact OFF unit on stand-by , the top display shows **OFF**
- With contact ON unit on stand-by , the top display shows **On**

With active contact select the chiller mode from the keyboard (the top display shows **OnC**) or heat pump (the top display shows **OnH)**, with the funcioning mode active the step is activated, the others, if availables, will be requested by configured digital input as resources on circuits.
With active contact if the unit is being switched off by keyboard it can be switched on by keyboard. If the unit is being switched off by keyboard, in order to switch on the unit from digital input it must be deactivated and activated.

14.5 MODE WITH DIGITAL INPUT CONFIGURED AS CHILLER REQUEST

Unit configured as motocondensing CF03 = 1
Digital input chiller request (motocondensing)

- With contact OFF unit on stand-by , the top display shows **OFF**
- With contact ON unit on stand-by , the top display shows **OnC**

With active contact unit on chiller mode is activated also a step, the others, if availables, will be requested by configured digital input as as resources on circuits.

With active contact if the unit is being switched off by keyboard it can be switched on by keyboard. If the unit is being switched off by keyboard, in order to switch on the unit from digital input it must be deactivated and activated.

14.6 MODE WITH DIGITAL INPUT CONFIGURATED AS HEAT PUMP REQUEST

Unit configured as motocondensing CF03 = 1
Digital input heat pump request (motocondensing)

- With contact OFF unit on stand-by , the top display shows **OFF**
- With contact ON unit on stand-by , the top display shows **OnH**

With active contact unit on chiller mode is activated also a step, the others, if availables, will be requested by configured digital input as as resources on circuits.
With active contact if the unit is being switched off by keyboard it can be switched on by keyboard. If the unit is being switched off by keyboard, in order to switch on the unit from digital input it must be deactivated and activated.

15 COMPRESSOR THERMOREGULATION

15.1 THERMOREGULATION PARAMETER DESCRIPTION

Par. **ST01** Chiller Setpoint
It allows to set the chiller working temperature within the range ST02..ST03.
Par. **ST02** Minimum setpoint limit in chiller.
The user can not program a setpoint value lower than ST02, the range is –50 °C..ST01.
Par. **ST03** Maximum setpoint limit in chiller.
The user can not program a setpoint value higher than ST02, the range is ST01..70°C.
Par. **ST04** Heat pump setpoint
It allows to set the Heat pump working temperature within the range ST05..ST06.
Par. **ST05** Minimum setpoint limit in heat pump.
The user can not program a setpoint value lower than ST05, the range is –50 °C..ST04.
Par. **ST06** Maximum setpoint limit in heat pump
The user can not program a setpoint value higher than ST06, the range is ST01..70°C.
Par. **ST07** Regulation band width in chiller mode.
The configured resources are distributed inside the regulation band.
Example Unit configured with 2 circuits, 1 compressors per circuit and thermoregulation controlled by the evaporator inlet NTC probe. Chiller setpoint: evaporator inlet water = 12°C, evaporator outlet water 7°C: when the evaporator inlet water is 12°C all the compressor outputs are on while when the evaporator inlet water is 7 °C all the compressors are OFF.
Thermoregulation parameters: Par. ST01 = 7 °C / Par. ST07 = 5 °C
Functioning: the regulation band ST07= 5 °C is divided by the number of resources 2 compressors therefore the step for each resource is 2.5°C, each2.5°C if the temperature is increasing or decreasing one of the resource is turned on or off.
Par. **ST08** Regulation band in heat pump mode
The configured resources are distributed inside the regulation band.
Example Unit configured with 2 circuits, 1 compressors per circuit and thermoregulation controlled by the evaporator outlet NTC probe. Chiller setpoint: evaporator inlet water = 40°C, evaporator outlet water 45°C: when the evaporator outlet water is 40°C all the compressor outputs are on while when the evaporator outlet water is 45 °C all the compressors are OFF.
Thermoregulation parameters: Par. ST04 = 40 °C / Par. ST08 = 5 °C
Functioning: the regulation band ST08=5 °C is divided by the number of resources 2 compressors therefore the step for each resource is 2.5°C, each 2.5°C if the temperature is increasing or decreasing one of the resource is turned on or off.
Par. **ST08** Regulation band in heat pump mode
The configured resources are distributed inside the regulation band.
Par. **ST09** Defines the thermoregulation probe in chiller.
0= NTC Temperature probe of the evaporator inlet
1= NTC Temperature probe of the evaporator circuit 1
2= NTC Temperature probe of the evaporator circuit 2
3= NTC Temperature probe of the common evaporator
4= Probe temperature of the remote keyboard 1
5= Probe temperature of the remote keyboard 2
The **ST10** parameter defines the thermoregulation probe of the unit with heat pump control
0= NTC probe temperature of the evaporator inlet
1= NTC probe temperature of the evaporator 1 outlet
2= NTC probe temperature of the evaporator 2 outlet
3= NTC probe temperature of the evaporator common outlet
4= Probe temperature of the remote keyboard 1
5= Probe temperature of the remote keyboard 2
6= NTC probe temperature of the condenser common inlet
7= NTC probe temperature of the condenser 1 inlet
8= NTC probe temperature of the condenser 2 inlet
9= NTC probe temperature of the condenser 1 outlet
10= NTC probe temperature of the condenser 2 outlet
11= NTC probe temperature of the condenser common outlet
ATTENTION

To have the same regulation both for chiller and heat pump set the parameters ST09 and ST10 with the same value

16 THERMOREGULATION: PROPORTIONAL OR NEUTRAL ZONE

Par. **ST11** determines the type of regulation
0= Proportional
1= Neutral zone

16.1 GRAPH OF THE COMPRESSOR THERMOREGULATION IN CHILLER

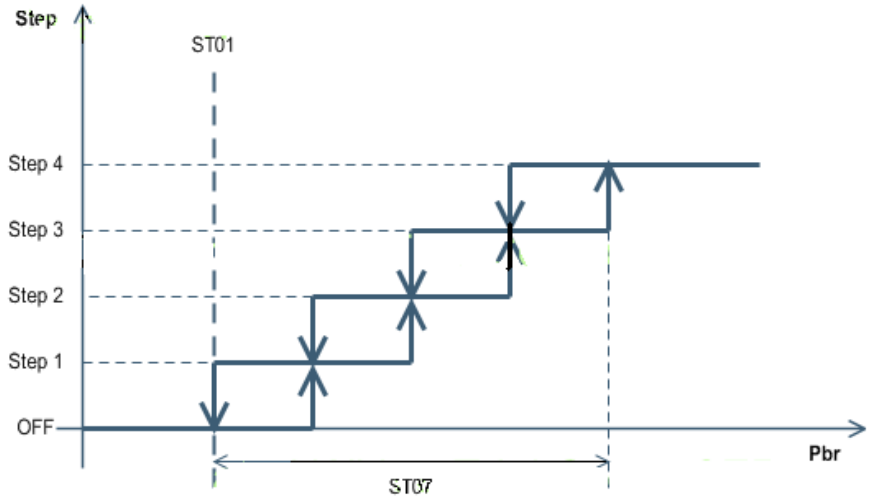

16.2 GRAPH OF THE COMPRESSOR THERMOREGULATION IN HEAT PUMP

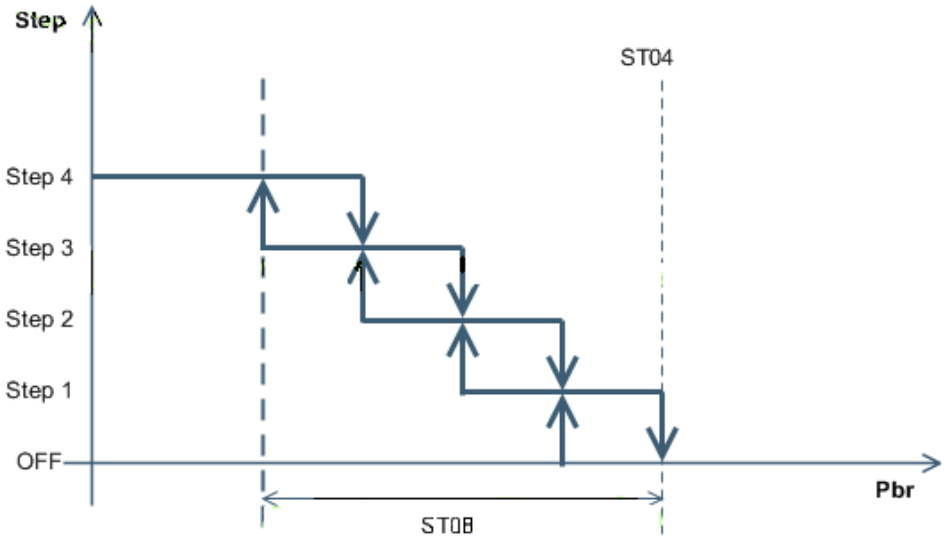

16.3 GRAPH NEUTRAL ZONE COMPRESSOR CONTROL

Compressor regulation in chiller

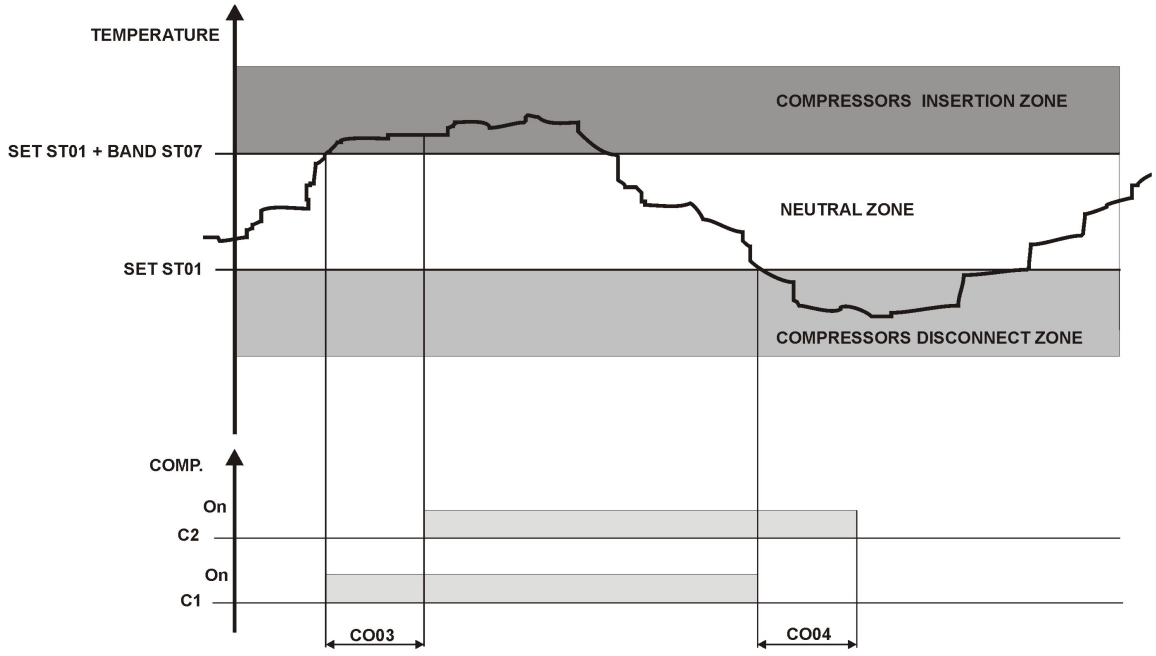

Compressor regulation in heat pump

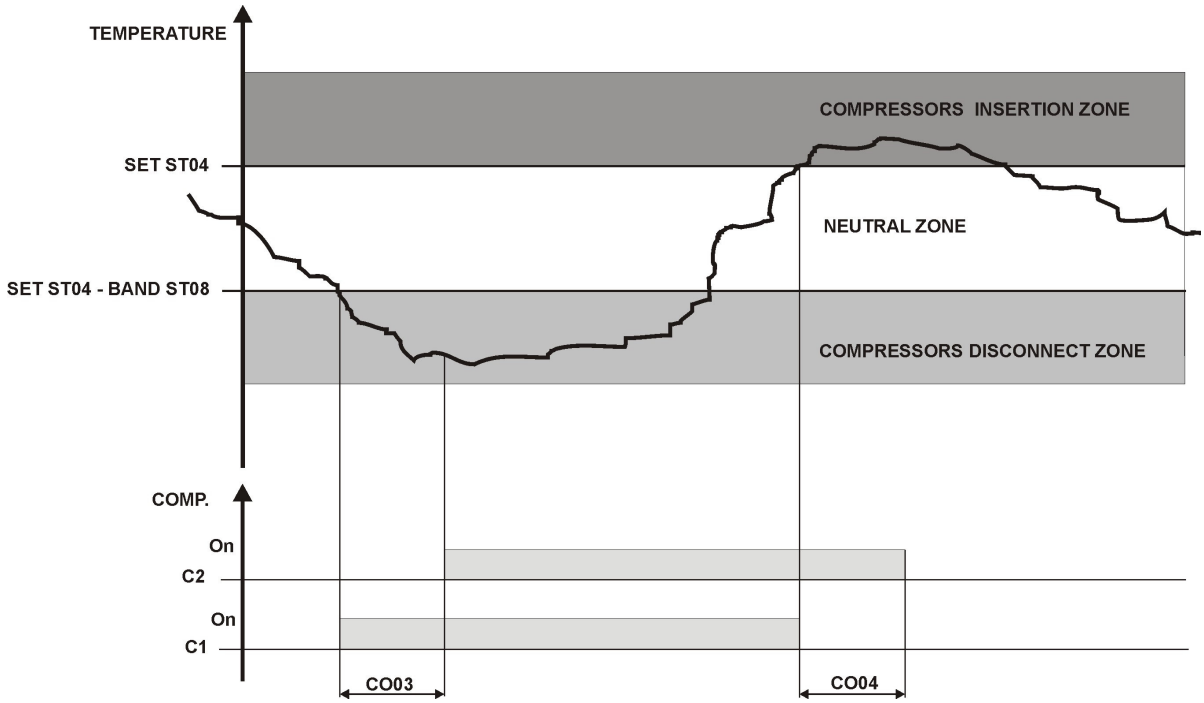

17 COMPRESSOR STATUS INTO THE NEUTRAL ZONE

A particular functioning is scheduled thruogh the rotation or the forced insertion of compressors or spteps during the loads functioning into the neutral zone Par. CO50 / CO51 in order to prevent an extended functioning without compressors functioning interruption.

17.1 MAXIMUM TIME OF NEUTRAL ZONE STAY WITHOUT INSERTION OF RESOURCES WITH AT LEAS ONE RESOURCE INSERTED

Par. CO50
With at least one compressor on, when the functioning is into the neutral zone, is calculated the time set by the par. CO50 after which is forced a compressor or partialization step insertion.
The resolution is fixed on dozen minuts if the parameter value is 0 the function is deactivated.

17.2 MAXIMUM TIME OF NEUTRAL ZONE STAY WITHOUT THE RESOURCES ROTATION

Par. CO51
When the functioning return into the neutral zone, is calculated the time set by the par.CO51 after which the busy compressor is turned off and depending on the rotation, another compressor insertion is forced.
The resolution is fixed on hours if the parameter is 0 the function is deactivated.

17.3 THERMOREGULATION OF THE COMPRESSOR INVERTER CONTROLLED

MANAGEMENT OF COMPRESSORS INVERTER CONTROLLED
The signal 0÷10V is given by one of 4 configurable ouputs of the instrument; it's possible to have up to 2 steps per circuit, 1 modulating comp. and 1 ON/OFF compressor.
Regulation:

- when the compressor is activated the capacity percentage is forced at the maximum speed (CO55 parameter); after this:
  - if the parameter CO56=0 the capacity percentage is forced at maximum speed for CO54 seconds; when CO54 time is elapsed the controller modifies the capacity percentage following thermoregulation requests
  - if the parameter CO56≠0 the capacity percentage is increased of 1% every CO56 seconds. When the capacity percentage reach 100%, the controller modifies the capacity percentage following thermoregulation requests
- when the compressor is working, the capacity percentage is increased/decreased of 1% every CO65 seconds
- when the compressor is working, if the capacity percentage is lower than CO57 value for CO58 minuts, the compressor is forced to work at 100% for CO59 seconds
- if the unit manages two compressor inverter controlled, when one compressor is working continuosly for CO60 hours, it is forced OFF and the other compressor is switched on

UNIT IN CHILLER

Compressor activation:
when the compressor is activated the capacity percentage is forced at the value configured in CO55 parameter for CO54 seconds.

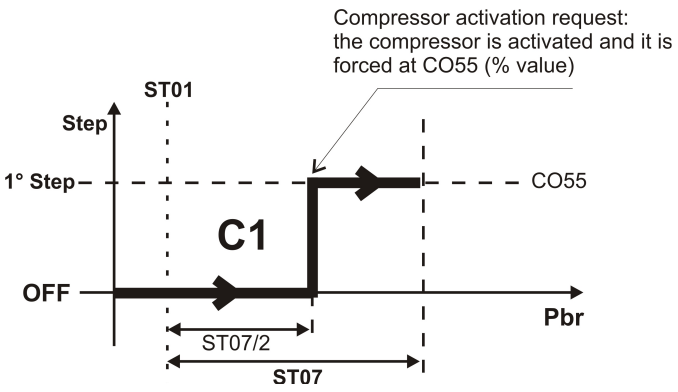

When is requested the activation of the second compressor:

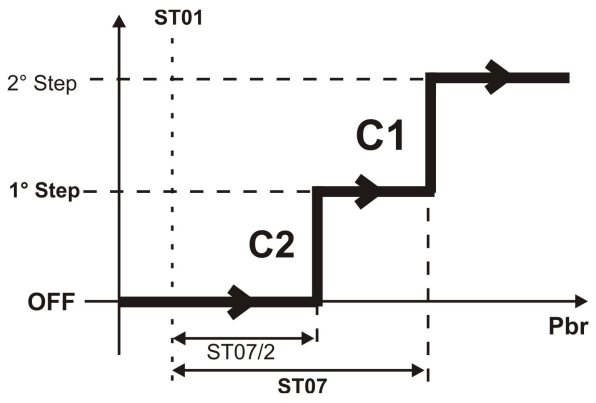

When both compressors are activeted the thermoregulation is done with the variation of the capacity percentage.

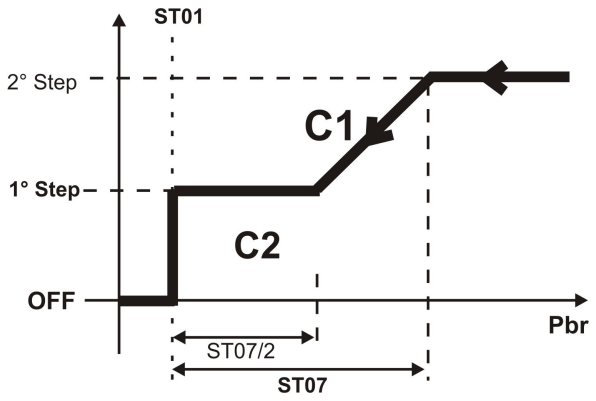

When the thermoregulation switches off the ON/OFF compressor, the controller manages the capacity percentage to follow the real request.

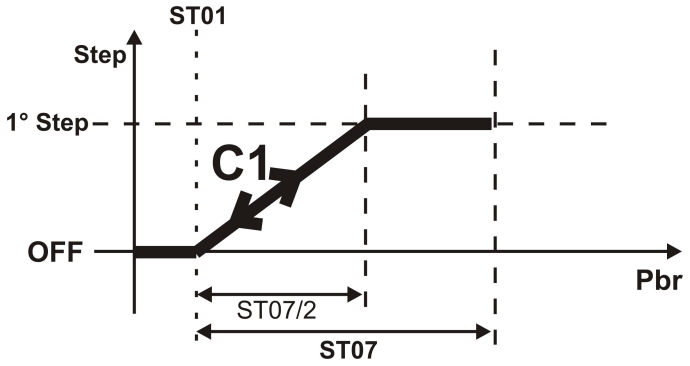

UNIT IN HEAT PUMP

Compressor activation:
when the compressor is activated the capacity percentage is forced at the value configured in CO55 parameter.

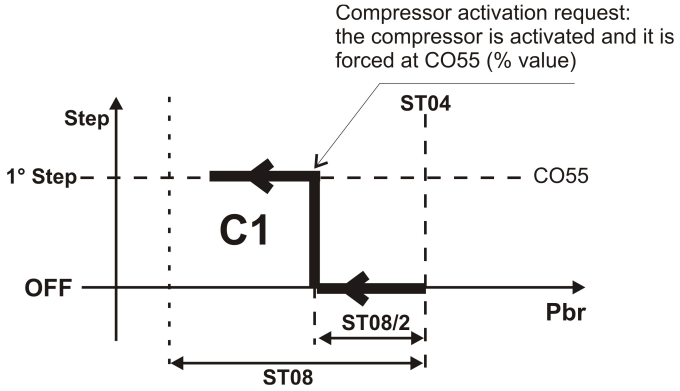

When the thermoregulation requests the activation of the second compressor.

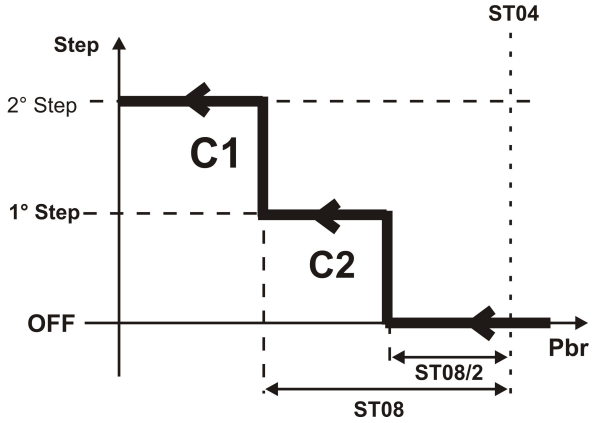

When both compressors are activated the thermoregulation is done with the variation of the capacity percentage.

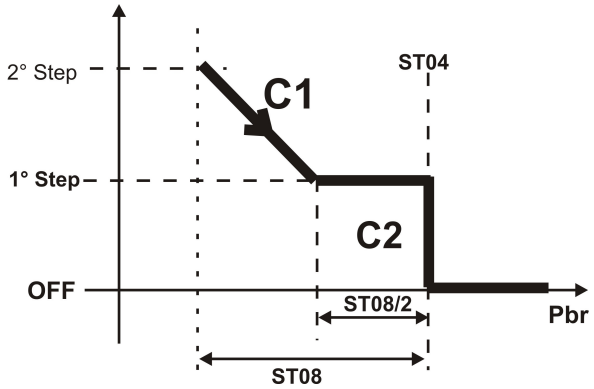

When the thermoregulation switches off the ON/OFF compressor, the controller manages the capacity percentage to follow the real request.

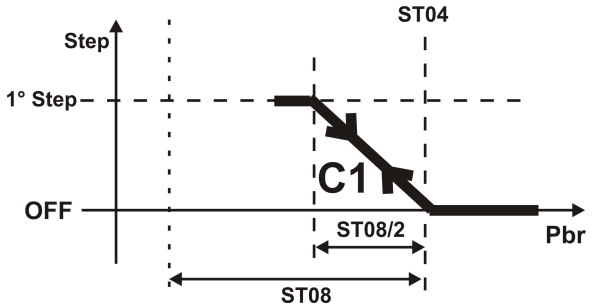

18 THERMOREGULATION AND COMPRESSORS ROTATION

The **CO13** parameter allows to choose the sequence of activation of the compressors.
CO13= 0
Sequential. Depending on the thermoregulation:
Activation sequence: COMP. 1 → COMP.2
Deactivation sequence: COMP.2 → COMP.1
CO13= 1
Rotation by hour. Depending on the time running hours the first compressor called by the thermoregulation is the one with less time running hours. This algorithm is aborted if the unit is configured with one capacity compressor.
CO13= 2
Rotation by starts-up. Depending on the number of starts-up per hour the first compressor called or turned off is the one with less starts-up number. This algorithm is aborted if the unit is configured with one capacity compressor.

19 SATURATION - CIRCUIT BALANCING

CIRCUIT SATURATION
CO14 = 0
Depending on the thermoregulation all the steps of the first circuit are turned on before using the second circuit.

CIRCUIT BALANCING
CO15 = 1: the circuit balancing is applicable only if there are 2 circuits and 2 resources for circuits (1 compressor and 1 capacity step per circuit).
The circuit balancing allow to equalise the power supplied by the two circuits.

COMPRESSOR REGULATION

- When it is turned on each compressor runs for the CO01 minimum time. This minimum time is aborted in case of **alarm, STAND-BY / ON OFF by remote, defrost or partialization through NTC transducer.**
- When it is turned off each compressor can restart only after the CO02 time delay.
- Both for sequential or rotation regulation with compressors or capacity steps: the successive resource is turned on after the CO03 delay in seconds.
- Both for sequential or rotation regulation with compressors or capacity steps: the successive resource is turned off after the CO03 delay in seconds.
- If the power supply fails **all the outputs are forced off** for the CO005 time delay.

20 COMPRESSORS START-UP

20.1 COMPRESSORS START- UP

Parameter CO10 defines the compressor start-up:
CO10=0 direct start up
CO10=1 part winding start up

20.2 DIRECT START- UP

Configure one relay output for each compressor (K1 relay Fig. 1). One relay output controls the corresponding compressor up to 2 resources.

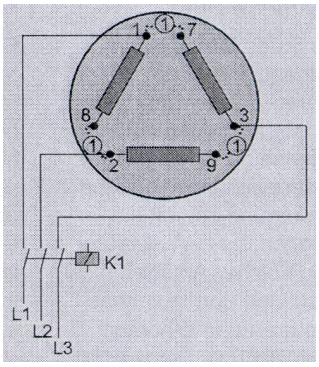

Fig. 1

20.3 DIRECT START- UP OF A CAPACITY COMPRESSOR

When working with capacity compressors and with full power start-up: the controller turns the solenoid valve on first and then, after 1 second, the compressor motor. Durning the CO12 time delay the valve is forced on: minimum power. When the C012 is expired if the thermoregulation requires more power the valve will be switched off (maximum power).

20.4 PART WINDING

This algorithm allows to reduce the start-up current when using hermetic or semi-hermetic compressors or medium – big screw compressors.

Each compressor needs two relay outputs:
- One is the PW motor coil 1 of the compressor;
- One is the PW motor coil 2 of the compressor

The time delay between the two outputs is determined by CO11 expressed in decimal of second.
The maximum number of relay outputs is 4 this means 2 compressors with Part Winding start-up.

First is turned on the PW motor coil 1 of the compressor 1 (relay K1 of fig2), after the CO11 delay it is turned on the second motor coil of the same compressor (relay K2 of fig2).
To turn off the compressor the two relay outputs are both turned off at the same time.

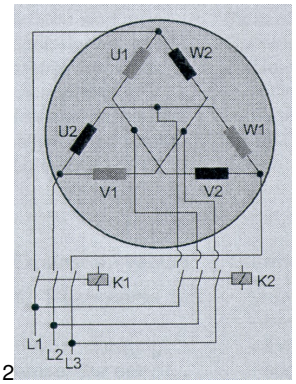

Fig 2

20.5 PART WINDING START- UP OF COMPRESSORS OR CAPACITY COMPRESSORS

If one or more capacity compressors are configured and the thermoregulation requires the full load start-up: the controller turns the solenoid valve on, after 1 second the first motor part of the 1st compressor (relay K1 of Fig. 2) and then the complete control with the contactor K2. Durning the CO12 time delay the step valve is forced on: minimum power. When the C012 is expired if the thermoregulation requires more power the valve will be switched off (maximum power).

21 CAPACITY CONTROL

Only the compressor 1 can be configured with 3 capacity step.

CO06 capacity control operative mode.
The relay configured as capacity control are managed by the thermoregulation as shown in the graph and into the tables here below.
Par CO06 = 0 ON/OFF step
0= Step control. Depending on the thermoregulation requests and the output polarity a power step can be enabled or disabled. The step is activated only after the previous is turned off.

Eg: 1 capacity compressor with 3 partializations: 4 Power steps.

Capacity	**25%**	**50%**	**75%**	**100%**
Compr.	Compressor **ON**	Compressor **ON**	Compressor **ON**	Compressor **ON**
Out relay	Step P 1 **ON**	Step P 1 **OFF**	Step P 1 **OFF**	Step P 1 **OFF**
Out relay	Step P 2 **OFF**	Step P 2 **ON**	Step P 2 **OFF**	Step P 2 **OFF**
Out relay	Step P 3 **OFF**	Step P 3 **OFF**	Step P 3 **ON**	Step P 3 **OFF**

Step control process

Compressor	**Part 1**	**Part 2**	**Part 3**

Power involved
0 %
25 %
50 %
75 %
100 %

Par CO06 = 1 direct action with sequential step

1= the steps are turned on in sequential mode, the outputs are anabled or disabled depending on the output polarity. In case of thermoregulation request one of the step is turned on or off while the other steps do not change their status.

Eg: 1 capacity compressor with 3 partializations: 4 Power steps.

Capacity	**25%**	**50%**	**75%**	**100%**
Compr.	Compressor **ON**	Compressor **ON**	Compressor **ON**	Compressor **ON**
Out relay	Step P 1 **ON**	Step P 1 **ON**	Step P 1 **ON**	Step P 1 **OFF**
Out relay	Step P 2 **OFF**	Step P 2 **ON**	Step P 2 **ON**	Step P 2 **OFF**
Out relay	Step P 3 **OFF**	Step P 3 **OFF**	Step P 3 **ON**	Step P 3 **OFF**

Direct action with sequential step

Compressor	**P1**	**P2**	**P3**

Power involved
0 %
25 %
50 %
75 %
100 %

Par CO06 = 2 inverse action with sequential step
1= the steps are turned on in sequential mode, the outputs are anabled or disabled depending on the output polarity. In case of thermoregulation request one of the step is turned on or off while the other steps do not change their status.

Eg: 1 capacity compressor with 3 partializations: 4 Power steps.

Capacity	**25%**	**50%**	**75%**	**100%**
Compr.	Compressor **ON**	Compressor **ON**	Compressor **ON**	Compressor **ON**
Out relay	Step P 1 **ON**	Step P 1 **ON**	Step P 1 **ON**	Step P 1 **OFF**
Out relay	Step P 2 **ON**	Step P 2 **ON**	Step P 2 **OFF**	Step P 2 **OFF**
Out relay	Step P 3 **ON**	Step P 3 **OFF**	Step P 3 **OFF**	Step P 3 **OFF**

Inverse action with sequential step

Compressor	**P1**	**P2**	**P3**

Power involved
0 %
25 %
50 %
75 %
100 %

Par CO06 = 3 Continuous with steps and direct total action
3 = the steps are turned on in sequential mode, the outputs are anabled or disabled depending on the output polarity. In case of thermoregulation request one of the step is turned on or off while the other steps do not change their status.

Eg: 1 capacity compressor with 3 partializations: 4 Power steps.

Capacity	**25%**	**50%**	**75%**	**100%**
Compr.	compressor **ON**	compressor **ON**	compressor **ON**	compressor **ON**
Out relay	Step. N° 3 **OFF**	Step N° 3 **OFF**	Step. N° 3 **OFF**	Step. N° 3 **ON**
Out relay	Step N° 2 **OFF**	Step. N° 2 **OFF**	Step. N° 2 **ON**	Step. N° 2 **ON**
Out relay	Step. N° 1 **OFF**	Step N° 1 **ON**	Step N° 1 **ON**	Step N° 1 **ON**

Direct action with sequential step

Compressor	**P1**	**P2**	**P3**

Power involved
0 %
25 %
50 %
75 %
100 %

ATTENTION
When working with capacity control in sequential step in direct or reverse modes: if the power requested is 50% and 75% the unit turn on also the step 25% that must be enabled to make run the other two.

21.1 MINIMUM LOAD START- UP

Par. CO07 configuration of the start-up with minimum load and compressor type.
It allows to configurate the 1st partialization valve of the compressor that can be the partialization start-up valve of an alternative compressor or the minimum load for screw compressor.
In this way the lower value of partialization (normally is configured as the 1st output with the 25%) can be used as minimum start-up load and also as thermoregulation step or only as minimum start-up load and never as thermoregulation step.
EXAMPLE

Having one compressor with 3 partializations, at the compressor start-up, with **CO07=0**, the partialization valve is enabled only for the time CO12 but it won't be never used during the thermoregulation. After the compressor stops running the time CO12 will be reloaded.
Having one compressor with 3 partializations, at the compressor start-up, with **CO07=1**, the partialization valve is enabled for the time CO12 and it will be considered also as thermoregulation step. After the compressor stops running the time CO13 will be reloaded.

EXAMPLE WITH SCREW COMPRESSOR
Having one compressor with 3 partializations, with **CO07=2** when the compressor is off the partialization valve is always on, so as, in case of start-up, it allows to have the minimum load. After the compressor is started the valve is on only for CO12 time and it won't be considered as regulation step. After the compressor stops running the time CO12 will be reloaded.
Having one compressor with 3 partializations, with **CO07=3** when the compressor is off the partialization valve is always on, so as, in case of start-up, it allows to have the minimum load. After the compressor is started the valve is on for CO12 time but it will be considered as regulation step. After the compressor stops running the time CO12 will be reloaded.

21.2 BY- PASS GAS VALVE DURING COMPRESSOR START- UP

It allows to manage, with the partialization valve, also the valve to run the compressor with no load by-passing the circuit.
On time of the by-pass gas valve during the compressor start-up.
The funcrion is enabled if the CO12≠0 and one of the relay output is configured as by-pass valve compressor 1 or 2.
Functionning: When thermoregulation requires the relay is turned ON 1 second before turning in the compressor and goes off after the time set in parameter CO12. After the compressor stops running the time CO12 will be reloaded.

21.3 SOLENOID VALVE INTERMITTENT FOR SCREW COMPRESSOR

If configured this output is ON when the compressor is ON (in case of Part Winding it corresponds with the first relay on) for the time set in Par. CO08 and then OFF for the time set in Par. CO09. The cycle CO08 – CO09 of the valve is repeated until the compressor is ON.
ATTENTION:
When the valve output is configured, the intermittent cycle is activated only if the Par. CO08≠0.

22 THERMOREGULATION OF THE COMPRESSORS WITH DIFFERENT SIZE

The function is enabled if:

- circuit 1 configured with 2 compressors
- weight of the compressors ≠ 0 and different for each one
- thermoregulation neutral zone

CO69	Compressor 1 weight	0	100	%	
CO70	Compressor 2 weight	0	100	%	
CO71	Maximum numbers of start up per hour 0= function disabled	0	60		

Example: circuit 1 with 2 compressors:

- in case of request of thermoregulation, the first compressor to be activated is the compressor with lower size
- if the request increase, the compressor is switched off and is activated the compressor with higher size
- if the request is 100% both compressors are activated (respecting the security time of the compressors)

The regulation is a steps; if two compressors with different size are configured, 3 steps are available.

ATTENTION:
When a compressor reach the maximum number of start up per hour, at the next request of thermoregulation is activated the other compressor.

23 PUMP DOWN

23.1 OFF UNIT WITH PUMP DOWN AND WITH LOW PRESSURE SWITCH CONTROL

The process is enabled if the low pressure switch of the circuit is configured with parameter CO30 = 1 or 3 and one of the relay output is configured as pump-down solenoid circuit 1 or 2 (CO36 = 2 or 4 are related to a pressure switch dedicated to this function or the pressure transducer).
When the thermoregulation requires to stop the compressors, before to turn off the last compressor the solenoid valve is closed. The compressor runs until the low pressure switch connected to the digital input becomes active for a maximum time set in CO33. In this case there is no Low pressure alarm and no alarm message will be displayed, the digital input active function will disable the last running compressor. A possible low pressure alarm could appear only if the digital input is still active after the AL02 time.

If the last compressor stops before the low pressure switch because of the CO33 time-out (maximum compressor on time after turning off the P.D. solenoid valve), the ICHILL calculates the AL28 parameter (maximum number of pump down alarm per hour) and if an alarm occurs the display will show the alarm code, the buzzer and the alarm relay will be on.
If the thermoregulation is stopped via digital input (as remote off) or from chiller/heat pump keys, during the pump down process the chiller or the heat pump led will blink.
When the next thermoregulation restarts the PD solenoid valve turns on and after 1 seconds, if the low pressure switch is not active, the compressors start.
For any compressor alarm events occur the procedure is stopped and the compressor will be stopped.

PAR. CO30 = 3 OFF UNIT WITH PUMP DOWN in CHILLER MODE (No PUMP – DOWN at START-UP)
In Heat pump mode the Pump down process is inhibited and the solenoid valve works in parallel with the compressor.

23.2 PUMP DOWN WITH DEDICATED PRESSURE SWITCH

PAR.CO30 = 1 OFF UNIT WITH PUMP DOWN (No PUMP – DOWN at START-UP)
The function is enabled if one relay output is configured as pump down solenoid valve for circuit 1 and 2 and one digital input as pump down pressure switch of the circuit 1 and 2.
When the thermoregulation is going to stop, before turning off the last compressor, the solenoid valve is closed. The compressor runs until the pump down pressure switch connected to the digital input becomes active for a maximum time set in CO33.
If the last compressor stops before the pump down pressure switch because of the CO33 time-out (maximum compressor on time after turning off the P.D. solenoid valve), the ICHILL calculates the AL28 parameter (maximum number of pump down alarm per hour) and if an alarm occurs the display will show the alarm code, the buzzer and the alarm relay will be on.
If the thermoregulation is stopped via digital input (as remote off) or from chiller/heat pump keys, during the pump down process the chiller or the heat pump led will blink.
When the next thermoregulation restarts the PD solenoid valve turns on and after 1 seconds, if the low pressure switch is not active, the compressors start.
For any compressor alarm events occur the procedure is stopped and the compressor will be stopped.

PAR. CO30 = 2 ON/OFF WITH PUMP DOWN
The function is enabled if one relay output is configured as pump down solenoid valve for circuit 1 and 2 and one digital input as pump down pressure switch of the circuit 1 and 2. (CO30 = 2 or 4 are related to a pressure switch dedicated to this function or the pressure transducer).
When the thermoregulation is going to stop, before turning off the last compressor, the solenoid valve is closed. The compressor runs until the pump down pressure switch connected to the digital input becomes active for a maximum time set in CO39.
If the last compressor stops before the pump down pressure switch because of the CO33 time-out (maximum compressor on time after turning off the P.D. solenoid valve), the ICHILL calculates the AL28 parameter (maximum number of pump down alarm per hour) and if an alarm occurs the display will show the alarm code, the buzzer and the alarm relay will be on.
If the thermoregulation is stopped via digital input (as remote off) or from chiller/heat pump keys, during the pump down process the chiller or the heat pump led will blink.
When the next thermoregulation restarts the PD solenoid valve turns on and after 1 seconds, if the low pressure switch is not active, the compressors start.
If the compressors doesn't restart within the CO33 time the pump-down alarm will signalled and the compressor are stopped. In this case if AL30 =0 the compressor can restart only if the pressure switch becomes active, or if AL30=1 and the number of alarms per hour becomes =AL29 only after the manual reset.

PAR. CO36 = 3 OFF UNIT WITH PUMP DOWN in CHILLER MODE (No PUMP – DOWN at START-UP)
In Heat pump mode the Pump down process is inhibited and the solenoid valve works in parallel with the compressor.

PAR. CO36 = 4 ON and OFF UNIT WITH PUMP DOWN in CHILLER MODE
In Heat pump mode the Pump down process is inhibited and the solenoid valve works in parallel with the compressor.

23.3 PUMP DOWN FUNCTION WITH DEDICATED PRESSURE PROBE

PAR.CO30 = 1 STOP UNIT with PUMP DOWN (No PUMP – DOWN at START-UP)
The function is enabled if one relay output is configured as pump down solenoid valve for circuit 1 and 2 and one analogue input as low pressure probe of the circuit 1 and 2.
When the thermoregulation is going to stop, before turning off the last compressor, the solenoid valve is closed. The compressor runs until the pump down pressure connected to the analogue input reaches the set value in CO31.
If the last compressor stops before the pump down set value because of the CO33 time-out (maximum compressor on time after turning off the P.D. solenoid valve), the ICHILL calculates the AL28 parameter (maximum number of pump down alarm per hour) and if an alarm occurs the display will show the alarm code, the buzzer and the alarm relay will be on.
If the thermoregulation is stopped via digital input (as remote off) or from chiller/heat pump keys, during the pump down process the chiller or the heat pump led will blink.
When the next thermoregulation restarts the PD solenoid valve turns on and after 1 seconds, if the low pressure switch is not active, the compressors start.
For any compressor alarm events occur the procedure is stopped and the compressor will be stopped.

PAR. CO30 = 2 UNIT START/STOP with PUMP DOWN
The function is enabled if one relay output is configured as pump down solenoid valve for circuit 1 and 2 and one analogue input as low pressure probe of the circuit 1 and 2.
When the thermoregulation is going to stop, before turning off the last compressor, the solenoid valve is closed. The compressor runs until the pump down pressure probe connected to the analogue input reaches the setpoint in CO31.

If the last compressor stops before the pump down pressure switch because of the CO33 time-out (maximum compressor on time after turning off the P.D. solenoid valve), the ICHILL calculates the AL28 parameter (maximum number of pump down alarm per hour) and if an alarm occurs the display will show the alarm code, the buzzer and the alarm relay will be on.
If the thermoregulation is stopped via digital input (as remote off) or from chiller/heat pump keys, during the pump down process the chiller or the heat pump led will blink.
When the next thermoregulation restarts the PD solenoid valve turns on and after 1 seconds, if the pressure probe is higher then CO31, the compressors start.
If the compressors do not restart within the CO33 time the pump-down alarm will signalled and the compressor are stopped. In this case if AL30 =0 the compressor can restart only if the pressure switch becomes active, or if AL30=1 and the number of alarms per hour becomes =AL29 only after the manual reset.

PAR. CO30 = 3 START UNIT WITH PUMP DOWN in CHILLER MODE (No PUMP – DOWN at START-UP)
In Heat pump mode the Pump down process is inhibited and the solenoid valve works in parallel with the compressor.

PAR. CO30 = 4 UNIT START/STOP WITH PUMP DOWN in HEAT PUMP
In Heat pump mode the Pump down process is inhibited and the solenoid valve works in parallel with the compressor.

23.4 PUMP DOWN ALARM DURING COMPRESSORS START- UP

ACTIVATION

If within the CO33 delay time (Maximum pump down restart time) the compressor/s do not restart because of the low pressure, the instrument will signal B1PL (pump down alarm at the start-up of the circuit 1) or the label B2PL (pump down alarm at the start-up of the circuit 2). With active alarm the restart procedure is disabled. The alarms can be:

- with Automatic Reset that is not logged, the buzzer and alarm relay are not activated.
- with Manual Reset that is logged, the buzzer and alarm relay are activated.

The parameter **AL29** determines the number of pump down alarm events to turn from automatic to manual reset
The Reset is always manual if AL29 = 0
The Reset is always automatic if AL29 = 16
The reset becomes manual after AL29 = 1 ..15 events and the configuration of Par. AL30.
Par. **AL30** defines if the reset of the AL29 alarm events can be forced from manual to automatic. In this case the alarm events, after reaching AL29, is automatically reset but it is logged while the buzzer and the alarm relay are on.
In this way, in case of particularly critical condition, the unit restarts working without the help of the maintenance personnel.

RESET

- The Automatic Reset is activated when the next compressor thermoregulation is requested, in this case the pressure condition of the pump down must be satisfied.
- The Manual Reset needs to enter the function Menu under the **AlrM** label. After the reset the next thermoregulation restarts if the pump down pressure is in normal condition.

ATTENTION
If the pump down function is enabled, during the unit start-up from digital input as pump down pressure switch and also from analogue input as low pressure transducer, the compressor will restart only if both the inputs are satisfied.

23.5 PUMP DOWN ALARM DURING COMPRESSORS SWITCHING OFF

ACTIVATION

If within the time delay CO33 (maximum pump down duration in off) the low pressure switch or the pump down pressure switch is not active or the pump down setpoint is not reached, the last compressor is switched off. In this case after this timeout the instrument signals the B1PH or 2 alarms, in both cases when active the compressor is stopped.

The alarm can be:

- with Automatic Reset that is not logged, the buzzer and alarm relay are not activated.
- with Manual Reset that is logged, the buzzer and alarm relay are activated.

The Parameter **AL28** determines the number of pump down alarm events to turn from automatic to manual reset
The Reset is always manual if AL28 = 0.
The Reset is always automatic if AL28 = 16.
The reset becomes manual after AL28 = 1 ..15.

RESET

- The Automatic Reset is activated when the next compressor thermoregulation is requested, in this case the pressure condition of the pump down must be satisfied.
- The Manual Reset needs to enter the function Menu under the **AlrM** label. After the reset the next thermoregulation restarts if the pump down pressure is in normal condition.

ATTENTION
If the pump down function is enabled, during the unit start-up from digital input as pump down pressure switch and also from analogue input as low pressure transducer, the compressor will restart only if both the inputs are satisfied.

23.6 PUMP DOWN BY DELAY TIME

It is possible to have the pump down procedure also without pressostat or pressure trasducers ; in this case, by configuring CO52 and CO53, the compressor is switched off after CO52 time starting from pump down valve activation and switched on after CO53 time starting from pump down valve deactivation.

CO 52	Maximum time for the activation of the pump-down during the switching off CO52 = 0 Not enabled	0	250	Sec	
CO 53	Maximum time for the activation of the pump-down during the switching on CO53 = 0 Not enabled	0	250	Sec	

24 UNLOADING

24.1 HIGH TEMPERATURE OF THE EVAPORATOR WATER INLET

The function is always enabled in chiller mode if there are at least 2 steps of capacity (circuit 1 with two compressor or 1 compressor with partialization per circuit).
It is used to run the unit with high temperature of the evaporator water inlet (such as during the hot summer) to avoid a possible high pressure alarm event.
The function si managed through an analogue input configured as NTC evaporator water inlet and, when active, reduces the number of steps according to the value of the CO46 parameter.

24.2 UNLOADING DESCRIPTION

UNLOADING ACTIVATION
The function is active in chiller mode, when the evaporator water inlet is equal or bigger than the CO34 setpoint for the CO36 time.
When the unloading is active the display shows the AEUn blinking message alternated with the selected display measurement; the unit will start with the loads selected with the CO46 parameter.

UNLOAD DEACTIVATION
If the temperature decreases under the value determined by (CO34-CO35) parameter, the unloading is disengaged and all the compressors are available for the thermoregulation.

24.3 UNLOADING INFORMATION

If the evaporator inlet temperature is lower than CO34 but higher than CO34-CO35, to avoid a prolonged working time in unloading status, a timer is activated to disable the unloading function.
This time starts when the evaporator inlet temperature is lower than CO34 and, when elapsed, the unloading function is disabled.

24.4 UNLOADING WITH PRESSURE / CONDENSING TEMPERATURE OR EVAPORATING PRESSURE CONTROL

The function is always enabled for both chiller and heat pump mode in order to reduce the load and helps the unit to start: in chiller for high temperature of the external air (to avoid high pressure alarms), in heat pump for low temperature of external air (to avoid the low pressure alarms).
The compressor unloading in chiller mode is managed by the analogue input configured as condenser probe circuit 1 or 2 and determined by CF07 (0=temperature, 1 = pressure).
The compressor unloading in heat pump mode is managed by the analogue input configured as evaporator probe circuit 1 or 2.
If the application has only one condendenser, to guarantee the right operation of the unloading is necessary to configure both condenser probes/trasducers, one for each circuit.

24.5 REGULATION IN CHILLER MODE

ACTIVATION IN CHILLER MODE
When the condenser pressure/temperature is equal or bigger than CO41 setpoint the unloading process is engaged. The bottom display shows, alternated with the measurement, the **b1Cu** or **b2Cu** labels (depending of the circuit involved). When the function is active, the number of working compressors/step is determined by the CO46 parameter.

DE-ACTIVATION in CHILLER MODE
If the temperature decreases under the value determined by CO41-CO42 (setpoint – differential), the unloading is disengaged, the compressors are all available for the thermoregulation.

OTHER INFORMATION ABOUT THE UNLOADING IN CHILLER
If the condenser pressure/temperature is higher than CO41 but lower than CO41-CO42, to avoid a prolonged working time in unloading status, a timer is activated to disable the unloading function.
This time starts when the evaporator inlet temperature is higher than CO41 and, when elapsed, the unloading function is disabled.

24.6 REGULATION IN HEAT PUMP MODE

UNLOADING IN HEAT PUMP MODE
The compressor unloading in heat pump mode is managed by the analogue input configured as evaporator probe circuit 1 or 2.
When the heat pump thermoregulation request begins to start the compressors, if the evaporator pressure/temperature is equal or lower than CO43 setpoint the unloading process, of that circuit probe, is engaged. The bottom display shows (alternated with the measurement) the **b1Cu** (circuit 1) or **b2Cu** (circuit 2) labels. When the function is active, the number of working compressors/step is determined by the CO46 parameter.

UNLOAD DE-ACTIVATION in HEAT PUMP MODE
If the evaporator temperature is higher than the value determined by CO43+CO44 (setpoint +differential), the unloading is disengaged, the compressors are all available for the thermoregulation.

OTHER INFORMATION ABOUT THE UNLOADING IN HEAT PUMP
If the pressure/temperature is higher than CO43 but lower than CO43+CO44, to avoid a prolonged working time in unloading status, a timer is activated to disable the unloading function.
This time starts when the evaporator inlet temperature is higher than CO43 and, when elapsed, the unloading function is disabled.

24.7 LOW TEMPERATURE OF THE EVAPORATOR WATER OUTLET

ACTIVATION
The lower value between the inlet evaporator probe, common outlet evaporator probe or outlet probe for the circuit, enable the unloading function.
When the value of one of the probes above goes down under the set point CO38 the unloading function is activated; the number of active compressors/step is determined by the CO46 parameter.
The display shows the label **b1EU – b2EU** alternated to a default visualization.

DE-ACTIVATION
Unloading function is disabled when the temperature of all the probes configured rise over CO38 + CO39 or when the CO40 time is elapsed.

25 SOLENOID VALVE FOR LIQUID INJECTION

The function is enabled when one output relay is configured as solenoid valve compressor 1 and one analogue input is configured as discharge temperature of compressor 1.

25.1 FUNCTIONNING

When the **compressor is off** the solenoid valve output **is always OFF**.
When the compressor is on if the PTC temperature of the compressor discharge reaches CO48 setpoint, the valve turns ON; when the temperature decreases under C48-CO49 (set- differential) the valve turns off.

ATTENTION
The display resolution is 0.1°C until the read-out is 99.9, over 100°C it is 1°C.

26 WATER PUMP OF THE EVAPORATOR / SUPPLY FAN

26.1 WATER PUMP OF THE EVAPORATOR / SUPPLY FAN (AIR/AIR UNIT)

Operative modes of the evaporator pump / supply fan
CO15=0: Not enabled: water pump/supply fan not managed.
Attention: The air / air unit configured with CO15= 0 does not manage the output for integration heaters.
CO15 = 1: Continuous control type 1.
The water pump/ supply fan are running only if the unit is running (in chiller or heat pump). After giving the start in chiller or heat pump mode the compressor regulation starts only after the time delay CO16.
The water pump/ supply fan are turned off only when the unit is turned off (stand-by) and, if CO17≠0, the water pump/ supply fan turns off only after the this delay.
When the unit is in stand-by or remote off and the parameter Ar21=1, if the antifreeze thermoregulation requires the water pump is turned on.
CO15 = 2: on compressor demand.
When the compressor turns on also the water pump/ supply fan are turned on. In both chiller and heat pump modes the water pump/ supply fan starts CO16 before the compressor. When the last compressor is turned off the water pump/ supply fan is turned of after the CO17 delay.
When the unit is in stand-by or remote off and the parameter Ar21=1, if the antifreeze thermoregulation requires the water pump is turned on.
CO15 = 3: Continuous control type 2.
The water pump/ supply fan are always running (when the unit is on and when the unit is in OFF or STD-BY).
After the power on the compressor regulation starts with a delay of CO16 from pump activation.

When the unit is in stand-by or remote off and the parameter Ar21=1, if the antifreeze thermoregulation requires the water pump is turned on.
CO15 = 4: modulating control type 1.
The water pump/ supply fan are running only if the unit is running (in chiller or heat pump). After giving the start in chiller or heat pump mode the compressor regulation starts only after the time delay CO16.
The water pump / supply fan are turned off only when the unit is turned off (stand-by/remote OFF); in this case the pump is forced at maximum speed and then switched off.
When the unit is in stand-by or remote off and the parameter Ar21=1, if the antifreeze thermoregulation requires the water pump is turned on.
The pump, if activated, works as described below (par. 38); when the compressor is OFF or when the unit is in OFF or STD-BY the pump is forced at CO81 speed.
CO15 = 5: modulating control on compressor demand.
When the compressor turns on also the water pump/ supply fan are turned on; in this case the pump is forced at maximum speed for CO80 seconds then the compressor is activated (after CO16 if ≠0).
When the last compressor is turned off the water pump/ supply fan is forced at maximun speed for CO82 seconds and then switched off.
The pump, if activated, works as described below (par. 38)
CO15 = 6: modulating control type 2.
The water pump / supply fan are always running (if the unit is running in chiller or heat pump but also if the unit is OFF or STD-BY); when the unit is OFF or STD-BY or when the compressor is OFF the pump is forced at CO81 speed.
After the power on the compressor regulation starts only after the time delay CO16 from pump activation.
When the unit is in stand-by or remote off and the parameter Ar21=1, if the antifreeze thermoregulation requires the water pump is turned on.
The pump, if activated, works as described below (par. 38).

During the defrost and when the compressor is off in dripping time the pump/supply fan is on.

26.2 HOT START (SUPPLY FAN) ONLY FOR AIR / AIR UNIT IN HEAT PUMP MODE

The hot start function is available only for air/air unit configured with heat pump and it is active only during the heat pump mode.
It allows to start the supply fan only if the evaporating/condensing probe temperature is hot enough to avoid to introduce cold air flows.
FA24 Hot start Setpoint.
It is the temperature setpoint to stop the supply fan when the NTC probe of the evaporator #1 output or the evaporator #2 output or the evaporator common output value is lower.
FA25 Hot start differential
Temperature differential of the hot start function.

26.3 SUPPLY FAN OPERATION WITH DIGITAL INPUT AND RTC

This function can be enabled only if the controller has the clock on board.
If a digital input is configured as “operation with only supplay fans”, the supplay fan are activated according to digital input status and time band to power on/off the unit (by clock on board).

27 EVAPORATOR PUMP GROUP

If two relay outputs are configured as evaporator water pump and support pump automatically the pump group control is enabled.
First start-up of the unit with running hours of the two pumps are both 0: if CO15=1 or 2 (continuous or on compressor demand pump mode) by default the pump n°1 is turned on. The successive restart of the unit is made with the pump n°2.
During the normal functioning condition when the unit changes from a stand-by /remote off/ power off status to chiller or heat pump mode the pump that is running is switched off and immediately the one with less running hours is turned on.
When the unit goes in stand-by or remote off the pump stays on for the time set in CO17; next pump to be activated is the pump with less working hours.
When the unit is in stand-by or remote off and the parameter Ar21=1, if the antifreeze thermoregulation requires the water pump is turned on.

27.1 EVAPORATOR WATER PUMP ROTATION

Par. **CO18≠**0 to enable the function.
During the normal functionning condition if one pump reaches the running hours of the CO18 parameter, the pump is turned off while the other pump is activated.
If the CO19≠0, before changing from one to the other, the two pumps work together for the time set in this parameter. If CO19=0 the rotation is immediate.

ATTENTION
The CO16/CO17 values (on and off delay between compressors and pumps) are calculated also for the pump group.

27.2 EVAPORATOR WATER PUMP ROTATION THROUGH DIGITAL INPUT CONTROL

With two digital inputs configured as overload alarm of water pump and support pump the rotation is enabled when the digital input of the running pump becomes active. That pump is turned off while the other is forced on.
If the digital inputs are configured as evaporator water pump alarm and condenser water pump alarm the active digital input alarm stops the corresponding pump.

Note: During the defrost and when the compressor is off in dripping time the pump is on.

28 WATER PUMP OF THE CONDENSER

28.1 CONDENSER WATER PUMP CONTROL

Operative mode of the condenser water pump
CO20 = 0 Not enabled, pump not controlled.
CO20 = 1: Continuous control type 1.
The water pump is running only if the unit is running (in chiller or heat pump). After giving the start in chiller or heat pump mode the compressor regulation starts only after the time delay CO16.
The water pump is turned off only when the unit is turned off (stand-by) and, if CO21≠0, the water pump turns off only after the this delay.
When the unit is in stand-by or remote off and the parameter Ar21=1, if the antifreeze thermoregulation requires the water pump is turned on.
CO20 = 2: on compressor demand.
When the compressor turns on also the water pump is turned on. In both chiller and heat pump modes the water pump starts CO16 before the compressor. When the last compressor is turned off the water pump is turned of after the CO21 delay.
When the unit is in stand-by or remote off and the parameter Ar21=1, if the antifreeze thermoregulation requires the water pump is turned on.
CO20 = 3: Continuous control type 2.
The water pump is always running (when the unit is on and when the unit is in OFF or STD-BY).
After the power on the compressor regulation starts with a delay of CO16 from pump activation.
When the unit is in stand-by or remote off and the parameter Ar21=1, if the antifreeze thermoregulation requires the water pump is turned on.
CO20 = 4: modulating control type 1.
The water pump is running only if the unit is running (in chiller or heat pump). After giving the start in chiller or heat pump mode the compressor regulation starts only after the time delay CO16.
The water pump is turned off only when the unit is turned off (stand-by or remote OFF); in this case the pump is forced at maximum speed and then switched off.
When the unit is in stand-by or remote off and the parameter Ar21=1, if the antifreeze thermoregulation requires the water pump is turned on.
The pump, if activated, works as described below (par. 38); when the compressor is OFF or when the unit is in OFF or STD-BY the pump is forced at CO92 speed.
CO20 = 5: modulating control on compressor demand.
When the compressor turns on also the water pump is turned on; in this case the pump is forced at maximum speed for CO91 seconds then the compressor is activated (after CO16 if ≠0).
When the last compressor is turned off the water pump is forced at maximum speed for CO93 seconds and then switched off.
CO20 = 6: modulating control type 2.
The water pump is always running (if the unit is running in chiller or heat pump but also if the unit is OFF or STD-BY); when the unit is OFF or STD-BY or when the compressor is OFF the pump is forced at CO92 speed.
After the power on the compressor regulation starts only after the time delay CO16.
When the unit is in stand-by or remote off and the parameter Ar21=1, if the antifreeze thermoregulation requires the water pump is turned on.
The pump, if activated, works as described below.

During the defrost and when the compressor is off in dripping time the pump fan is on.

29 PUMP GROUP OF THE CONDENSER

If two relay outputs are configured as condenser water pump and support pump of the condenser automatically the pump group control is enabled.
First start-up of the unit with running hours of the two pumps are both 0: if CO20=1 or 2 (continuous or on compressor demand pump mode) by default the pump n°1 is turned on. The successive restart of the unit is made with the pump n°2.
During the normal functioning condition when the unit changes from a stand-by /remote off/ power off status to chiller or heat pump mode the pump that is running is switched off and immediately the one with less running hours is turned on.
When the unit goes in stand-by or remote off the pump is switched off after the time set in CO21; next pump to be activated is the pump with less working hours.
When the unit is in stand-by or remote off and the parameter Ar21=1, if the antifreeze thermoregulation requires the water pump is turned on.

29.1 CONDENSER WATER PUMP ROTATION

Par. **CO22** ≠ 0 to enable the function.
During the normal functioning condition if one pump reaches the running hours of the CO22 parameter, the pump is turned off while the other pump is activated.
If the CO23 ≠0, before changing from one to the other the two pumps work together for the time set in this parameter. If CO23=0 the rotation is immediate.

ATTENTION
The CO16/CO21 values, on and off delay between compressors and pumps, are calculated also for the pump group.

29.2 CONDENSER WATER PUMP ROTATION THROUGH DIGITAL INPUT CONTROL

With two digital inputs configured as overload alarm of water pump and support pump the rotation is enabled when the digital input of the running pump becomes active. That pump is turned off while the other is forced on.
If only one digital input is configured as condenser water pump alarm or only as condenser water pump alarm the active digital input alarm stops the corresponding pump.

During the defrost and when the compressor is off in dripping time the pump is on.

30 MODULATING OPERATION OF THE PUMPS

OUT 1 and OUT 2 can be configured to manage a water pump in modulating control.
Configuration of the parameters CO15 (evaporator pump) and CO20 (condenser pump):
Evaporator water pump:
CO15=4 Continuous control type 1
CO15=5 On compressor demand
CO15=6 Continuous control type 2

Condenser water pump:
CO20=4 Continuous control type 1
CO20=5 On compressor demand
CO20=6 Continuous control type 2

Modulating control type 1
The water pump is running only if the unit is running (in chiller or heat pump). After giving the start in chiller or heat pump mode the compressor regulation starts only after the time delay CO16.
The water pump is turned off only when the unit is turned off (stand-by); in this case the pump is forced at maximum speed (parameters CO82 and CO93) and then switched off.
When the unit is in stand-by or remote off and the parameter Ar21=1, if the antifreeze thermoregulation requires the water pump is turned on.
The pump, if activated, works as described below; when the compressor is OFF the pump is forced at CO81 or CO92 speed.

Modulating control on compressor demand
When the compressor turns on also the water pump is turned on; in this case the pump is forced at maximum speed for CO80 or CO91 seconds then the compressor is activated (after CO16 if $\neq 0$).
When the last compressor is turned off the water pump is forced at maximum speed for CO82 or CO93 seconds and then switched off.

CO15 = 6: modulating control type 2.
The water pump is always running (if the unit is running in chiller or heat pump but also if the unit is OFF or STD-BY); when the unit is OFF or STD-BY or when the compressor is OFF the pump is forced at CO81 or CO92 speed.
After the power on the compressor regulation starts only after the time delay CO16.
When the unit is in stand-by or remote off and the parameter Ar21=1, if the antifreeze thermoregulation requires the water pump is turned on.
The pump, if activated, works as described below.

Modulating control of the evaporator pump in Chiller mode:

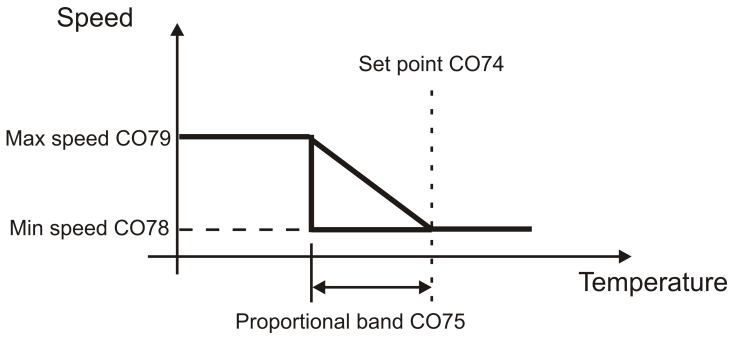

Modulating control of the evaporator pump in Heat pump mode:

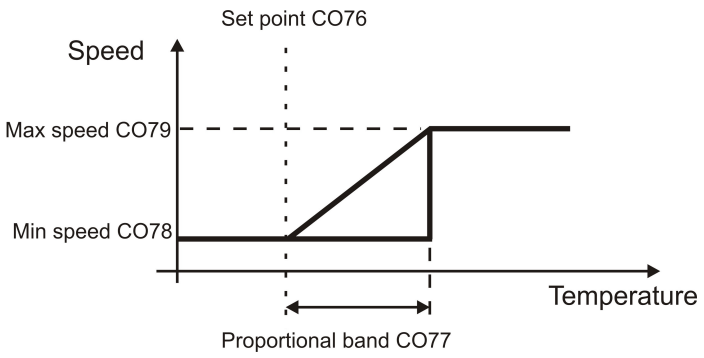

Modulating control of the condenser pump in Chiller mode:

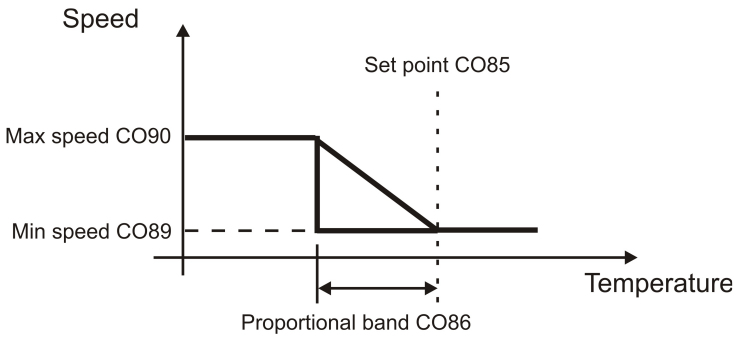

Modulating control of the condenser pump in Heat pump mode:

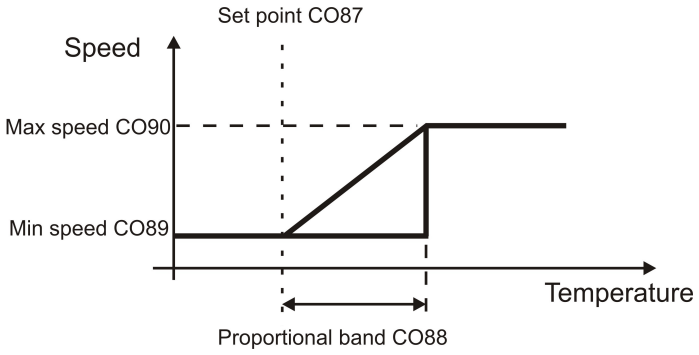

31 CONDENSER FAN REGULATION

With the parameters CF43..CF46 is possible to select the analog output (OUT1..OUT4) and the signal to manage the condenser fan in proportional mode.
If the condenser fan is managed by PWM output, the parameter CF54 “Power supply frequency” has to be configured different to 0.
This parameter allows to select the power supply frequency (50Hz or 60Hz) and enable/disable the frequency alarm.
If the condenser fan is not managed by PWM output, set the parameter CF54= 0.

The **FA01** and **FA02** parameters define the operative mode of the condenser fans.
Par. **FA01** Fan regulation
0 = Output not enabled
1 = Always on
2 = ON/OFF step regulation
3 = ON/OFF continuous step regulation
4 = proportional fan speed
Par. **FA02** Fan operative mode
0 = Fan on only if compressor on
1 = Independent from the compressor, off during the stand–by / or from remote OFF
Parameter combination **FA01 – FA02**
Par. **FA01** = **1** + Par. **FA02 = 0**
Fans on when the compressor on (the fans work following the same output algorithm)

Par. **FA01** = **1** + Par. **FA02 = 1**
Independent from the compressor status but off in stand–by.
Par. **FA01** = **2** + Par. **FA02** = **0**
Fans on, with ON/OFF regulation and with temperature/pressure transducer control, only when the compressor is on (at least one relay is configured as fan control). When the compressor turns off also the fans are forced off.
Par. **FA01** = **2** + Par. **FA02** = **1**
Fans on, with ON/OFF regulation and with temperature/pressure transducer control, only when the compressor is on (at least one relay is configured as fan control). When the compressor turns off the fans are thermoregulated depending on the condensing temperature/pressure.
Par. **FA01** = **3** + Par. **FA02** = **0**
Fans on, with ON/OFF continuos regulation and with temperature/pressure transducer control, only when the compressor is on (at least one relay is configured as fan control). When the compressor turns off also the fans are forced off.
Par. **FA01** = **3** + Par. **FA02** = **1**
Fans on, with ON/OFF continuos regulation and with temperature/pressure transducer control, only when the compressor is on (at least one relay is configured as fan control). When the compressor turns off the fans are thermoregulated depending on the condensing temperature/pressure.
Par. **FA01** = **4** + Par. **FA02** = **0**
Fans on, with proportional regulation (PWM, 0..10V) and with temperature/pressure transducer control, only when the compressor is on. When the compressor turns off also the fans are forced off.
Par. **FA01** = **4** + Par. **FA02** = **2**
Fans on, with proportional regulation (PWM, 0..10V) and with temperature/pressure transducer control, only when the compressor is on. When the compressor turns off the fans are thermoregulated depending on the condensing temperature/pressure.

31.1 ON/OFF CONDENSER FAN

Par FA01 = 2 ON/OFF regulation

N° 1 circuit with 3 steps of ventilation

Step regulation

OUT relè	Step n° 1	Step n° 2	Step n° 3
Out relè step n° 1	**step** N° 1 **ON**	**step** N° 1 **OFF**	**step** N° 1 **OFF**
Out relè step n° 2	**step** N° 2 **OFF**	**step** N° 2 **ON**	**step** N° 2 **OFF**
Out relè step n° 3	**step** N° 3 **OFF**	**step** N° 3 **OFF**	**step** N° 3 **ON**

Par FA01 = 3 ON/OFF continuous step regulation

N° 1 circuit with 3 steps of ventilation

Continuous step regulation

OUT relè	Step n° 1	Step n° 2	Step n° 3
Out relè step n° 1	**step** N° 1 **ON**	**step** N° 1 **OFF**	**step** N° 1 **OFF**
Out relè step n° 2	**step** N° 2 **ON**	**step** N° 2 **ON**	**step** N° 2 **OFF**
Out relè step n° 3	**step** N° 3 **ON**	**step** N° 3 **ON**	**step** N° 3 **ON**

31.2 PROPORTIONAL FAN CONTROL (PWM OR 0..10V)

If FA01=4 (proportional control) the FA03 and FA04 (only for PWM output) parameters has to be configured to adapt the output signal to a characteristic of the load.
The fan start-up is always made at the maximum speed for the time set in FA03, then the speed follows the probe value.
The F04 delay, in micro – seconds, allows to adjust the output for each kind of the fan motor.
If FA01=3, when the compressor starts-up and the proportional regulation requires to turn off the fan (cut-off), if FA14≠0 the fan is forced at the minimum speed for the time set in FA14 itself. if FA14=0 the function is disabled.

31.3 CONDENSING UNIT: COMMON OR SEPARATE

The parameter **FA05** defines the condenser unit
FA05=0= Common condenser unit.
FA05=1= Separate condenser units.
If Pa FA05= 0 the outputs, configured as condensing fan control, will follow the same regulation algorithm.
The regulation includes:

- **CHILLER mode:** the fan works on the maximum probe value of the two circuits
- **HEAT PUMP (no evaporator probe configured):** the fan works on the minimum probe value (condenser temperature/pressure) of the two circuits
- **HEAT PUMP (evaporator probe configured):** the fan works on the minimum probe value (evaporator temperature/pressure) of the two circuits

If par. FA05 = 1 and if the evaporating pressure probe are not configured, the fan output controls are separated and are controlled by the condenser temperature/pressure probes. When the evaporator probes are configured, in heat pump the ventilation is controlled by these transducers.

31.4 GRAPH: PROPORTIONAL REGULATION OF CONDENSER FANS

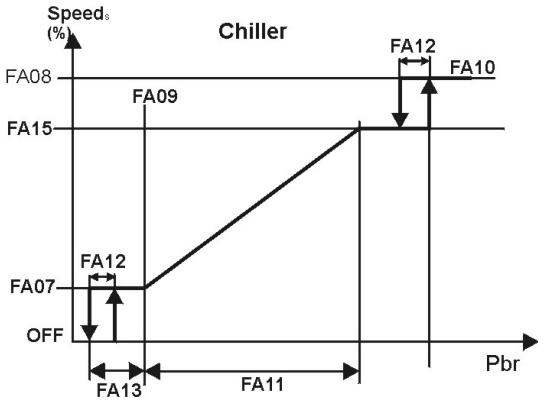

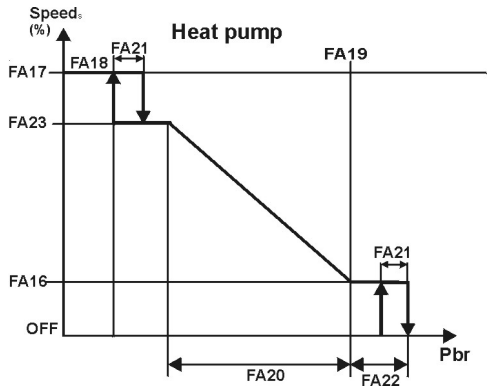

31.5 GRAPH: ON / OFF REGULATION OF THE CONDENSER FAN IN CHILLER MODE

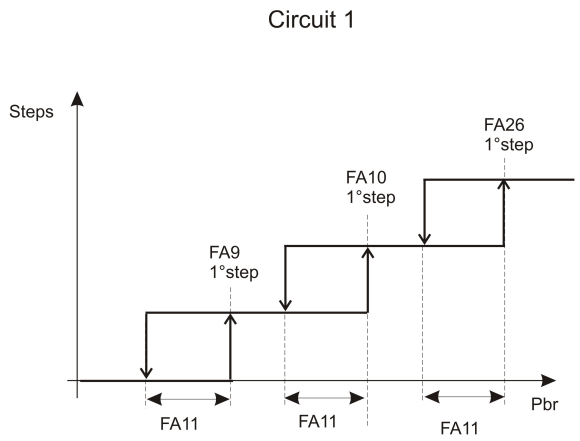

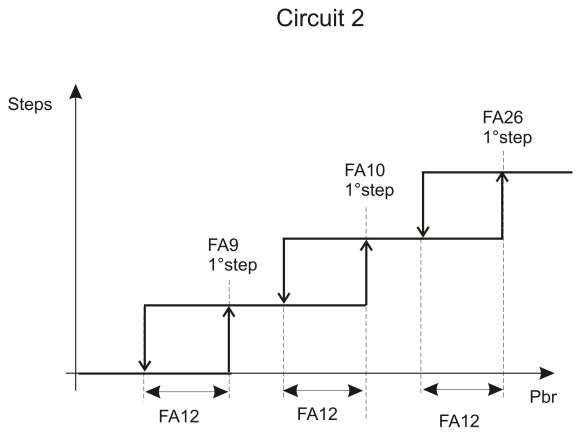

31.6 GRAPH: ON / OFF REGULATION OF THE CONDENSER FAN IN HEAT PUMP MODE

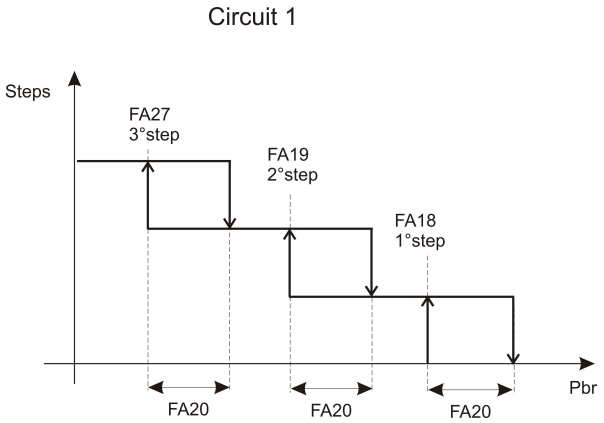

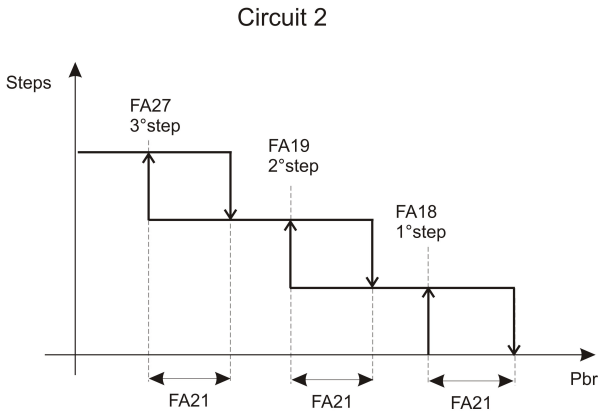

32 THERMOREGULATION OF THE ANTI FREEZE, INTEGRATION HEATING OR BOILER

32.1 THERMOREGULATION OF THE HEATERS IN CHILLER

The **Par. Ar06** selects the probe/s control for the anti-freeze relay outputs configured as anti-freeze / support / boiler heaters for the circuits 1 and 2 in chiller mode.
Par. **Ar06 = 0**: the function is disabled
Par. **Ar06 = 1**: the thermoregulation, the relay outputs for heaters circuit 1 and 2 (or both together) is controlled only throughout the NTC probe configured as evaporator water inlet.
Par. **Ar06 = 2**: the thermoregulation, the anti-freeze alarm and the relay outputs for heaters circuit 1 is controlled with NTC probe configured as evaporator probe outlet of the circuit 1.
The thermoregulation, the relay outputs for heaters circuit 2 is controlled with NTC probe configured as evaporator probe outlet of the circuit #2.
ATTENTION: It is not possible to control the heaters of the crcuit 1 with the probe of the circuit 2 and viceversa.
Par. **Ar06 = 3**: the thermoregulation, the relay outputs for heaters circuit 1 and 2 (or both together) is controlled throughout the NTC probe configured as evaporator water outlet circuit 1 or circuit 2 or evaporator water common outlet, or if they are all configured, by the first probe that goes below the setpoint.

32.2 THERMOREGULATION OF THE HEATERS IN HEAT PUMP

The **Par. Ar07** selects the probe/s control for the anti-freeze relay outputs configured as anti-freeze / support / boiler heaters for the circuits 1 and 2 in heat pump mode.
Par. **Ar07 = 0:** the function is disabled
Par. **Ar07 = 1:** the thermoregulation, the relay outputs for heaters circuit 1 and 2 (or both together) is controlled only throughout the NTC probe configured as evaporator water inlet.
Par. **Ar07 = 2**: the thermoregulation, the relay outputs for heaters circuit 1 is controlled with NTC probe configured as evaporator probe outlet of the circuit 1.
The thermoregulation, the relay outputs for heaters circuit 2 is controlled with NTC probe configured as evaporator probe outlet of the circuit 2.
ATTENTION: It is not possible to control the heaters of the crcuit #1 with the probe of the circuit 2 and viceversa.
Par. **Ar07 = 3:** the thermoregulation, the relay outputs for heaters circuit 1 and 2 is controlled throughout the NTC probes configured as evaporator water outlet circuit 1, circuit 2 and evaporator water common outlet , or if they are all configured, by the first probe that goes below the setpoint.

ATTENTION
The two outputs are controlled in parallel if configured with only by one NTC probe control for common evaporator outlet.

FUNCTIONNING OF THE ANTI-FREEZE, INTEGRATION HEATING, BOILER HEATERS DURING THE DEFROST CYCLE
The Ar05 defines the support heaters:
Par. **Ar05 = 0:** The heaters are activated only by the thermoregulation algorithm.
Par. **Ar05 = 1:** The heaters are activated only by the thermoregulation algorithm and are always on during the defrost. They turn on when the 4-way valve change from heat-pump to chiller and turn off only after the dripping time and the compressors restart.

32.3 THERMOREGULATION OF THE SUPPORT HEATERS FOR AIR/AIR UNIT

The NTC control in chiller mode depends on the Ar06 parameter value while from the Ar07 value in heat pump mode. With one relay configured as heaters for circuit #1
With one output configured as heater of the circuit #1 the output is enabled both for chiller and heat pump request.
With two outputs configured as heater of the circuit #1 and two the outputs are enabled both for chiller and heat pump request.

FUNCTIONNING OF THE SUPPORT HEATERS DURING THE DEFROST CYCLE
The **Ar05** parameter defines the support heaters operating mode during the defrost.
Par. **Ar05 = 0:** the heaters are controlled only through the thermoregulation algorithm.
Par. **Ar05 = 1:** heaters are controlled only through the thermoregulation algorithm and are always on during the defrost cycle. They turn on when the 4-way valve change from heat-pump to chiller and turn off only after the dripping time and the compressors restart

ATTENTION
The support heaters are always off when:
- The supply fan is not configured
- The supply fan is off
- The unit is in stand-by or remote off
- The probe is faulty

32.4 CONDENSER ANTI-FREEZE HEATERS REGULATION

The regulation dependes on the configuration of the heater circuit 1 relay and heater circuit 2 relay and the corresponding NTC probes used to this control.
The parameter Ar08 is used to select the heaters probe control both for chiller and heat pump.
Par. **Ar08 = 0:**the heater regulation are disabled.
Par. **Ar08 = 1:** the regulation of both the heaters together of the circuit 1 and 2 is excecuted **only** through the condesner water inlet NTC probe.

Par. **Ar08 = 2:** the heater 1 regulation is executed through the condenser water outlet NTC probe of the circuit 1.
The heater 2 regulation is executed through the condenser water outlet NTC probe of the circuit 2.
ATTENTION
It is not possible to control the heaters of the circuit 1 with the NTC probe of the condenser water outlet of the circuit 2 and viceversa.
Par. **Ar08 = 3**
The regulation of both the heaters together of the circuit 1 and 2 is excecuted through the probes configured as condenser water outlet of the circuit 1 and 2 and the NTC of the common outlet.

ATTENTION
When the outputs are configured as heaters circuit 1 and 2 they are both controlled by the NTC probe of the common condenser outlet.

32.5 GRAPH OF THE ANTI-FREEZE- INTEGRATION HEATING - BOILER HEATER RELAYS

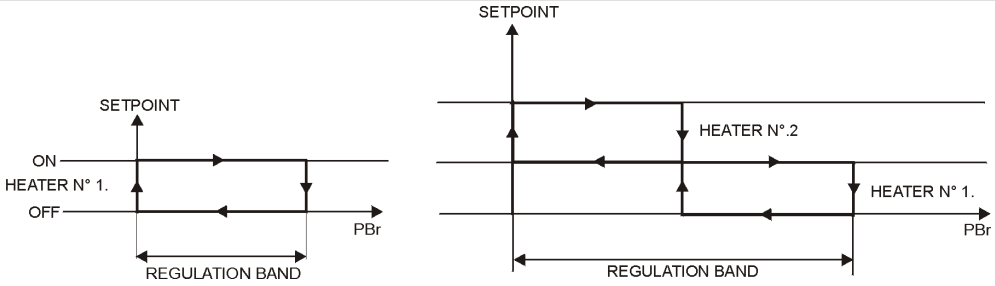

32.6 BOILER FUNCTION

The electrical heaters can be used as anti-freeze, as heating mode or to integrate the heat pump mode.
The function is enabled when:

- One NTC probe configured as external air for dynamic setpoint / boiler function.
- Parameter Ar11≠0.

Integration control Ar11=1
When the air temperature value detected by the external air probe decreases under the Ar12 setpoint, the Ar14 delay starts counting. If during the Ar14 counting the external air increases above the Ar12 + Ar13 (differential) the function is aborted and the Ar14 time is reloaded.
When the time Ar14 is expired and the external air temperature is still under the Ar12 setpoint, if the water temperature detected by the evaporator probe is lower than Ar15 in chiller mode or Ar17 in heat pump mode, the heaters are turned on. When the temperature rises over Ar15 + Ar16(differential) in chiller mode or Ar17+Ar18 in heat pump the heaters are turned off.
If the temperature of the external air rises above the Ar12 (set) + Ar13(differential) the heaters are turned off and the Ar14 delay is reloaded.
Attention
If boiler function is activated and external air temperature value lower than Ar12, when air temperature decreases under the Ar19 setpoint the compressors are turned off. They are restarted only if the external air temperature rises above Ar19+Ar20 (differential).

Heating control Ar11=2
If during the functioning the external air temperature value goes down under the Ar12 setpoint, the Ar14 delay time starts counting. If during this delay the external temperature rises above the Ar12+Ar13 the process is aborted and the time Ar14 reloaded.
If after the Ar14 delay the external air temperature is still under the Ar12 setpoint and the regulation water temperature detected by the evaporator probe is lower than Ar15 (chiller) or Ar17 (Heat Pump), the heaters are turned on while the compressor(s) and the condensing fan(s) are turned off. The heating is made only by the heaters.
When the temperature rises above the Ar15+Ar16 (regulation band in chiller) or Ar15 + Ar17(regulation band in Heat Pump) the heaters are turned off.
If during the functioning the external air temperature value rises above the Ar12 +Ar13, the heaters are turned off and the compressor thermoregulation is restarted, the Ar14 delay is reloaded.

HEATERS of the BOILER (ANTI-FREEZE) DURING the DEFROST CYCLE
The Ar05 parameter defines the functioning of the heaters of the boiler during the defrost. If Ar05=0 the heaters are activated by the thermoregulation; if Ar05=1 the heaters are turned on when the 4-way valve changes the status from heat pump to chiller and then they are turned off after the dripping time at the end of the defrost.

ATTENTION
The heaters of the boiler are always off when:

- Active flow alarm
- Active overload alarm of the configured water pump
- Active overload alarm of one of the two water pumps configured and any of the water pumps available for the water flow control.

(In this case the heaters are activated only by the anti-freeze setpoint to protect the evaporator)

33 DEFROST CYCLE

The defrost cycle starts only if all these steps are determined:
- Heat pump unit
- DF01≠0 (defrost enabled)
- The condenser/evaporator probe is configured (per circuit) (if the evaporator probe/s is/are defined, the defrost cycle is always controlled by it / them).

33.1 FORCED DEFROST

The function is enabled if the parameter dF19<>0. It allows to make a forced defrost cycle even if the dF09 timeout counting is not expired, when the condensing/evaporating temperature/pressure is lower than dF20 setpoint for the dF19 time counting.
If during the dF19 time counting the condensing/evaporating temperature/pressure rises above the value dF20+dF21 (set+differential) the function is disabled and the dF19 time is reloaded.

ATTENTION: the forced defrost is not related to the dF09 /dF06 delay times, therefore the forced defrost cycle, if condition are OK, is immediately executed.

33.2 COMBINED DEFROST

The function is enabled if one of the digital input is configured as NTC temperature for combined defrost of the 1st or 2nd circuit. This probe detects the external air temperature of the condenser (evaporator in heat pump) and determines the start and the stop of the defrost cycle.
Description of the functioning:
The count-down to the defrost cycle starts when the temperature/pressure of the probe, configured as condensing/evaporating circuit 1 or 2 probe, is lower than dF02 parameter.
After the dF09 counting the instruments checks the temperature probe value (configured as combined defrost circuit 1 or 2) and if it is lower than dF10 (temperature setpoint to start the defrost of the circuit1) or dF12 (temperature setpoint to start the defrost of the circuit2) the defrost cycle starts otherwise the unit still runs in heat pump mode.
When the temperature decreases under the dF10 or dF12 values the defrost immediately start.
The defrost ends when the NTC combined defrost probe 1 or 2 increases over dF11 (circuit1) or dF13(circuit2).
If the defrost is enabled the display allows to show the external temperature on the top display and the labels **dEF1** (circuit1) **or dEF2**(circuit2) on the bottom display aof the circuit read-out function.

33.3 MANUAL DEFROST

The manual defrost key function is enabled if the unit is on with at least one compressor running.
The defrost start temperature/pressure of the controlled probe must be lower than dF02 setpoint value while if the combined defrost is active the detected temperature must be lower than dF10 or dF12.
At this point by pushing **SET** + **UP** for more than **5** seconds the manual defrost starts.

ATTENTION: the manual defrost is not related to the dF09 /dF06 delay times, therefore the forced defrost cycle, if condition are OK, is immediately executed for both circuits.

33.4 DEFROST START CONDITION WITH TWO CIRCUIT UNIT

Parameter involved: dF22
0= Independent
1= Only if both circuit conditions are satisfied
2= At least one circuit condition is satisfied

33.5 START/STOP DEFROST IN A TWO CIRCUITS UNIT WITH ONE CONDENSING FAN CONTROL UNIT

The table below shows the possible configuration of the parameters dF22 and dF23.

Parameter	dF23=0	dF23=1	dF23=2
dF22=0	not possible (ACF1)	not possible (ACF1)	not possible (ACF1)
dF22=1	not possible (ACF1)	Yes	Yes
dF22=2	not possible (ACF1)	Yes	not possible (ACF1)

ATTENTION:
The configuration error ACF1 is displayed if the parameter value of dF22 and dF23 is not permitted.

33.6 START/STOP DEFROST IN A TWO CIRCUITS UNIT WITH TWO CONDENSING FAN CONTROL UNIT

The table below shows the possible configuration of the parameters dF22 and dF23.

Parameter	dF23=0	dF23=1	dF23=2

dF22=0	**Yes**	**not possible (ACF1)**	**not possible (ACF1)**
dF22=1	**Yes**	**Yes**	**Yes**
dF22=2	**not possible (ACF1)**	**Yes**	**not possible (ACF1)**

ATTENTION:
The configuration error ACF1 is displayed if the parameter value of dF22 and dF23 is not permitted.

33.7 AUTOMATIC DEFROST PROCEDURE

Phase 1: when the unit is working in heat pump mode and at least one compressor is running, if the condensing-evaporating temperature or pressure is lower than dF02 value the counting of the delay time dF09 (interval defrost of the same circuit) starts and the defrost led is blinking.
Functioning of the time counter:
1. **The dF09 counter is reloaded** if the power supply fails, after a defrost cycle and after the unit changes from chiller to heat pump.
2. **The dF09 counter is stopped** if the last compressor turns off or if the pressure-temperature of the condensing-evaporating probe becomes higher than dF02 parameter value.
3. **The counter is decreased** if the condensing or evaporating temperature-pressure probe value becomes lower than the dF02 parameter value.

Phase 2: this phase starts when the df09 time is elapsed
If one digital input si configured as "defrost end" of the circuit 1 or 2 and the contact is active, the unit waits until the contact is de-activated.

Probe configured as combined defrost NTC of circuit 1 or 2:
if the condensing or evaporating probe value of the 1st circuit is lower than dF10 and lower than dF12 for the 2nd circuit the process step on the 3rd phase, otherwise the unit waits until the probe values decrease under dF10 and dF12.
If any of the probe is not configured as combined defrost NTC, the process steps on the 3rd phase.
When the circuit condition are satisfied to execute the 3rd phase the display shows the dEF1 (circuit1) and dEF2 (circuit2) labels.

FASE 3: inversion valve management (parameter **dF07**=compressor deactivation time before the defrost)
dF07=0: the valve is activated without stopping any compressor and the defrost cycle is immediately activated. If the thermoregulation or the dF14 parameter require more compressors, the dF16 (on compressor delay during defrost cycle) is loaded.
If df07 <> 0 the compressors and the steps are turned off (the compressor/s led is blinking, the defrost icon is on); the steps are described below:
1. all compressors are switched off
2. after dF07/2 delay the valve is activated;
3. after dF07/2 delay the compressors are activated.

If the thermoregulation or the dF14 parameters require to turn ON more than one compressor for circuit, the delay on time between the compressors depends on the parameter dF16.
If the partialization/s are configured always OFF during the defrost cycle, the compressor is always 100%.
- if dF14=1 (all the circuit n°1 resources are forced to ON): during the defrost cycle the compressors and steps of the circuit n°1 are ON while, if dF14=0 , compressors and steps are thermoregulated.
- if dF15=1 (all the circuit n°2 resources are forced to ON): during the defrost cycle the compressors and steps of the circuit n°2 are ON while, if dF15=0 , compressors and steps are thermoregulated.

4th PHASE: Fan management during defrost
Parameter involved: **dF17** (condensing fan management)
- If dF17=0: the condensing fan are always off;
- If dF17=1: the condensing fans start if the condensing temperature-pressure value is higher than dF18, they will following the normal chiller thermoregulation algorithm.

ATTENTION during the defrost cycle, both for chiller and the heat pump modes, the fan are controlled with the condensing probe even if the evaporator probe is present and configured.
The 4th phase lasts at least for the dF04 time counting and can terminate for these conditions:

1. If dF01=1:
   - The combined NTC probe value is higher than dF11 of the 1st circuit;
   - The combined NTC probe value is higher than dF13 of the 2nd circuit;
   - When the condensing-temperature probe/s is/are higher than dF03 parameter value.
2. If dF01=2: the dF05 counting, maximum defrost timeout, is expired, step on **5th PHASE**;
3. If dF01=3, if the end defrost digital input is deactivated, step on **5th PHASE**.

5th PHASE: Inversion valve management (par. **dF08**= compressor deactivation time after the defrost)
If dF08 = 0 the valve is turned without stopping the compressors, the defrost ends and all the regulation restarts, the defrost led in heat pump is off).
If dF08 <> 0:
1. All the compressors and steps are turned off (the compressor leds are blinking and the defrost led is on)
2. after dF08 / 2 the inversion valve de-activated
3. After dF08 / 2 all the regulation restarts and the defrost led in heat pump is off).

33.8 OTHER INFORMATION ABOUT THE DEFROST

If the unit is configured with one condenser see parameter FA05:
0= common condenser;
1= separated condensers.
For FA05=0, common condenser, the defrost of the two circuits starts at the same time.
ATTENTION
Before starting the 3rd phase, the dF06 counting (time delay between two circuits defrost) must be expired.
ATTENTION
When the parameter dF01=1 (defrost managed by temperature/pressure), if the defrost ends for maximum defrost time or with the end defrost contact, the bottom display will show, alternated with the normal measurement value, the label **b1dF** (circuit n°1) or **b2dF** (circuit n°2) labels to indicate the defrost end alarms.

33.9 DEFROST BY CONDENSER FAN

DEFROST BY CONDENSER FANS

If dF01 = 4 defrost is activated throug condenser fans.
If the temperature detected by the probe configured as external air temperature is > dF25 parameter, the compressor is stopped and the condenser fan is activated. The defrost ends:

- if the combined defrost is active: for temperature or max time
- if only NTC probes are configured: for temperature or maximum time
- if only pressure probes are configured: for maximum time

ATTENTION:
also if the defrost through condenser fan is activated, if the external temperature is < dF25, the defrost is through hot gas (compressor ON).

If dF17 = 2 during dripping time (dF08 if different from 0) the ventilation is forced for the time set on dF08 only if the temperature detected by the probe configured as external temperature is > dF25 parameter.
ATTENTION:
With defrost with only ventilation enabled the forced defrost is always with hot gas.

33.10 END DEFROST BY LOW WATER OUTLET EVAPORATOR TEMPERATURE

To enable the function is necessary configure a probe by parameter dF27:
dF27=0 Function disabled
dF27=1 PB1 probe
..
dF27=6 PB6 probe

During the defrost when the temperature detected by the probe is lower than dF28 set point the defrost is aborted.
The defrost doesn'start if the temperature detected by the probe is lower than dF28.

The function is disabled if:
- dF27=0
- forced defrost enabled (in this case the parameter dF27 is not considered)

33.11 DEFROST PARAMETER DESCRIPTION

ATTENTION IT IS NOT POSSIBLE TO DO MODIFY THE DEFROST PARAMETERS WHEN THE DEROST CYCLE IS RUNNING.
dF01 Defrost mode
0 = Defrost not enabled;
1 = Temperature/pressure defrost. The dF09, time delay to the defrost, starts when the temperature decreases under the dF02 setpoint. The Defrost cycle end is determined by temperature/pressure.
2 = Time duration defrost. The dF09, time delay to the defrost, starts when the temperature decreases under the dF02 setpoint. (see start probe par. dF24). The Defrost cycle end is determined by the maximum duration dF05.
3 = Defrost from digital input. The dF09, time delay to the defrost, starts when the temperature decreases under the dF02 setpoint. (see start probe par. dF24) The Defrost cycle end is determined by the active digital input.
4 = Defrost with condeser fan
dF02 Temperature / pressure to begin the time counting to next defrost.
It allows to program a setpoint under which the dF09 starts counting.
dF03 Temperature / pressure to end the defrost.
It allows to program a temperature/pressure setpoint value to determines the end of the defrost when the probe value is rising.
dF04 Minimum duration of the defrost
It determines the minimum defrost time duration after starting the defrost itself even if the conditions are not more satisfied.
dF05 Maximum duration of the defrost
If dF01=2, it determines the maximum duration of the defrost and even if, for the other cases, the end defrost condition are still to be satisfied.

dF06 defrost delay time between the 1st and the 2nd circuit.
After the interval dF09 determined by the defrost request of one of the circuits the other 2nd circuits must wait also the time dF06 before defrosting.
dF07 Compressor off time before the defrost (the led of the compressor is blinking)
After the dF09 delay and before activating the defrost, the compressors are stopped for the dF07 time.
Exactly in the middle of the dF07 time the 4-way valve is activated to equalise the pressure of the unit and when dF07 is completely expired the compressors and the defrost can start.
This procedure does not respect the compressor on delay protection therefore the compressor is immediately turned off and then on. If dF07 = 0 the compressor is not stopped and the 4-way valve is immediately turned.
dF08 Compressor off time after the defrost (the led of the compressor is blinking)
After the defrost cycle the compressors are stopped for the dF08 time.
Exactly in the middle of the dF07 time the 4-way valve is activated to equalise the pressure of the unit and to drain the external exchange unit, when dF08 is completely expired the unit restart in heat pump mode.
This procedure does not respect the compressor on delay protection therefore the compressor is immediately turned off and then on. If dF08 = 0 the compressor is not stopped and the 4-way valve is immediately turned.
DF09 Delay time to next defrost of the same circuit
It starts when the condensing/evaporating temperature/pressure probe value is lower than dF02 setpoint. This time is reloaded if the power supply fails, after a defrost cycle or from a digital input request of defrost.
The time counting is interrupted if the compressor is turned off or if the temperature/pressure is higher then dF02.
dF10 Temperature setpoint to start a combined defrost of the circuit #1.
It allows to set a temperature value to determines the beginning of a combined defrost.
After the dF09 counting the NTC probe of the combined defrost of the circuit #1 is compared to the dF10 setpoint, if the value is lower the defrost starts otherwise the unit runs in heat pump mode and when the temperature decreases under dF10 the defrost immediately starts.
dF11 Temperature setpoint to end a combined defrost of the circuit #1.
It allows to set a temperature value to determine the end of a combined defrost.
When the NTC probe of the combined defrost of the circuit #1 becomes higher than dF10 setpoint the defrost cycle stops.
dF12 Temperature setpoint to start a combined defrost of the circuit #2.
It allows to set a temperature value to determine the beginning of a combined defrost.
After the dF09 counting the NTC probe of the combined defrost of the circuit #2 is compared to the dF12 setpoint, if the value is lower the defrost starts otherwise the unit runs in heat pump mode and when the temperature decreases under dF12 the defrost immediately starts.
dF13 Temperature setpoint to end a combined defrost of the circuit #2.
It allows to set a temperature value to determine the end of a combined defrost.
When the NTC probe of the combined defrost of the circuit #2 becomes higher than dF13 setpoint the defrost cycle stops.
dF14 All the resources on during the defrost of the circuit #1
0= Not enabled
1= Enabled
dF15 All the resources on during the defrost of the circuit #2
0= Not enabled
1= Enabled
dF16 Compressor step delay time in defrost (compressors of the same circuit).
dF17 Condensing fan control during defrost and dripping cycle
0= Not enabled
1 = Enabled in defrost
2= Enabled in defrost and in dripping time
If dF17 = 0: During the defrost the fan control is not active.
If dF17 = 1: when the condensing temperature/pressure value increases over dF18 the fans are turned on. the fan control is determined by the same algorithm used in chiller mode.
If dF17 = 2: during the dripping time (dF08 <>0) the fan are turned on for the time duration set in dF08 .
dF18 Pressure / temperature setpoint to force the fans on during the defrost
When the temperature/pressure rises over this value the fan are turned on at the maximum speed.
dF19 Time delay before starting a forced defrost
It determines a delay time before starting the defrost cycle
dF20 Temperature / pressure setpoint to force a defrost
It determines a temperature/pressure setpoint under which the dF19 starts counting, when dF19 is expired if the temperature/pressure is still lower than dF20 the defrost is immediately executed.
ATTENTION If during the dF19 counting the temperature rises over df20+dF21(differential) the process is aborted and the dF19 time reloaded.
dF21 Forced defrost differential
dF22 defrost mode for unit with two circuits
Operative mode:
0= Independent
1= The condition are satisfied in both circuits
2= At least one circuit has reached the start condition
dF23 It determines the end of the defrost for unit having two circuit and common condensing ventilation
Operative mode:
0= Independent
1= The end defrost condition are satisfied In both circuits
2= At least one circuit has reached the end defrost condition
dF24 Start / stop defrost probe
Start / stop defrost from analog input
0= start and stop with condenser temperatur / pressure probe
1= start with evaporator pressure probe / stop with condenser temperatur / pressure probe
2= start with condenser temperatur / pressure probe / stop with evaporator pressure probe
3= start and stop with evaporator pressure probe
dF25 Set point to enable defrost with condenser fan

dF26 Stop supply fan during defrost cycle
0= Not enabled
1= Enabled
dF26 Probe selection for minimum temperature outlet during defrost
This parameter allows to select which probe controls the outlet temperature to force the exit of the defrost
dF27 Set point for minimum temperature outlet during defrost

34 ENERGY SAVING

34.1 ENERGY SAVING: DIGITAL INPUT ACTIVATION

The energy saving is activated when one of the digital input configured as energy saving is ACTIVE.
The energy saving activation is signalled by icon Vset lighted. When working in Chiller or Heat Pump the first pressure on SET key shows the actual setpoint SetC (chiller) or SetH (HP) labels while the top display shows the set value.
If the energy saving is active the next pressure on the SET key shows the label **"SEtr"** (real setpoint), and the top display shows the real set value active in that moment.
During the Energy Saving cycle the setpoint is incremented with these parameter values ES14 / ES16: SET + ES14 for Chiller mode and SET + ES16 for HP mode.
The differential values, during the energy saving thermoregulation, are defined with parameter ES15 for chiller mode and ES17 and Heat Pump mode.

34.2 ENERGY SAVING TIME TABLE WITH RTC

The Energy Saving function with a daily RTC time table is available only if the RTC circuit (optional) is on board.
This function allows to set three start and stop energy saving daily periods (ES1..ES2, ES3..ES4, ES5..ES6).
The energy saving activation is signalled by icon Vset. When working in Chiller or Heat Pump the first pressure on SET key shows the actual setpoint **SetC** (chiller) or **SetH** (Heat Pump) labels while the top display shows the set value.
If the energy saving is active the next pressure on the SET key shows the label **"SEtr"** (real setpoint), and the top display shows the real set value active in that moment.
During the Energy Saving cycle the setpoint is incremented with these parameter values ES14 / ES16: SET + ES14 for Chiller mode and SET + ES16 for Heat Pump mode.
The differential values, during the energy saving thermoregulation, are defined with parameter ES15 for chiller mode and ES17 and Heat Pump mode.

The function can work if the following requirements are satisfied:
1. RTC circuit mounted.
2. Parameters ES01…ES06 are not equal to 0 and are not programmed with the same value.

34.3 RTC DAILY TIME TABLE PROGRAMMING

This function can be also used to turn ON or OFF the unit.
Enter parameter programming:
1. Select with **UP** or **DOWN** keys the ES parameter family.
2. Within the ES parameters select with UP or DOWN keys the parameters ES01…ES06 to determine the start and stop of the energy saving daily periods.

Example
Set the energy saving start with ES01 and the energy saving stop time ES02 of the first period:
If **ES01 = 8.0 ES02 = 10.0** the energy saving setpoint is active from 8 to 10.
If **ES01 = 23.0 ES02 = 8.0** the energy saving setpoint is active from 23 (11pm) to 8 (8 am) in the morning of the next day.
If necessary repeat the operation for the others two time periods defined by ES03…ES04 and ES05…ES06.

34.4 ENERGY SAVING OR UNIT ON/OFF ACTIVATION WITH RTC PROGRAMMING

Enter the parameter programming:
1. Select with **UP** or **DOWN** keys the ES parameter family.
2. Within the ES parameters select with UP or DOWN keys the parameters ES07 (Monday)…ES13 (Sunday) to determine which days to include.

Configuration table Energy saving or unit ON/OFF activation with rtc programming

Par. ES07 – ES13	0= RTC not enabled 1= 1st period enabled 2= 2nd period enabled 3= 1st and 2nd periods enabled 4= 3rd period enabled 5= 1st and 3rd periods enabled 6= 2nd and 3rd periods enabled 7= 1st, 2nd and 3rd periods enabled
Energy saving or unit ON/OFF with RTC and **X Y**	where: **X** with range 0..7 represents the energy saving where: **Y** with range 0..7 represents the unit on/off

Example of a daily programming:
Monday
Enater parameter programming
1. In the ES parameter family, select the parameter ES07, the top display shows 0 - 0
2. Push SET key: the top display shows 0 - 0 blinking, with UP or DOWN keys select the corresponding function (see next table) :
3. Push SET to confirm.
4. Push SET + UP to exit the programming or wait the programming timeout.

MONDAY X = 0 - Y= 0: The energy saving and the unit on/off are both disabled:

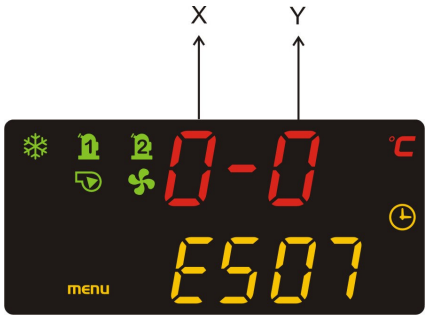

MONDAY X = 0 - Y= 1 energy saving is disabled, and unit on/off will follow the first RTC period ES1..ES2.

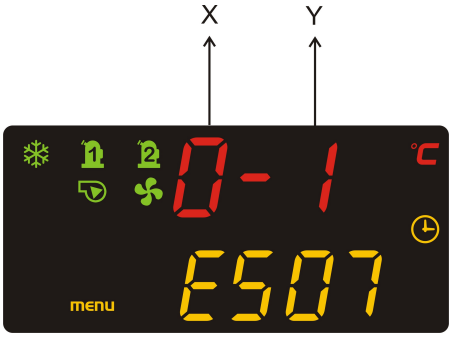

MONDAY X = 3 - Y= 7: energy saving enabled during the 1st and 2nd RTC periods, unit on/off enabled during the 1st, 2nd 3rd periods.

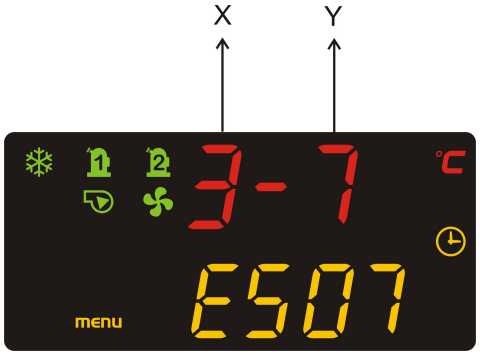

WEEKLY PROGRAMMING

Repeat the daily programming for the other days of the week using parameters ES08..ES13.

34.5 UNIT ON/OFF ACTIVATION WITH RTC PROGRAMMING AND DIGITAL INPUT

If this “Digital input selection functioning with RTC or keyboard” is configured and inactive enables operation through the internal clock, the unit is running only inside the time band.
If the unit is in OFF by RTC and Par. ES18 ≠ 0 if the unit will be to start by keyboard the unit should be wort still for the time to set up in ES18.

35 DYNAMIC SETPOINT

The dynamic setpoint allows to increase or decrease the setpoint with a proportional value determined by Sd01 (chiller) and Sd02 (Heat pump) that depends from the 4..20mA analogue input or from the external air temperature probe. This function allows to save energy or run the unit when the external ambient is not within the normal operative conditions.

The dynamic setpoint activation is signalled by the SET key led on. When working in Chiller or Heat Pump the first pressure on SET key shows the actual setpoint **SetC** (chiller) or **SetH** (Heat Pump) labels while the top display shows the set value.
If the energy saving is active the next pressure on the SET key shows the label **"SEtr"** (real setpoint), and the top display shows the real set value active in that moment.
The regulation is enabled if:

- In chiller mode the parameter Sd01 is not equal to 0.
- In heat pump mode the parameter Sd02 is not equal to 0.
- a 4÷20mA analogue input is configured as dynamic setpoint control or a NTC analogue input is configured as external air temperature for dynamic setpoint control.

With UP or DOWN keys within the circuit measurement read-out is possible to show the external air temperature indicated by the Et label.

35.1 DYNAMIC SETPOINT GRAPH

4÷20ma probe configured as dynamic setpoint analogue input:

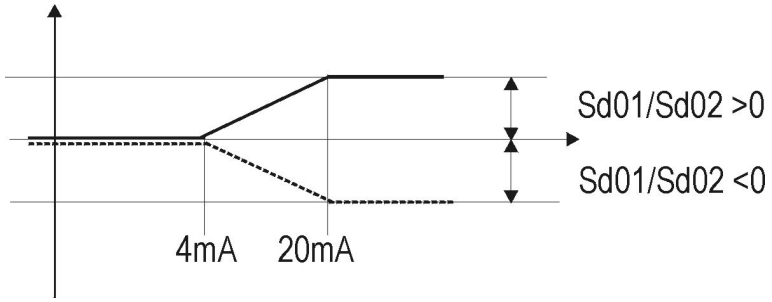

NTC probe with positive differential:

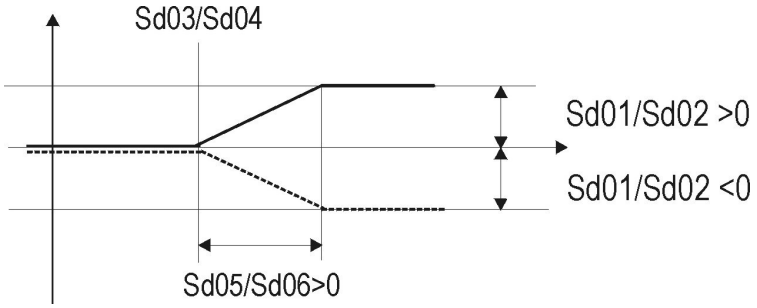

NTC probe with negative differential:

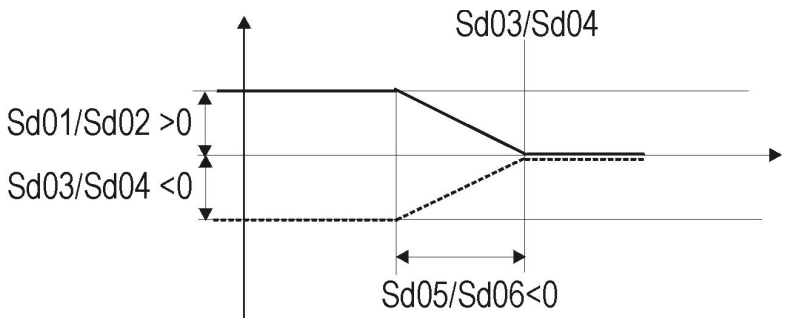

36 GEOTHERMAL FUNCTION

The function manages an ON/OFF valve (relay) or modulated valve (signal 0..10V) to use, for example, a ground water as cooling integration.
Configuration:

- the function has to be activated by parameter US21
- two probes have to be configured by parameters US25 and US26
- one relay has to be configured as “valve for geothermal function”

Regulation probes:

- if the geothermal function is configured with parameter US27=0 (analog input 1 – analog input 2), the regulation uses the analog input 1
- if the geothermal function is configured with parameter US27=1 (analog input 2 – analog input 1), the regulation uses the analog input 2

Function activation:

- **if US27=0: (**analog input 1 – analog input 2) > US22 for a minimum time US24
- **if US27=1: (**analog input 2 – analog input 1) > US22 for a minimum time US24

Function deactivation:

- **if US27=0: (**analog input 1 – analog input 2) < US22 –US23 for a minimum time US24
- **if US27=1: (**analog input 2 – analog input 1) < US22 –US23 for a minimum time US24

Relay: geothermal function configured on direct action

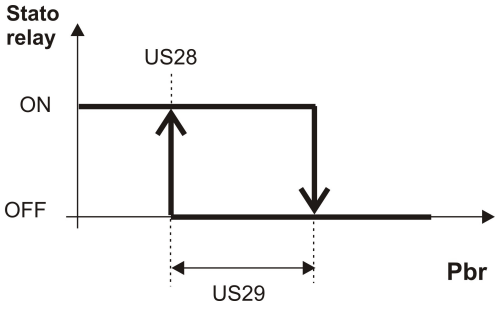

Relay: geothermal function configured on reverse action

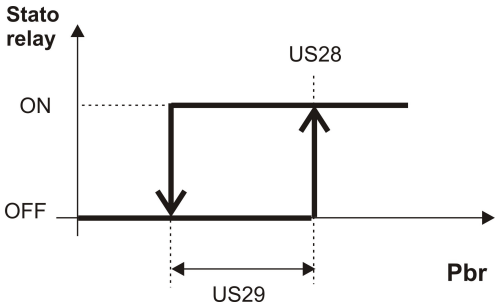

Analog output 0..10V: geothermal function configured on reverse action

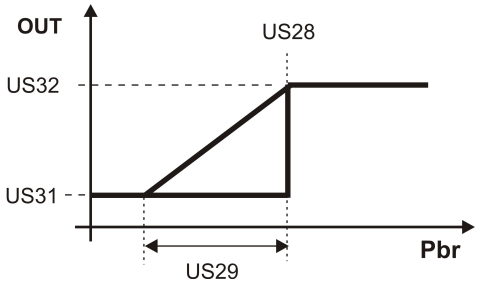

Analog output 0..10V: geothermal function configured on direct action

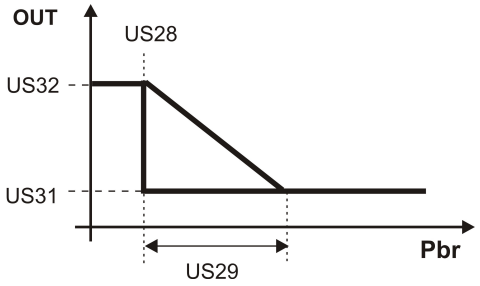

37 AUXILIARY FUNCTION

37.1 AUXILIARY FUNCTION ON RELAY OUTPUT

The auxiliary relays can be configured to manage two independent, from heat pump or chiller mode, output controls.
Each output can be managed with a dedicated temperature or pressure probe input (NTC probe, 4..20mA or 0..5V transducers) or with the common available temperature or pressure configurable inputs.
The probe selection is made with parameters uS02 for the circuit 1 and uS06 for the circuit 2.
The function is enabled when the parameter uS01 <>0 for the circuit 1 and the parameter uS05<>0 for the circuit 2 and at least one output is configured as auxiliary output.
Par. **uS01** configuration auxiliary relay 1
Par. **uS05** configuration auxiliary relay 2
Value and function
0 = Not enabled
1 = Function enabled, direct action, also during stand-by or remote off
2 = Function enabled, direct action, only with unit running
3 = Function enabled, inverse action, also during stand-by or remote off
4 = Function enabled, inverse action, only with unit running

37.1.1 Auxiliary relay on Direct action

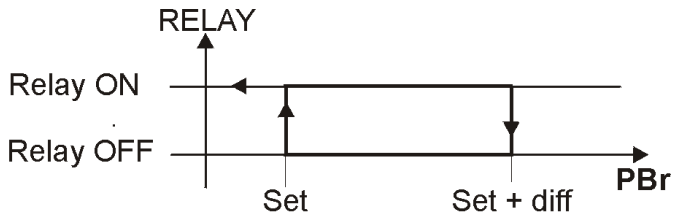

PBr = NTC probe or transducer selected by the parameters uS02 / uS06

37.1.2 Auxiliary relay on reverse action

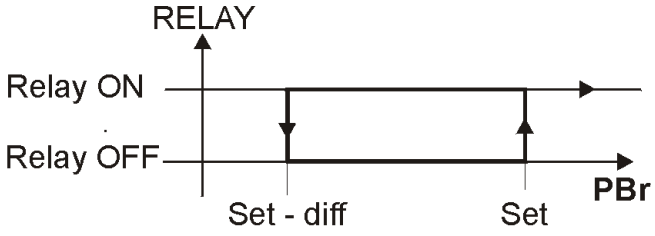

PBr = NTC probe or transducer selected by the parameters uS02 / uS06

37.2 AUXILIARY FUNCTION ON ANALOG OUTPUTS

The analog outputs OUT1…OUT4 can be configured as auxiliary output.
The function is enabeld if:

- AUX1: parameter uS09≠0 and an analog input configured as "Temperature probe **NTC** for auxiliary output #1"
- AUX2: parameter uS15≠0 and an analog input configured as "Temperature probe **NTC** for auxiliary output #2"

uS09 and **uS15:**
0 = Function disabled
1 = Function alwais enabled on direct action (also if the unit is in STD-BY or remote OFF)
2= Function enabled on direct action only if the unit is ON
3 = Function alwais enabled on reverse action (also if the unit is in STD-BY or remote OFF)
4= Function enabled on reverse action only if the unit is ON

Reverse action:

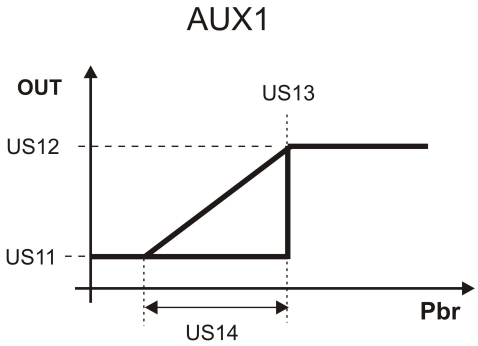

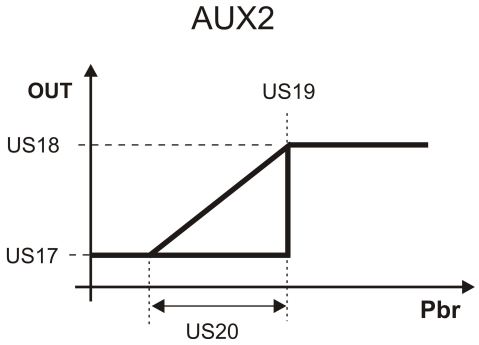

Direct action:

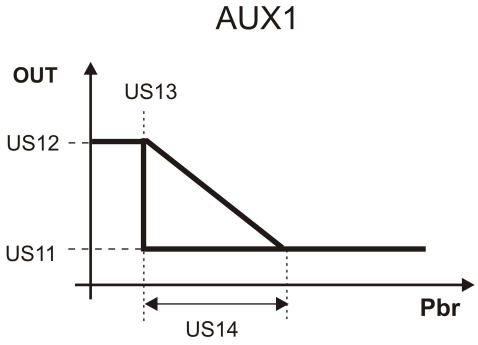

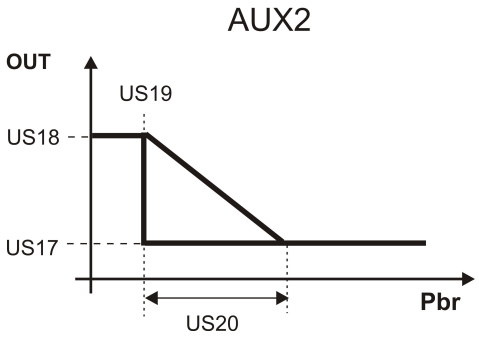

38 LOAD MAINTENANCE

PARAMETERS CO24..CO29 are the set of the running hour counters of the loads (compressors and water pumps).
They establish, for each load, the number of running hours limit to display a maintenance message.
If one of these parameters is equal to 0 the maintenance signalling is disabled but the running hours counter remains active.

38.1 LOAD MAINTENANCE RESQUESTS

Label description	C1Mn (maintenance comp. 1), C2Mn (maintenance comp. 2) AEP1 (maintenance evaporator water pump n° 1) AEP2 (maintenance evaporator water pump n° 2) ACP1 (maintenance condenser water pump n° 1) ACP1 (maintenance condenser water pump n° 2)
Activation	Compressor/pump running hours > counter setpoint for that load
Reset	Running hour reset (Hour label in Menu function)
Restart	Manual
Icon	⚠ blinking
Actions	Alarm relay and buzzer activated
REGULATIONS	
Actions	Only signalling
Loads	Not modified

39 MESSAGES - ALARM CODES

the alarm codes are defined by letters and numbers:.
Alarm typology:

- **A** = alarm of the unit
- **b** = alarm of the circuit
- **C** = alarm of the compressor

39.1 AP1 - AP2 - AP3 - AP4 - AP5 - AP6 - AP7 - AP8 PROBE FAILURE

Label on the display	**AP1** = PB1 probe alarm…**AP6** = PB6 regulator probe alarm **AP7** keyboard N° 1 probe alarm **AP8** keyboard N° 2 probe alarm
Reason	Probe configured but the read-out is not in the range
Reset	Probe not configured or probe in the right range
Restart	Automatic
Icon	blinking ⚠
Action	Alarm Relay + and buzzer on

39.2 AEFL: EVAPORATOR FLOW ALARM (DIFFERENTIAL PRESSURE SWITCH)

Label on the display	**AEFL** evaporator flow alarm
Origin	Digital input active for the time set in AL22. The alarm is not detected for AL20 time starting from water pump activation
Reset	Digital input not active for AL23 time
Restart	Automatic if the digital input is active for less time than AL21 (AL21 starts when AL22 time is expired) Manual if the digital input is active for more time than AL21 (Reset procedure in Menu function).
Icon	Blinking **Flow!**
Action	Alarm Relay + and buzzer on only during normal running conditions.

39.3 ACFL: CONDENSER FLOW ALARM (DIFFERENTIAL PRESSURE SWITCH)

Label on the display	**ACFL** condenser flow alarm
Origin	Digital input active for the time set in AL18. The alarm is not detected for AL16 time starting from water pump activation
Reset	Digital input not active for the time AL19.
Restart	Automatic if the digital input is active for less time than AL17 (AL17 starts when AL18 time is expired) Manual if the digital input is active for more time than AL17 (Reset procedure in Menu function).
Icon	Blinking **Flow!**
Action	Alarm Relay + and buzzer on only during normal running conditions.

ATTENTION
The alarm relay and the buzzer are activated only if the alarm appears during normal running conditions.

NOTE ABOUT THE FLOW ALARM

CO15 / **CO20=0** Water pump not enabled.
The alarm is managed only if one digital input is configured as flow switch, **the restart is always automatic.**
CO15 / **CO20=1/3/4/6** Water pump with continuous control.
The alarm is managed only if one digital input is configured as flow switch, **the restart is always automatic in stand–by or remote OFF (pump off);** it becomes **manual** after AL17/AL21 time.
In chiller or heat pump only. During the functioning of the unit any flow alarm stop the loads described in the table, the water pump follow its regulation algorithm and is turned off after AL17/AL21 time.
CO15 / **CO20=2/5** Compressor on – pump on
The alarm is managed only if one digital input is configured as flow switch, **the restart is always automatic in stand–by or remote OFF (pump off);** it becomes **manual** after AL17/AL21 time.
During the functioning of the unit any flow alarm stop the loads described in the table, the water pump follow its regulation algorithm and is turned off, after AL17/AL21 time it is completely locked.
MANUAL RESTART OF THE FLOW ALARM
After AL17/AL21 time it is necessary to enter the function Menu to reset the alarm itself. The alarm message **DOES NOT DISAPPEAR** if the alarm condition is still on.
AL16/**AL20** Alarm flow delay after on pump.
When the water pump starts, the alarm is not detected for AL16/AL20 time.

AL17/**AL21** Maximum time flow switch alarm active befor to block the water pump
It determines maximum time of flow alarm active before to block the water pump.
ATTENTION
With air/water or water/water units (CF01=1,2) the minimum number of events per hour is 1.

39.4 ATSF: OVERLOAD ALARM OF THE SUPPLY FAN

Label on the display	**AtSF:** Overload alarm of the supply fan
Origin	CF01=0 (air/air unit): Digital input active for the time set in AL22. The alarm is not detected for AL20 time starting from supply fan activation
Reset	Digital input not active for AL23 time
Restart	Automatic if the digital input is active for less time than AL21 Manual if the digital input is active for more time than AL21 (Reset procedure in Menu function).
Icon	Blinking **Flow!**
Action	Alarm relay + buzzer ON

MANUAL RESET OF THE OVERLOAD ALARM OF THE SUPPLY FAN
If the digital input is active for more than AL21 seconds, it is necessary to restart manually the unit (reset procedure in Function Menu with blinking label **rSt)**. Push SET key to reset the alarm; the label disappears, the fan restarts and the alarm is by-passed for AL20 time delay to allow the start-up if within this interval the alarm does not appear again.

39.5 ATE1 - ATE2 EVAPORATOR PUMP OVERLOAD ALARM

Label on the display	**AtE1** (overload pump alarm of evaporator 1) **AtE2** (overload pump alarm of support evaporator 2)
Origin	Active ID when it is configured as overload pump of evaporator 1 Active ID when it is configured as overload pump of support evaporator 2.
Reset	Digital input not active
Restart	Manual (reset procedure in function menu).
Icona	Blinking ⚠
Action	Alarm relay + buzzer ON

39.6 ATC1 - ATC2 CONDENSER PUMP OVERLOAD ALARM

Label on the display	**AtC1** (overload pump alarm of condenser 1) **AtC2** (overload pump alarm of support condenser 2)
Origin	Active ID when it is configured as overload pump of condenser 1 Active ID when it is configured as overload pump of condenser 2.
Reset	Digital input not active
Restart	Manual (reset procedure in function menu).
Icon	Blinking ⚠
Action	Alarm relay + buzzer ON

39.7 AEE EEPROM ALARM

Label on the display	**AEE**
Origin	Wrong eeprom data
Reset	-------
Restart	Manual
Icon	Blinking ⚠
Action	Alarm relay + buzzer ON

39.8 AFR: POWER SUPPLY FREQUENCY ALARM

Label on the display	**AFr** (Line frequency alarm)
Origin	The power supply frequency is not equal to the Par. CF54 ± tolerance
Reset	Ferquency control parameter adjusted, frequency within the tolerance
Restart	Automatic
Icon	Blinking ⚠
Action	Alarm relay + buzzer ON

The alarm is disabled if CF54=0

39.9 ALC1: GENERIC ALARM WITH STOP REGULATION

Label on the display	**ALC1:** generic alarm from digital input with stop regulation
Origin	Digital input configured as generic alarm active; the alarm is detected with a delay configured by AL53 parameter
Reset	Digital input configured as generic alarm not active for AL54 time
Restart	Automatic – It becomes manual after AL52 events/hour Logged only if manuale
Icon	Blinking ⚠
Action	Alarm relay + buzzer ON
REGULATION	
Alarm	Alarm relay + buzzer ON
Other loads	OFF

39.10 ALC2: GENERIC SIGNAL ALARM

Label on the display	**ALC2:** generic signal alarm (if AL55 = 0)
Origin	Digital input configured as generic alarm 2 active for AL57 time
Reset	Digital input configured as generic alarm not active for AL58 time
Restart	Automatic
Icon	Blinking ⚠
Action	Alarm relay + buzzer ON
REGULATION	
Alarm	Alarm relay + buzzer ON

39.11 ALC2: GENERIC ALARM WITH STOP REGULATION

Label on the display	**ALC2:** generic alarm with stop regulation (if AL55 = 1)
Origin	Digital input configured as generic alarm 2 active for AL57 time
Reset	Digital input configured as generic alarm 2 not active for AL58 time
Restart	Automatic – It becomes manual after AL56 events/hour Logged only if manuale
Icon	Blinking ⚠
Action	Alarm relay + buzzer ON
REGULATION	
Alarm	Alarm relay + buzzer ON
Other loads	OFF

ATTENTION
If during AL54 the alarm stop and start again the AL53 time delay is reloaded.

39.12 ACF1 - ACF2 - ACF3 - ACF4 - ACF5 - ACF6 - ACF7 - ACF8 - ACF9 – ACF10 – ACF11 CONFIGURATION ALARM OF THE UNIT

Label on the display	**ACF1** • Heat pump unit without 4-way valve not configured • Wrong configuration of defrost parameters dF22/23 **ACF2** • Condensing control without probe configuration. (one probe per circuit with 2 separate circuits, at least 1 probe for common cond.) • Wrong configuration of the parameters for fan proportional control: FA09 + FA11 + FA12 < FA10 FA12 < FA13 FA07 < FA15 < FA08 • Wrong configuration of the parameters for fan proportional control and pump enabled: FA18 + FA21 + FA20 < FA19 FA21 < FA22 FA16 < FA23 < FA17 • Wrong configuration of the parameters for fan ON/OFF control: FA09 < FA10 • Wrong configuration of the parameters for fan ON/OFF control and pump enabled: FA18 < FA19 • Evaporating/condensing probes not configured in heat pump unit and defrost enabled. • Unit with condenser fan drived by triac regulation (CF43, CF44 = 8/9) and the power supply configuration is Vcc (CF54 = 1…4) • In case of fan management in ON/OFF mode: Chiller: step1<step2<step3 Heat pump: step3<step2<step1 **ACF3** • Two digital/analogue inputs configured as the same function or without the necessary resources (es. compressor # 1 overload but compressor#1 relay not configured) **ACF4** • CF52 = 1 and its digital input not configured or CF52 = 2 and no external temperature probe configured. • CF03 = 1 and no digital input or digital output configurated as motocondensing unit **ACF5** Circuito n°2 not configured but at least one of its resources are present (relay: solenoid pump-down, heaters, inversion valve, fan condensing ON - OFF, recovery, auxilairy)

	ACF6 • The number of compressors/steps of the 2 circuits (CF04 + CF05) is: √ > 4 with no direct compressor start-up (CO10 ≠ 0) or the number of steps is ≠ 0 (CF06), √ > 2 and the intermittent valve is configurated with ON (CO08) and OFF (CO09) ≠ 0 • Pump-down function but at least in one circuit √ The pump-down solenoid relay is not present √ No pump-down pressure switch or evaporating probe when ❑ the pump-down is enabled with unit in start Or ❑ No low pressure switch configurated. • The compressor configuration with CF04 and CF05 but not the relay outputs: √ Main √ Intermittent valve when enabled with the ON / OFF time, CO08 / CO09 ≠ 0 √ When the by-pass time ≠ 0 and there is no partialization or by-pass valve configured √ Motor part_2 with part-winding √ The necessary step valve configurated • One relay is configured: √ Too much compressors √ Intermittent valve when ON / OFF time CO08 / CO09 ≠ 0 √ By-pass gas when the by-pass = 0 √ Compressor Motor coil with direct compressor start-up • Too much step valve or CO12≠0 and unit configured with single stage compressor **ACF7** Evaporator pump √ Enabled (CO15 ≠ 0) but the relay is not configured √ Not enabled (CO15 = 0) but the relay is configured Condenser pump √ Enabled (CO20 ≠ 0) but the relay is not configured √ Not enabled (CO20 = 0) but the relay is configured Alarm configuration water pump in antifrizee alarm • if Ar21=1 and Ar22=0 **ACF8** • Thermoregulation probe: ✓ The thermoregulation probe (in chiller configured by ST09, in heat pump when enabled configured by ST10) is not properly configurated (it does not exist or it is not a NTC) **ACF9** Compressor inverter controlled • 2 anologue output configurated for the same compressor • the analogue output is configurated but is not configurated the relay • unit configured as motor condensing but also compressor inverter controlled enabled **AC10** Compressor with different weight capacity: • one compressor configured with weight = 0 • termoregolation not neutral zone **AC11** Geothermal function / alarm differential inlet_outlet: • wrong configuration of the probes involved in the regulation (one NTC probe and one pressure probe)
Origin	Wrong programming
Reset	Correctly programming
Restart	Automatic
Icon	Blinking ⚠
Action	Alarm relay + buzzer ON

39.13 ARTF CLOCK FAILURE

Label on the display	**ArtF** (clock failure)
Origin	Clock chip failure
Reset	Change clock chipset
Restart	Manual in function menu
Icon	Blinking ⚠
Action	Alarm relay + buzzer ON
Regulation	
Loads	Not changed
Energy saving	Disabled if based on RTC
Unit ON/OFF	Disabled if based on RTC

39.14 ARTC CLOCK ALARM

Label on the display	**ArtC** (clock alarm)
Origin	Wrong setting
Reset	Clock adjusted
Restart	Manual in function menu
Icon	Blinking ⚠
Action	Alarm relay + buzzer ON
Regulation	
Loads	Not changed
Energy saving	Disabled if based on RTC
Unit ON/OFF	Disabled if based on RTC

39.15 AEUN: UNLOADING FROM HIGH TEMPERATURE OF THE EVAPORATOR WATER INLET

Label on the display	**AEUn** Unload signalling from evaporator
Origin	During normal running condition when the temperature/pressure of evaporator water inlet is higher than CO34 setpoint for the CO36 time delay.
Reset	▪ If the water temperature is lower than CO34 –CO35 (differential) ▪ Reset for maximum time CO37
Restart	Automatic
Icon	Blinking ⚠
Action	Alarm relay + buzzer OFF

39.16 AEHT: ALARM FROM HIGH TEMPERATURE OF THE EVAPORATOR WATER INLET

Label on the display	**AEht** High water temperate evaporator inlet
Origin	During normal running condition when the temperature/pressure of evaporator water inlet is higher than AL64 setpoint for the AL63 time delay.
Reset	▪ If the water temperature is lower than AL64 – AL65 ▪ With unit in stand by or remote OFF if alarm reset is automatic
Restart	Automatic
Icon	Blinking ⚠
Action	Alarm relay + buzzer ON
REGULATIONS	
Compressor	OFF
Other Loads	Not modified

39.17 AELT LOW WATER TEMPERATURE INLET (ONLY HEAT PUMP)

Label on the display	**AELt**

Origin	During normal running condition when the temperature/pressure of evaporator water inlet is lower than AL69 setpoint. The alarm is not signalled for AL68 seconds starting from compressor activation.
Reset	Evaporator inlet temperature > AL69 + AL70 Unit in STD-BY or remote OFF (when the alarm is automatic reset)
Restart	Always manual if AL67=0 Always automatic if AL67=16 Automatic to manual if 0<AL67<16
Icon	⚠ blinking
Action	Alarm Relay + buzzer ON
Regolatori	
Compressori	OFF
Other Loads	Not modified

AL71 Analog input for low water evaporator inlet temperature
AL71=0 alarm disabled
AL71=1 PB1
…
AL71=6 PB6

ATTENZTION:
The alarm is active in STD-BY, remote OFF, compressor OFF only if it was active when the unit was ON and it was a manual alarm.

39.18 AEDT DIFFERENTIAL ALARM EVAPORATOR WATER INLET – OUTLET TEMPERATURE

Significato label display	**AEdt**
Causa attivazione	The alarm is not signalled for AL74 seconds starting from compressor activation. Alarm signalled if: • Heat Pump: Pb2 – Pb1 > AL77 • Chiller: Pb1 – Pb2 > AL75
Reset	• Heat pump: Pb2 – Pb1 < AL77 – AL78 • Chiller: Pb1 – Pb2 < AL75 – AL 76
Riarmo	Always manual if AL73 = 0 Always automatic if AL73 =16 Automatic to manual if 0<AL73<16
Icona	⚠ blinking and Flow! icon
Azione	Alarm Relay + buzzer ON
Regolatori	
Compressor	OFF
Other Loads	Not modified

AL72 Differential Alarm evaporator water inlet- outlet temperature activation
AL72=0 Alarm disabled
AL72=1 Alarm activated only in chiller
AL72=2 Alarm activated only in heat pump
AL72=3 Alarm activated in chiller anf heat pump

AL79 Probe 1 selection for Inlet / outlet water tempearture differential alarm
Allows to select which probe value NTC/PTC Pb1..Pb6
AL80 Probe 2 selection for Inlet / outlet water tempearture differential alarm
Allows to select which probe value NTC/PTC Pb1..Pb6

ATTENTION:
The alarm is active in STD-BY, remote OFF, compressor OFF only if it was active when the unit was ON and it was a manual alarm.

39.19 ALTI: LOW AIR AMBIENT TEMPERATURE (AIR / AIR UNIT ONLY)

Label on the display	**ALti** (low temperature value of the evaporator air inlet)
Origin	Chiller mode: CF01=0 and evaporator inlet NTC probe lower than AL33 for AL35 seconds. Heat pump: CF01=0 and evaporator inlet NTC probe lower than lower than AL42 forAL45 seconds In stand-by or remote OFF: the evaporator inlet NTC probe lower than the lowest value compared between AL33 and AL42.

Reset	Chiller: evaporator inlet NTC probe higher than AL33 + AL34. Heat pump: evaporator inlet NTC probe higher than AL42 + AL43. In stand-by or remote OFF: the evaporator inlet NTC probe higher than AL33+AL34 or AL42+AL43.
Restart	Automatic
Icon	Blinking ⚠
Action	Alarm Relay + and buzzer on

39.20 AEP1 - AEP2 EVAPORATOR PUMPS / SUPPLY FAN MAINTENANCE REQUEST

Label on the display	**AEP1** (Main water pump) **AEP2** (Support water pump)
Activation	Load running hours > counter setpoint for that load (CO26 or CO27)
Reset	Running hour reset (Hour label in Menu function)
Restart	Manual
Icon	⚠ blinking
Actions	Alarm relay and buzzer activated
REGULATIONS	
Actions	Only signalling
Loads	Not modified

39.21 ACP1 - ACP12 CONDENSER PUMPS MAINTENANCE REQUEST

Label on the display	**ACP1** (main water pump) **ACP2** (support water pump)
Activation	Load running hours > counter setpoint for that load (CO28 or CO29)
Reset	Running hour reset (Hour label in Menu function)
Restart	Manual
Icon	⚠ blinking
Actions	Alarm relay and buzzer activated
REGULATION	
Actions	Only signalling
Loads	Not modified

39.22 B1HP - B2HP HIGH PRESSURE SWITCH CIRCUIT 1 AND 2

Label on the display	**b1HP** (high pressure switch circuit #1) **b2HP** (high pressure switch circuit #2)
Reason	The unit is running and the digital input of the high pressure switch is active
Reset	Digital input not active
Restart	Reset procedure in Menu function Always manual AL61 = 0 Always automatic AL61 =16 From manual to utomatic if AL61 value is between 1 and 15
Icon	blinking ⚠
Action	Alarm Relay + and buzzer on
Regulation	
Condensing fan	If FA02=0 the fan is forced at maximum speed for 60 seconds then switched off If FA02=1 the fan is forced at maximum speed for 60 seconds then regulate according to normal fan regulation

39.23 B1LP - B2LP LOW TEMPERATURE / LOW CONDENSING PRESSURE OF THE CIRCUIT

Label on the display	**b1lP** (low pressure digital input of the circuit 1) **b2lP** (low pressure digital input of the circuit 2)
Origin	When the condensing probe value is lower than AL03 setpoint if the unit is: • In chiller or heat pump • Stand-by o remote OFF if AL08 = 1 • In defrost if AL06=1 The alarm is not signalled: • during the defrost the alarm is not signalled for AL07 time starting 4-way valve activation • during the regulation the alarm is not signalled for AL01 time strting from compressor activation
Reset	When the condensing probe temperature is higher than AL03 + AL04 (differential)
Restart	Automatic– Manual after AL05 events per hour (Reset procedure in Menu function).
Icon	Blinking ⚠
Action	Alarm Relay + and buzzer on

39.24 B1AC - B2AC - B1AC - B2AC ANTIFREEZE ALARM / LOW OUTLET TEMPERATURE (AIR / AIR UNIT IN CHILLER MODE)

Label on the display	**b1AC** (anti-freeze alarm of the circuit #1 in chiller) **b2AC** (anti-freeze alarm of the circuit #2 in chiller) **b1Ac** (anti-freeze alarm signalling of the circuit #1 in chiller) **b2Ac** (anti-freeze alarm signalling of the circuit #2 in chiller) Both the labels are displayed when the alarm is coming from the evaporator inlet probe or evaporator common outlet probe or when there is only one digital input configured.
Origin	Normal conditions, stand-by, remote OFF: when the anti-freeze probe value is lower than AL33 for AL35 seconds. With the anti-freeze digital input is active.
Reset	When the anti-freeze probe value is higher than A33+ AL34(differential) With the anti-freeze digital input is active.
Restart	Automatic – Manual after AL36 events per hours (Reset procedure in Menu function).
Icon	Blinking ⚠
Action	If AL37=0 only the compressors are turned off and than display shows **b1Ac b2Ac,** the buzzer and the alarm relay are not activated. If AL37=1 only the compressors are turned off and than display shows **b1Ac b2Ac,** the buzzer and the alarm relay are activated. If the alarm comes from the digital input also the anti-freeze heaters are turned on.

39.25 B1AH - B2AH ANTI-FREEZE ALARM / LOW OUTLET AIR TEMPERAURE(AIR/AIR UNIT ONLY) ON HEAT PUMP MODE

Label on the display	**b1AH** (anti-freeze alarm of the circuit #1 in heat pump) **b2AH** (anti-freeze alarm of the circuit #2 in heat pump) **b1Ah** (anti-freeze alarm signalling of the circuit #1 in heat pump) **b2Ah** (anti-freeze alarm signalling of the circuit #2 in heat pump) Both the labels are displayed when the alarm is coming from the evaporator inlet probe or evaporator common outlet probe or when there is only one digital input configured.
Origin	Normal conditions, stand-by, remote OFF: when the anti-freeze probe value is lower than AL42 for AL45 seconds. With the anti-freeze digital input is active.
Reset	When the anti-freeze probe value is higher than AL42 + AL43(differenziale). With digital input ont active
Restart	Automatic – Manual after AL46 events per hour (Reset procedure in Menu function).
Icon	Blinking ⚠
Action	If AL47=0 only the compressors are turned off and than display shows **b1Ah - b2Ah,** the buzzer and the alarm relay are not activated. If AL47=1 only the compressors are turned off and than display shows **b1AH - b2AH,** the buzzer and the alarm relay are activated. If the alarm comes from the digital input also the anti-freeze heaters are turned on.

Attention
Par. **AL44** anti-freeze alarm delay (low outlet air temperature air/air unit) when the unit starts in heat pump mode.
In stand-by or remote OFF: there is an anti-freeze alarm and the time delay in AL44<>0, if the unit is manually turned on in heat pump from keyboard or remote input, the alarm is reset so the unit can start at least for the time set in AL44 in order to heat the water or the

air. After the AL44 delay if the anti-freeze probe is still lower than AL42 setpoint for AL45 seconds the unit is locked again with an anti-freeze alarm.

39.26 B1HP - B2HP HIGH CONDENSING PRESSURE / TEMPERATURE OF THE CIRCUIT

Label on the display	**b1hP** (high pressure analog input of the circuit #1) **b2hP** (high pressure analog input of the circuit #2)
Origin	In chiller or heat pump, if the condensing probe is higher than AL09 setpoint.
Reset	If the condensing probe value is lower than AL09 –AL10 (differential)
Restart	Reset procedure in Menu function. Always manual AL61 = 0 Always automatic AL61 =16 From manual to utomatic if AL61 value is between 1 and 15
Icon	Blinking ⚠
Action	Alarm Relay + and buzzer on
Regulation	
Condensing fan	If FA02=0 the fan is forced at maximum speed for 60 seconds then switched off If FA02=1 the fan is forced at maximum speed for 60 seconds then regulate according to normal fan regulation

39.27 B1LP - B2LP LOW PRESSURE SWITCH CIRCUIT #1 OR 2

Label on the display	**b1LP** (low pressure switch circuit #1) **b2LP** (low pressure switch circuit #2)
Origin	• With the digital input is active • when the low pressure switch input is active (if AL08=1 also in stand-by or remote OFF) • In defrost if AL06=1 when the compressor low pressure switch input is active. The alarm is not signalled: • during the defrost the alarm is not signalled for AL07 time starting 4-way valve activation • during the regulation the alarm is not signalled for AL01 time strting from compressor activation
Reset	Digital input not active
Restart	Automatic - Manual after AL05 events per hour (Reset procedure in Menu function)
Icon	Blinking ⚠
Action	Alarm Relay + and buzzer on

39.28 B1LP - B2LP LOW EVAPORATING PRESSURE OF THE CIRCUIT (WITH PRESSURE TRANSDUCERS ONLY)

Label on the display	**b1lP** (low evaporator pressure from analogue input #1) **b2lP** (low evaporator pressure from analogue input #2)
Origin	When the evaporator probe value is lower than AL03 setpoint if the unit is: • In chiller or heat pump mode; • Stand-by or remote OFF when AL08 = 1 • In defrost when AL06=1 The alarm is not signalled if: • In defrost ,for the time AL07, when the 4-way valve is turned on. • For the time set in AL01 after turning on the compressor.
Reset	When the condensing probe temperature is higher than AL03 + AL04 (differential)
Restart	Automatic– Manual after AL05 events per hour (Reset procedure in Menu function).
Icon	Blinking ⚠
Action	Alarm Relay + and buzzer on

ATTENTION When the pressure transducers are configured the low pressure alarms are related only to transducer values.

39.29 B1TF- B2TF CONDENSER FAN OVERLOAD ALARM

Label on the display	**b1tF** (Condenser fan overload alarm of the circuit #1) **b2tF** (Condenser fan overload alarm of the circuit #2)
Origin	When the digital input is active
Reset	When the digital input is not active
Restart	Manual (reset from the function menu)
Icon	Blinking ⚠
Action	Alarm relay + buzzer ON

39.30 B1EU – B2EU: UNLOADING FROM LOW TEMPERATURE OF THE EVAPORATOR WATER OUTLET

Label on the display	**b1EU** Unload signalling from evaporator circuit n° 1 **b2EU** Unload signalling from evaporator circuit n° 2
Origin	During normal running condition when the temperature of evaporator water outlet is lower than CO38 setpoint
Reset	▪ If the water temperature is higher than CO38 + CO39 (differential) ▪ With unloading ON after the CO40 time delay
Restart	Automatic
Icon	Blinking ⚠
Action	Alarm relay + buzzer
Regulation	
Compressor	OFF
Other loads	Not modified

39.31 C1HP - C2HP COMPRESSOR HIGH PRESSURE ALARMS

Label on the display	**C1HP** (compressor high pressure alarm 1) – **C2HP** (compressor high pressure alarm 2)
Origin	The unit is running and the digital input of the compressor high pressure switch is active
Reset	Digital input not active
Restart	Manual: reset procedure in Menu function
Icon	blinking ⚠
Action	Alarm Relay + and buzzer on
Regulation	
Compressor	OFF
Other loads	Not modified

39.32 C1OP - C2OP PRESSURE SWITCH ALARM / COMPRESSOR OIL

Label on the display	**C1oP** (Compressor pressure switch #1) … **C2oP** (Compressor pressure switch #2)
Origin	The alarm is not signalled during the AL11 delay after turning on the compressor. The alarm is signalled if the digital input is active for AL12 seconds
Reset	Digital input not active
Restart	Automatic - Manual after AL13 events per hour (Reset procedure in Menu function)
Icon	Blinking ⚠
Action	Alarm Relay + and buzzer on

OIL ALARM FROM PRESSURE SWITCH OR OIL LEVEL SWITCH (screw)
Occasionally it is possible to find both the safety systems, the delay, the active input duration and the number of events per hour allow to set-up both the protections.

Par. **AL11** Oil alarm delay after on compressor.
It allows to set a time delay before signalling the oil or the oil level switch alarms after the on compressor.
Par. **AL12** Duration of the pressure switch / oil level switch in normal operating conditions.
Duration of the oil level switch activation during normal running condition.
It allows to set the time delay before signalling the alarm. **AL11** defines the delay counting, it helps to override the low pressure or the low oil level determined, for example, by a new partialization step of the compressor itself.
Par. **AL13** Maximum number of alarm events per hour.
It determs the maximum number of alarm events before switching the restart from automatic to manual.

39.33 C1DT - C2DT HIGH COMPRESSOR DISCHARGE TEMPERATURE ALARM

Label on the display	**C1dt** (High discharge temperature of the compressor #1) -…**C2dt** (High discharge temperature of the compressor #2)
Origin	The compressor discharge temperature is higher than AL49 setpoint. **ATTENTION** The display resolution is 0.1°C until the read-out is 99.9, over 100°C it is 1°C.
Reset	If the probe value of the high discharge temperature is lower than "AL49 – AL50"
Restart	Automatic. Manual when there are AL51 per hour (Reset procedure in Menu function).
Icon	Blinking ⚠
Action	Alarm Relay + and buzzer on

39.34 C1TR - C2TR COMPRESSOR OVERLOAD ALARM

Label on the display	**C1tr** (Compressor #1 overload alarm) -…**C2tr** (Compressor #1 overload alarm 2)
Origin	With active digital input The alarm is not detected for AL24 time delay after the compressor activation
Reset	When the digital input is not active
Restart	Manual after AL25 events/hour, to reset the alarm enter the function menu under cOtr
Icon	Blinking ⚠
Action	Alarm relay + buzzer ON
Compressor involved	If AL27=0 or 1: OFF
Compressor not involved	If AL27=0: it follows its regulation. If AL27=1: OFF

ATTENTION
The parameter AL27 determines the functioning of the overload alarm of the compressors.
If AL27 = 0 single compressor locked when its digital input protection is active, on the display the corresponding alarm message.
If AL27 = 1 all the circuit of the compressor is locked when one digital input protection is active, on the display the corresponding alarm message.

39.35 B1DF – B2DF DEFROST ALARM

Label on the display	**b1dF** (Defrost alarm of the circuit #1) **b2dF** (Defrost alarm of the circuit #2)
Origin	Only in defrost if dF01 = 1,3 (defrost by temperature/pressure or external contact): when the defrost ends after the DF05 timeout.
Reset	▪ Stand - by or remote ON-OFF ▪ Next defrost ends for temperature/pressure
Restart	Automatic if next defrost ends for temperature/pressure, otherwise manual.
Icon	Blinking ⚠
Action	Alarm relay + buzzer OFF

39.36 B1CU – B2CU UNLOADING: HIGH CONDENSING TEMPERATURE / PRESSURE IN CHILLER

Label on the display	**b1CU** (unloading high temperature from condenser of the circuit # 1) **b2CU** (unloading high temperature from condenser of the circuit # 2)
Origin	When the temperature/pressure of condenser probe control is higher then CO41
Reset	▪ When the temperature/pressure of the condenser probe is lower than CO41 – CO42 ▪ maximum unloading working time CO45
Restart	Automatic
Icon	
Action	Alarm relay + buzzer OFF

39.37 B1CU – B2CU: UNLOADING: LOW CONDENSING TEMPERATURE / PRESSURE IN HEAT PUMP

Label on the display	**b1CU** (unloading message from condenser #1) **b2CU** (unloading message from condenser #2)
Origin	During normal running condition when the temperature/pressure of evaporator/condenser probe is lower than < CO43 setpoint
Reset	▪ when the temperature/pressure of evaporator/condenser probe value is higher than CO43 + CO44 ▪ maximum unloading working time CO45
Restart	Automatic
Icon	
Action	Alarm relay + buzzer OFF

39.38 B1PH - B2PH: PUMP DOWN STOP ALARM FROM PRESSURE SWITCH / LOW PRESSURE SWITCH

Label on the display	**b1PH** (Pump down stop alarm of the circuit 1) **b2PH** (Pump down stop alarm of the circuit 2)
Origin	Pressure switch: if CO30 = 1,2,3,4 and ID not active, the pump down stops because of the timeout CO33. Transducer: if CO30 = 1,2,3,4 and the set CO31 is not reached: the pump stops because of the timeout CO33.
Reset	From thermoregulation start-up and ID not active From thermoregulation start-up with evaporating pressure higher than CO31 + CO32 (differential)
Restart	Automatic – Manual and logged after AL28 events per hour (reset procedure in function menu).
Icon	Blinking ⚠
Action	Alarm relay + buzzer ON when it becomes manual

39.39 B1PL - B2PL ALARM DURING THE PUMP DOWN START-UP FROM PUMP DOWN PRESSURE SWITCH / LOW PRESSURE TRANSDUCER

Label on the display	**b1PL** (pump down alarm in start-up of circuit #1) **b2PL** (pump down alarm in start-up of circuit #2)
Origin	Pump down pressure switch : CO30 = 1,2,3,4 and compressors start-up and digital input not active for the time set in CO33 Pump down transducer: CO30 = 1,2,3,4, compressors start-up and the set CO31 is not reached in the interval time CO33.
Reset	From thermoregulation start-up and ID not active From thermoregulation start-up with evaporating pressure higher than CO31 + CO32
Restart	Automatic - Manual and logged after AL29 events per hour if AL30=1 (reset procedure in function menu). If AL30 = 0 it is automatic and not logged.
Icon	Blinking ⚠
Action	Alarm relay + buzzer ON when it becomes manual

39.40 C1MN - C2MN COMPRESSOR MAINTENANCE

Label on the display	**C1Mn** (Compressor #1 maintenance) –…**C2Mn** (Compressor #2 maintenance)
Origin	Compressor running hours > Hour counter setpoint (CO24 or CO25)
Reset	Hour reset in function menu
Restart	Manual
Icon	Blinking ⚠
Action	Alarm relay + buzzer ON
Regulation	
Action	Only display warning messages
Loads	Not changed

39.41 ALARM RELAY AND BUZZER

Alarm relay / buzzer outputs

Origin	Alarms still active Alarms not reset
Reset relay alarm	Whitout alarms In stand- by or remote ON-OFF if AL59 = 1
Buzzer silencing	By pushing one of the key of the front panel

The alarm relay is enabled only by configurating the corresponding output resource.

39.42 KEYABOARD ALARM

Alarm code	Keyaboard Alarm description
noL	No data communication between the keyaboard and the regulator.
Atr1	Keyaboard n° 1 set up but not connected to regulator
Atr2	Keyaboard n° 2 set up but not connected to regulator

40 AUTOMATIC TO MANUAL ALARM PROCEDURE

NUMBER OF EVENTS PER HOUR

Each hour counting is divided in 16 intervals, each made of 3600 / 16 = 225 seconds (3 minuts and 45 seconds).

1°Int	2°Int	3°Int	4°Int	5°Int	6°Int	7°Int	8°Int	9°Int	10°Int	11°Int	12°Int	13°Int	14°Int	15°Int	16°Int

After the unit start-up, each interval is marked as “not active”. During the interval counting, for 255seconds, if at least an alarm event appears, the interval itself is marked “Active”.
Starting from the first interval the instrument calculates the 16 intervals and, at the end, it restats overwriting from the first.
In this way the last hour is always monitored and counted the active intervals. when the number of active intervals reaches the threshold set with the corresponding parameter the alarm becomes manual.
By setting the threshold (parameter)=0 the alarm is manual from its first activation while if the threshold=16 the alarm is always automatic (In this case, to change in manual, the threshold should be 17).

41 TABLE OF THE OUTPUT STATUS IN ALARM CONDITION

The alarm codes are made of letters and numbers to define the different typologies:.

41.1 ALARM: "A" TYPE AND STATUS OF THE LOADS IN CASE OF ALARM

Alarm Code	Alarm description	Compressor	Anti freeze heaters Boiler	Support heaters	Evap. Pump. Supply fan	Condenser Pump	Ventilaz. cond. Cir1 Cir2	Auxiliary relay
ALti	Low air temperature of the evaporator inlet (air / air unit) Alarm							
AEFL	Evaporator flow alarm	Yes	Yes (boiler)		Yes **(3)**		Yes	
ACFL	Condenser flow alarm	Yes				Yes **(3)**	Yes	
AtSF	Fan supply overload alarm	Yes		Yes	Yes		Yes	
AEUn	Unloading signalling from high temp of. evaporator water							
AELt	Low temperature of the evaporator inlet in Heat Pump mode	Yes						
Aedt	Differential temperature alarm (between temperature inlet and outlet)	Yes						
AtE1	Water pump overload alarm evaporator 1	Yes **(4)**	Yes (boiler) **(5)**		Yes		Yes	
AtE2	Water pump overload alarm support evaporator 2	Yes **(4)**	Yes (boiler) **(5)**		Yes		Yes	
AtC1	Water pump overload alarm condenser 1	Yes **(4)**				Yes	Yes	
AtC2	Water pump overload alarm support condenser 2	Yes **(4)**				Yes	Yes	
AEP1	Water pump maintenance evaporator 1							
AEP2	Water pump maintenance support evaporator 2							
ACP1	Water pump maintenance condenser 1							
ACP2	Water pump maintenance support condenser 2							
ArtC	Clock alarm							
Atr1	Remote terminal n° 1 configured but not connected							
Atr2	Remote terminal n° 2 configured but not connected							
ArtF	clock failure							
ALc1	Generic alarm n°1	Yes			Yes	Yes	Yes	Yes
ALc2	Generic alarm n°2 and AL56=0							
ALc2	Generic alarm n°2 and AL56=1	Yes			Yes	Yes	Yes	Yes
AEE	Eeprom alarm	Yes			Yes	Yes	Yes	Yes
AFr	Power supply frequency alarm (if CF54=2, 4)	Yes			Yes	Yes	Yes	Yes
ACF1	Configuration alarm	Yes			Yes	Yes	Yes	Yes
ACF2	Configuration alarm	Yes			Yes	Yes	Yes	Yes
ACF3	Configuration alarm	Yes			Yes	Yes	Yes	Yes
ACF4	Configuration alarm	Yes			Yes	Yes	Yes	Yes
ACF5	Configuration alarm	Yes			Yes	Yes	Yes	Yes
ACF6	Configuration alarm	Yes			Yes	Yes	Yes	Yes
ACF7	Configuration alarm	Yes			Yes	Yes	Yes	Yes
ACF8	Configuration alarm	Yes			Yes	Yes	Yes	Yes
ACF9	Configuration alarm	Yes			Yes	Yes	Yes	Yes
AC10	Configuration alarm	Yes			Yes	Yes	Yes	Yes

AC11	Configuration alarm	Yes			Yes	Yes	Yes	Yes
AEht	High water temperature inlat evaporator	Yes						

(1) = with probe configured as anti-freeze / boiler control and Ar10 = 0
(2) = with probe configured as auxiliary relay control
(3) = with manual alarm procedure
(4) = Off compressors spenti with only 1 water pump configured or with 2 pumps but both in alarm from the corresponding digital inputs.
(5) = Boiler heaters off with only 1 water pump configured or with 2 pumps but both in alarm from the corresponding digital inputs (in this case the boiler heaters are on only with thermoregulation anti-freeze setpoint as evaporator protection function)

41.2 ALARM: "B" TYPE AND STATUS OF THE LOADS IN CASE OF ALARM

Alarm Code	Alarm description	Compressors of the circuit (*n*)	Compressors of the other circuit	Fan condensing of the circuit (*n*)	Fan condensing of the other circuit
b(*n*)HP	High pressure switch of the circuit **(*n*)**	Yes		Yes after 60 seconds	
b(*n*)LP	Low pressure switch of the circuit **(*n*)**	Yes		Yes	
b(*n*)AC	Anti-freeze in chiller of the circuit **(*n*)**	Yes		Yes	
b(*n*)AH	Anti-freeze in heat pump of the circuit **(*n*)**	Yes		Yes	
b(*n*)hP	High condensing pressure of the circuit **(*n*)**	Yes		Yes after 60 seconds	
b(*n*)hP	High condensing temperature from NTC of the circuit **(*n*)**	Yes		Yes after 60 seconds	
b(*n*)LP	Low condensing pressure - (evaporating with low pressure transducer) with transducer of the circuit of the **(*n*)**	Yes		Yes	
b(*n*)lP	Low condensing temperature NTC circuit **(*n*)**	Yes		Yes	
b(*n*)tF	Fan overload circuit **(*n*)**	Yes		Yes	
b(*n*)PH	Pump down alarm in stop regulation of the circuit **(*n*)**	Yes		Yes	
b(*n*)PL	Pump down in regulation start-up of the circuit **(*n*)**	Yes		Yes	
b(*n*)dF	Bad defrost circuit **(*n*)**				
b(*n*)Cu	Unloading from condenser high temp/press of the circuit **(*n*)**				
b(*n*)Cu	Unloading from evaporator low temp/press of the circuit **(*n*)**	Yes		Yes	
b(*n*)rC	Recovery function disabled in circuit **(n)**				
b(*n*)ds	Circuit **(n)** disabled from keyboard	Yes		Yes	
b(*n*)Ac	Anti-freeze circuit **(n)** message in chiller				
b(*n*)Ah	Anti-freeze circuit **(n)** message in heat pump				

(*n*) identifies the circuit 1 or 2

41.3 ALARM: "C" TYPE AND STATUS OF THE LOADS IN CASE OF ALARM

Alarm Code	Alarm description	Compressor (*n*)	Compressors not involved
C(*n*)HP	Compressor(*n*) high pressure switch	Yes	

C(*n*)oP	Compressor(*n*) oil pressure switch / Oil level switch	Yes	
C(*n*)tr	Compressor(*n*) overload	Yes	
C(*n*)dt	Compressor high discharge temperature	Yes	
C(*n*)dS	Compressor (n) disabled from keyboard	Yes	
C(*n*)Mn	Compressor(*n*) maintenance		

(*n*) identifies the compressor 1, 2 , 3 , 4 , 5 , 6

42 TABLE OF THE PARAMETERS

Label	Description
ALL	Shows all the parameters
ST	Shows only the Thermoregulation parameters
CF	Shows only the Configuration parameters
SD	Shows only the Dynamic Setpoint parameters
ES	Shows only the Energy Saving, RTC parameters
CO	Shows only the compressor parameters
US	Shows only the Auxiliary Output parameters
FA	Shows only the Fan Control parameters
Ar	Shows only the Antifreeze Control parameters
DF	Shows only the Defrost parameters
AL	Shows only the Alarm parameters

Thermoregulation					
Parameter	**Description**	**min**	**max**	**u.m.**	**Resolution**
ST 1	Chiller Setpoint Allow to modify the setpoint of the unit in chiller mode	ST02	ST03	°C/°F	dec/int
ST 2	Chiller minimum Setpoint Minimum setpoint limit for ST 1	-50.0 -58	ST01	°C °F	dec/int
ST 3	Chiller maximum Setpoint Maximum setpoint limit for ST 1	ST01	70.0 158	°C °F	dec/int
ST 4	Heat pump setpoint Allow to modify the setpoint of the unit in heat pump mode	ST05	ST06	°C/°F	dec/int
ST 5	Heat pump minimum Setpoint Minimum setpoint limit for ST 4	-50.0 -58	ST04	°C °F	Dec int
ST 6	Heat pump maximum Setpoint Maximum setpoint limit for ST 4	ST04	70.0 158	°C °F	Dec int
ST 7	Regulation band in chiller mode	0.0 0	25.0 45	°C °F	Dec int
ST 8	Regulation band in heat pump mode	0.0 0	25.0 45	°C °F	Dec int
ST 9	Thermoregulation probe selection in chiller 0= Temperature probe NTC for evaporator inlet 1= Temperature probe NTC for evaporator outlet 1 2= Temperature probe NTC for evaporator outlet 2 3= Temperature probe NTC for common evaporator outlet 4= Temperature NTC probe from remote keyboard 1 5= Temperature NTC probe from remote keyboard 2	0	5		
ST 10	Thermoregulation probe selection in heat pump 0= Temperature probe NTC for evaporator inlet 1= Temperature probe NTC for evaporator outlet 1 2= Temperature probe NTC for evaporator outlet 2 3= Temperature probe NTC for common evaporator outlet 4= Temperature NTC probe from remote keyboard 1 5= Temperature NTC probe from remote keyboard 2 6= Temperature probe for water common inlet of the condenser 7= Temperature probe for water inlet of the circuit # 1 condenser 8= Temperature probe for water inlet of the circuit # 2 condenser 9= Temperature probe for water outlet of the circuit # 1 condenser 10= Temperature probe for water outlet of the circuit # 2 condenser 11= Temperature probe for water common outlet of the condenser <u>ATTENTION</u> To have the same thermoregulation for chiller and heat pump mode, set the parameters ST09 and ST10 with the same value	0	11		
ST 11	Type of thermoregulation 0= Proportional 1= Neutral zone	0	1		
ST 12	Set point for change over function	-50.0 -58	70.0 158	°C °F	Dec Int
ST 13	Differential for change over function	0.1 1	25.0 45	°C °F	Dec Int
Pr1	Password	0	999		
Pr2	Password	0	999		
Pr3	Password	0	999		
Display read-out					

Parameter	Description	min	max	M. u.	Resolution
dP 1	Default read-out of the top display	0	15		
dP 2	Default read-out of the bottom display	0	18		
dP 3	Default display read-out configuration top / bottom 0= Configurable (parameters dP1 and dP2) 1= Top display: Evaporator IN, Bottom display: Evaporator OUT 2= Top display: Condenser IN, Bottom display: Condenser OUT 3=Top display: temperature/Condensing pressure, Bottom Display: evaporating pressure	0	3		
dP 4	Display visualization in stand by mode 0= the display visualizes “Stby” 1= the display visualizes what defined by parameters dP1 and dP2 2= the display visualizes “OFF”	0	2		
	Display read-out of the remote keyboards				
dP 5	Display default read-out of the remote keyboard 1 0= the read-out depends on the paremeters dP01 – dP02 – dP03 1= the read-out shows the NTC probe of the remote panel	0	1		
dP 6	Display default read-out of the remote keyboard 2 0= the read-out depends on the paremeters dP01 – dP02 – dP03 1= the read-out shows the NTC probe of the remote panel.	0	1		
dP 7	Display visualization of the remote keyboard 1 in stand by mode 0= the display visualizes “Stby” 1= the display visualizes what defined by parameters dP1 and dP2 2= the display visualizes “OFF”	0	2		
dP 8	Display visualization of the remote keyboard 2 in stand by mode 0= the display visualizes “Stby” 1= the display visualizes what defined by parameters dP1 and dP2 2= the display visualizes “OFF”	0	2		
Pr1	Password	0	999		
Pr2	Password	0	999		
Pr3	Password	0	999		
	Configuration				
Parameter	**Description**	**min**	**max**	**M. u.**	**Resolution**
	Unit Model				
CF 1	Type of unit 0= Air / air Chiller 1= Air / water Chiller 2= Water / water Chiller	0	2		
CF 2	Selection type rof unit 1= only chiller 2= only heat pump 3= chiller and heat pump	0	3		
CF 3	Motocondensing unit 0= no 1= si	0	1		
	Compressors				
CF 4	Number of compressors circuit 1 1= 1 2= 2	1	2		
CF 5	Number of compressors circuit 2 0= 0 1= 1	0	1		
CF 6	Number of capacity steps 0= none 1= 1 2= 2 3= 3	0	3		
	Analog Inputs				
CF 7	Pressure or temperature analogue input functioning **0 = Temperature / pressure NTC – 4÷20 mA :** The condensing temperature is controlled with NTC probe while for the evaporating pressures of the circuits 1 and 2 and the pressure probe configured as auxiliary output 1 and 2 are controlled with 4÷20mA transducers. **1 = Pressure control with 4÷20 mA:** To control the evaporating and condensing pressures it is necessary a 4÷20mA transducer. **2 = Temperature / pressure NTC – 0÷5Vdc:** The condensing temperature is controlled with NTC probe while for the evaporating pressures of the circuits 1 and 2 and the pressure probe configured as auxiliary output 1 and 2 are controlled with 0÷5Vdc transducers. **3 = Pressure control with 0÷5Vdc:** To control the evaporating and condensing pressures it is necessary a ratiometric 0÷5Vdc transducer.	0	3		

CF 8	PB1 Configuration If configured as digital input	0 o 1	18 C38		
CF 9	PB2 Configuration If configured as digital input	0 o 1	18 C38		
CF 10	PB3 Configuration If configured as digital input	0 o 1	23 C38		
CF 11	PB4 Configuration If configured as digital input	0 o 1	23 C38		
CF 12	PB5 Configuration If configured as digital input	0 o 1	18 C38		
CF 13	PB6 Configuration If configured as digital input	0 o 1	18 C38		
	Probe Offset				
CF 14	PB1 Offset	-12.0 21	12.0 21	°C °F	Dec int
CF 15	PB2 Offset	-12.0 21	12.0 21	°C °F	Dec int
CF 16	PB3 Offset	-12.0 -21 -5.0 -72	12.0 21 5.0 72	°C °F bar psi	Dec int dec int
CF 17	PB4 Offset	-12.0 -21 -5.0 -72	12.0 21 5.0 72	°C °F bar psi	Dec int dec int
CF 18	PB5 Offset	-12.0 21	12.0 21	°C °F	Dec int
CF 19	PB6 Offset	-12.0 21	12.0 21	°C °F	Dec int
CF 20	Pressure value at 4mA or 0.5 Vdc of the PB3 transducer	0 -14	50.0 725	Bar psi	Dec int
CF 21	Pressure value at 20mA or 5 Vdc of the PB3 transducer	0 -14	50.0 725	Bar psi	Dec int
CF 22	Pressure value at 4mA or 0.5 Vdc of the PB4 transducer	0 -14	50.0 725	Bar psi	Dec int
CF 23	Pressure value at 20mA or 5 Vdc of the PB4 transducer	0 -14	50.0 725	Bar psi	Dec int
	Digital Inputs				
CF 24	Configuration of ID1	0	C38		
CF 25	Configuration of ID2	0	C38		
CF 26	Configuration of ID3	0	C38		
CF 27	Configuration of ID4	0	C38		
CF 28	Configuration of ID5	0	C38		
CF 29	Configuration of ID6	0	C38		
CF 30	Configuration of ID7	0	C38		
CF 31	Configuration of ID8	0	C38		
CF 32	Configuration of ID9	0	C38		
CF 33	Configuration of ID10	0	C38		
CF 34	Configuration of ID11	0	C38		
	Relay Outputs				
CF 35	Configuration of RL1	0	C36		
CF 36	Configuration of RL2	0	C36		
CF 37	Configuration of RL3	0	C36		
CF 38	Configuration of RL4	0	C36		
CF 39	Configuration of RL5	0	C36		
CF 40	Configuration of RL6	0	C36		
CF 41	Configuration of RL7	0	C36		
CF 42	Configuration of RL8	0	C36		
	Proportional output				
CF 43	OUT 3 configuration 0= Not enabled 1= 0..10V signal for compressor 1 inverter controlled 2= 0..10V signal for compressor 2 inverter controlled 3= 0..10V signal for auxiliary output 1 4= 0..10V signal for auxiliary output 1 5= 0..10V signal for geothermal function 6= 0..10V signal for condenser fan circuit 1 7= 0..10V signal for condenser fan circuit 2 8= PWM signal for condenser fan circuit 1 9= PWM signal for condenser fan circuit 2 o1 .. c26 signal to drive external relay	0 o 1	9 c26		

CF 44	OUT 4 configuration 0= Not enabled 1= 0..10V signal for compressor 1 inverter controlled 2= 0..10V signal for compressor 2 inverter controlled 3= 0..10V signal for auxiliary output 1 4= 0..10V signal for auxiliary output 1 5= 0..10V signal for geothermal function 6= 0..10V signal for condenser fan circuit 1 7= 0..10V signal for condenser fan circuit 2 8= PWM signal for condenser fan circuit 1 9= PWM signal for condenser fan circuit 2 o1 .. c26 signal to drive external relay	0 o 1	9 c26		
CF 45	OUT 5 configuration 0= Not enabled 1= 0..10V signal for compressor 1 inverter controlled 2= 0..10V signal for compressor 2 inverter controlled 3= 0..10V signal for auxiliary output 1 4= 0..10V signal for auxiliary output 1 5= 0..10V signal for geothermal function 6= 0..10V signal for condenser fan circuit 1 7= 0..10V signal for condenser fan circuit 2 8= 0..10V signal for modulating evaporator pump 9= 0..10V signal for modulating condenser pump o1 .. c26 signal to drive external relay	0 o 1	9 c26		
CF 46	OUT 6 configuration 0= Not enabled 1= 0..10V signal for compressor 1 inverter controlled 2= 0..10V signal for compressor 2 inverter controlled 3= 0..10V signal for auxiliary output 1 4= 0..10V signal for auxiliary output 1 5= 0..10V signal for geothermal function 6= 0..10V signal for condenser fan circuit 1 7= 0..10V signal for condenser fan circuit 2 8= 0..10V signal for modulating evaporator pump 9= 0..10V signal for modulating condenser pump o1 .. c26 signal to drive external relay	0 o 1	9 c26		
Terminale remoto					
CF 47	Remote keyboard 1 configuration 0= Not enabled 1= with NTC temperature sensor on board 2= without NTC temperature sensor on board	0	2		
CF 48	Remote keyboard 2 configuration 0= Not enabled 1= with NTC temperature sensor on board 2= without NTC temperature sensor on board	0	2		
CF 49	Offset of the probe mounted on the remote keyboard 1	-12.0 -21	12.0 21	°C °F	Dec int
CF 50	Offset of probe mounted on the remote keyboard 2	-12.0 -21	12.0 21	°C °F	Dec int
Icon function					
CF 51	Icon and keys for chiller and heat pump 0= ❄ chiller / ☀ heat pump 1= ☀ chiller / ❄ heat pump	0	1		
Chiller / heat pump selection mode					
CF 52	Chiller / heat pump selection 0= selection by keys on the keyboard 1= selection by digital input 2= selection by probe	0	2		
Unit of measurement					
CF 53	Unit of measurement 0= °C / °BAR 1= °F / °psi	0	1		
Voltage frequency					
CF 54	Power supply frequency 0= disabled 1= Frequency 50 Hz and only signalling alarm 2= Frequency 50 Hz and alarm (all output OFF in case of alarm) 3= Frequency 60 Hz and only signalling alarm 4= Frequency 60 Hz and alarm (all output OFF in case of alarm) (ATTENTION: if the condenser fan is not controlled by cut of phase signal (PWM) the parameter CF54 can be configured at 0 value and the frequency alarm is not enabled)	0	4		
Serial Address					
CF 55	Serial address	1	247		

CF 56	Firmware Release (this parameter is only in reading)				
CF 57	Eeprom parameter map (this parameter is only in reading)				
	Enabling compressors				
CF 58	Enabling compressors 0= chiller and heat pump 1= only chiller 2= only heat pump	0	2		
Pr1	Password	0	999		
Pr2	Password	0	999		
Pr3	Password	0	999		
	Dynamic Setpoint				
Parameters	**Description**	**min**	**max**	**M. u.**	**Resolution**
Sd 1	Maximum offset for dynamic setpoint function in chiller	-30.0 -54	30.0 54	°C °F	Dec int
Sd 2	Maximum offset for dynamic setpoint function in heat pump	-30.0 -54	30.0 54	°C °F	Dec int
Sd 3	Setpoint of outside temperature for dynamic setpoint function in chiller	-50.0 -58	70.0 158	°C °F	Dec int
Sd 4	Setpoint of outside temperature for dynamic setpoint function in heat pump	-50.0 -58	70.0 158	°C °F	Dec int
Sd 5	Differential of outside temperature for dynamic setpoint function in chiller	-30.0 -54	30.0 54	°C °F	Dec int
Sd 6	Differential of outside temperature for dynamic setpoint function in heat pump	-30.0 -54	30.0 54	°C °F	Dec int
Pr1	Password	0	999		
Pr2	Password	0	999		
Pr3	Password	0	999		
	Energy saving				
Parameters	**Description**	**min**	**max**	**udm**	**Risoluzione**
ES 1	Start of the Time band 1 (0÷24)	0	24.00	Hr	10 Min
ES 2	End of the Time Band 1 (0÷24)	0	24.00	Hr	10 Min
ES 3	Start of the Time band 2 (0÷24)	0	24.00	Hr	10 Min
ES 4	End of the Time Band 2 (0÷24)	0	24.00	Hr	10 Min
ES 5	Start of the Time band 3 (0÷24)	0	24.00	Hr	10 Min
ES 6	End of the Time Band 3 (0÷24)	0	24.00	Hr	10 Min
ES 7	Monday: energy saving activated Automatic unit on-off	0 - 0	7 - 7		
ES 8	Tuesday energy saving activated Automatic unit on-off	0 - 0	7 - 7		
ES 9	Wednesday energy saving activated Automatic unit on-off	0 - 0	7 - 7		
ES 10	Thursday energy saving activated Automatic unit on-off	0 - 0	7 - 7		
ES 11	Friday energy saving activated Automatic unit on-off	0 - 0	7 - 7		
ES 12	Saturday energy saving activated Automatic unit on-off	0 - 0	7 - 7		
ES 13	Sunday energy saving activated Automatic unit on-off	0 - 0	7 - 7		
ES 14	Offset for Energy Saving function in chiller mode	-30.0 -54	30.0 54	°C °F	Dec int
ES 15	Differential for Energy Saving function in chiller	0.1 1	25.0 45	°C °F	Dec int
ES 16	Offeset for Energy Saving function in heat pump	-30.0 -54	30.0 54	°C °F	Dec int
ES 17	Differential for Energy Saving in heat pump	0.1 1	25.0 45	°C °F	Dec int
ES 18	Maximum working time of the unit when switched on from keyboard (and the unit is OFF by Energy saving) 0= Not enabled	0	250	Min	10 Min
Pr1	Password	0	999		
Pr2	Password	0	999		
Pr3	Password	0	999		
	Compressors				
Parameters	**Description**	**min**	**max**	**udm**	**Risoluzione**
CO 1	Minimum compressor ON time after the start-up	0	250	10 sec	10 sec
CO 2	Minimum compressor OFF time after the switching off	0	250	10 sec	10 sec
CO 3	ON delay time between two compressors or compressor and valve.	1	250	Sec	
CO 4	OFF delay time between two compressors or compressor and valve	0	250	Sec	
CO 5	Delay time to activate the thermoregulation starting from the power on	0	250	10 Sec	10 sec

Partialization (Capacity Control)					
CO 6	Functioning (see Capacity Control) 0= On/off steps 1= Continuous insertion of the steps and direct action 2= Continuous insertion of the steps and reverse action 3= Continuous insertion of the steps	0	3		
CO 7	Start-up with minimum compressor power / automatic start-unloading valve 0 = Only at the compressor start-up (Minimum power automatic start-unloading valve off) 1= At the compressor start-up and during the termoregulation (Minimum power / automatic start-unloading valve off) 2 = Only at the screw compressor start-up (Minimum power automatic start-unloading valve off) 3= At the compressor start-up and during the termoregulation (Minimum power / Unloading valve ON with compressor off)	0	3		
CO 8	ON time of the intermittent solenoid valve for screw compressor 0= the function is not enabled	0	250	Sec	
CO 9	OFF time of the inetrmittent solenoid valve for screw compressor	0	250	Sec	
Compressor start-up					
CO 10	Compressor start-up selection 0= Direct 1= Part - winding	0	1		
CO 11	Part - winding start-up time. To change the time delay between the activation of two contactors of the two compressor circuits	0	100	Sec/10	0.1 sec
CO 12	By-pass gas valve start-up time / automatic start-unloading valve (capacity step control)	0	250	sec	
Rotating – Balancing – Compressors Thermoregulation					
CO 13	Compressor rotation (See compressor rotation) 0 = Sequential 1 = Compressors rotation based on time running hours 2 = Compressors rotation based on number of starts-up	0	2		
CO 14	Circuit balancing (See Circuit balancing) 0= Circuit saturation 1= Circuit balancing	0	1		
Evaporator water pump / supply fan					
CO 15	Operative mode of the evaporator pump / supply fan 0= Not enabled (evaporator pump or supply fan). 1= ON/OFF: continuous operation type 1 When the unit is running in Chiller or Heat Pump the pump or the supply fan is running. In std-by or remote OFF mode, the pump is OFF. 2= ON/OFF: on if called by compressor When a compressor is running, the pump or the supply fan is running. 3= ON/OFF: continuous operation type 2 When the unit is running in Chiller or Heat Pump or in STD-By or in OFF, the pump or the supply fan is running. 4= Modulation: continuous operation type 1 When the unit is running in Chiller or Heat Pump the pump or the supply fan is running. In std-by or remote OFF mode, the pump is OFF. 5= Modulation: on if called by compressor When a compressor is running, the pump or the supply fan is running. 6= Modulation: continuous operation type 2 When the unit is running in Chiller or Heat Pump or in STD-By or in OFF, the pump or the supply fan is running.	0	6		
CO 16	ON compressor delay after water pump / supply fan start-up	1	250	10 sec	10 sec
CO 17	OFF delay evaporator water pump / supply fan after compressor switching OFF. This delay is also active when the unit is turned in stand-by	0	250	Min	
CO 18	Number of running hours for evaporator pump rotation	0	999	10Hr	10Hr
CO 19	Contemporary working time of the pumps during rotation	0	250	Sec	
Condenser water pump					

CO 20	Operative mode of the condenser pump 0= Not enabled 1= ON/OFF: continuous operation type 1 When the unit is running in Chiller or Heat Pump the pump is running. In std-by or remote OFF mode, the pump is OFF. 2= ON/OFF: on if called by compressor When a compressor is running, the pump is running. 3= ON/OFF: continuous operation type 2 When the unit is running in Chiller or Heat Pump or in STD-By or in OFF, the pump is running. 4= Modulation: continuous operation type 1 When the unit is running in Chiller or Heat Pump the pump is running. In std-by or remote OFF mode, the pump is OFF. 5= Modulation: on if called by compressor When a compressor is running, the pump is running. 6= Modulation: continuous operation type 2 When the unit is running in Chiller or Heat Pump or in STD-By or in OFF, the pump is running.	0	6		
CO 21	Delay time to switch off the pump starting from compressor deactivation or when the unit is placed in std-by	0	250	Min	
CO 22	Number of running hours for condenser pump rotation	0	999	10Hr	10Hr
CO 23	Contemporary working time of the pumps during rotation	0	250	Sec	
	Load maintenance				
CO 24	Compressor 1: number of working hour to signalling maintenance warning	0	999	10 Hr	10 Hr
CO 25	Compressor 2: number of working hour to signalling maintenance warning	0	999	10 Hr	10 Hr
CO 26	Evaporator pump / supply fan: number of working hour to signalling maintenance warning	0	999	10 Hr	10 Hr
CO 27	Support evaporator pump / supply fan: number of working hour to signalling maintenance warning	0	999	10 Hr	10 Hr
CO 28	Condenser pump: number of working hour to signalling maintenance warning	0	999	10 Hr	10 Hr
CO 29	Support condenser pump: number of working hour to signalling maintenance warning	0	999	10 Hr	10 Hr
	Pump down				
CO 30	Pump down operating mode (See pump down ON/OFF function) 0= Not enabled 1= Pump down enabled only during the switching off 2= Pump down enabled during the switching off and switching on 3= in Chiller mode pump down enabled only during the switching off 4= in Chiller mode pump down enabled during the switching off and switching on	0	4		
CO 31	Pump–down pressure setpoint (See pump down ON/OFF function)	0 0	50.0 725	Bar psi	Dec int
CO 32	Pump-down pressure differential (See pump down ON/OFF function)	0 0	14.0 203	Bar psi	Dec int
CO 33	Maximum pump–down time duration at start-up and stop (See pump down ON/OFF function)	0	250	Sec	
	Evaporator Unloading				
CO 34	Unloading compressor setpoint in chiller to prevent high temperature of the evaporator water inlet (See unloading function).	-50 -58	70.0 158	°C °F	Dec int
CO 35	Unloading Differential. From high temperature of the evaporator water inlet (See unloading function).	0.1 1	25.0 45	°C °F	Dec int
CO 36	Delay time to engage the Unloading function from high temperature of the evaporator water inlet (See unloading function).	0	250	Sec	10sec
CO 37	Maximum unloading duration time to keep activated the Unloading function from high temperature of the evaporator water inlet (See unloading function).	0	250	Min	
CO 38	Unloading compressor setpoint in chiller to prevent low temperature of the evaporator water inlet (See unloading function).	-50 -58	70.0 158	°C °F	Dec int
CO 39	Unloading Differential to prevent low temperature of the evaporator water inlet (See unloading function).	0.1 1	25.0 45	°C °F	Dec int
CO 40	Maximum unloading duration time to keep activated the Unloading function from low temperature of the evaporator water inlet (See unloading function).	0	250	Min	
	Condenser Unloading				
CO 41	Unloading compressor setpoint. From temperature / pressure in chiller mode (See unloading function).	0 0	50.0 725	Bar psi	Dec int
CO 42	Unloading Differential. From temperature / pressure in chiller mode (See unloading function).	0.0 0	14.0 203	Bar Psi	Dec int
CO 43	Unloading compressor setpoint. From temperature / pressure in HP mode (See unloading function).	0 0	50.0 725	Bar psi	Dec int
CO 44	Unloading Differential. From temperature / pressure in HP mode (See unloading function).	0.0 0	14.0 203	Bar Psi	Dec int
CO 45	Maximum unloading duration time from temperature/pressure control.	0	250	Min	
CO 46	Number of steps for circuit with active unloading 1= 1st step 2= 2nd step 3= 3rd step	1	3		

CO 47	Minimum ON time of the capacity step after the unloading function start (only for capacity compressor)	0	250	Sec	
	Compressor liquid injection				
CO 48	Setpoint of the solenoid valve (on) of the liquid injection	0 32	150 302	°C °F	Dec / int int
CO 49	Setpoint of the solenoid valve (off) of the liquid injection	0.1 1	25.0 45	°C °F	Dec int
	Load management in neutral zone				
CO 50	Maximum working time in neutral zone without steps insertion	0	250	Min	10 Min
CO 51	Maximum working time in neutral zone without steps rotation	0	999	Hr	1Hr
	Pump down to time				
CO 52	Maximum time for the activation of the pump-down during the switching off CO58 = 0 Not enabled	0	250	Sec	
CO 53	Maximum time for the activation of the pump-down during the switching on CO59 = 0 Not enabled	0	250	Sec	
	Compressor inverter controlled				
CO 54	Time at maximum speed during compressor start up	0	250	sec	
CO 55	Minimum value of the proportional output at compressor start up	0	100	%	
CO 56	Minimum interval time of the capacity variation at compressor start up	1	250	sec	
CO 57	Value under wich starts counting time CO58	0	100	%	
CO 58	Maximum working time of the compressor with percentage lower than CO57	0	250	Min	10 Min
CO 59	Time of forcing the compressor digital scroll to the maximum power	0	250	sec	10sec
CO 60	Maximum working time for compressors rotation	0	999	Hr	1Hr
CO 61	Minimum value of the proportional output digital scroll 0÷10V compressor 1	0	CO62	%	
CO 62	Maximum value of the proportional output digital scroll 0÷10V compressor 1	CO61	100	%	
CO 63	Minimum value of the proportional output digital scroll 0÷10V compressor 2	0	CO64	%	
CO 64	Maximum value of the proportional output digital scroll 0÷10V compressor 2	CO63	100	%	
CO 65	Minimum interval time of the capacity variation	1	250	sec	
	Tandem function				
CO 66	Maximum working time for compressors rotation	0	250	Min	
	Solenoid valve water side				
CO 67	Delay time for compressor activation starting from solenoid valve activation	0	250	Min	
CO 68	Delay time for solenoid valve deactivation starting from compressor deactivation	0	250	Min	
	Unbalanced compressors				
CO 69	Compressor 1 weight	0	100	%	
CO 70	Compressor 2 weight	0	100	%	
CO 71	Maximum numbers of start up per hour 0= function disabled	0	60		
	Modulating evaporator water pump				
CO 72	Probe selection (Pb1..Pb6) for modulating evaporator water pump in chiller	0	6		
CO 73	Probe selection (Pb1..Pb6) for modulating evaporator water pump in heat pump	0	6		
CO 74	Set point for modulating evaporator water pump in chiller	-50.0 -58 0 0	70.0 158 50.0 725	°C °F Bar Psi	Dec Int Dec int
CO 75	Proportional band for modulating evaporator water pump in chiller	0.1 1 0.1 1	25.0 45 14.0 203	°C °F Bar Psi	Dec Int Dec int
CO 76	Set point for modulating evaporator water pump in heat pump	-50.0 -58 0 0	70.0 158 50.0 725	°C °F Bar Psi	Dec Int Dec int
CO 77	Proportional band for modulating evaporator water pump in heat pump	0.1 1 0.1 1	25.0 45 14.0 203	°C °F Bar Psi	Dec Int Dec int
CO 78	Minimun value of the signal for the modulation of the pump	0	CO 79	%	
CO 79	Maximun value of the signal for the modulation of the pump	CO 78	100	%	
CO 80	Time at maximum speed when the pump is activated	0	250	sec	
CO 81	Value of the signal when the compressor is OFF or when the unit is in STD-BY or remote OFF	0	100	%	

CO 82	Time at maximum speed during the switching off of the pump	0	250	sec	
	Modulating condenser water pump				
CO 83	Probe selection (Pb1..Pb6) for modulating condenser water pump in chiller	0	6		
CO 84	Probe selection (Pb1..Pb6) for modulating condenser water pump in heat pump	0	6		
CO 85	Set point for modulating condenser water pump in chiller	-50.0 -58 0 0	70.0 158 50.0 725	°C Int Dec int	
CO 86	Proportional band for modulating condenser water pump in chiller	0.1 1 0.1 1	25.0 45 14.0 203	°C Int Dec int	
CO 87	Set point for modulating condenser water pump in heat pump	-50.0 -58 0 0	70.0 158 50.0 725	°C Int Dec int	
CO 88	Proportional band for modulating condenser water pump in heat pump	0.1 1 0.1 1	25.0 45 14.0 203	°C Int Dec int	
CO 89	Minimun value of the signal for the modulation of the pump	0	CO90	%	
CO 90	Maximun value of the signal for the modulation of the pump	CO89	100	%	
CO 91	Time at maximum speed when the pump is activated	0	250	sec	
CO 92	Value of the signal when the compressor is OFF or when the unit is in STD-BY or remote OFF	0	100	%	
CO 93	Time at maximum speed during the switching off of the pump	0	250	sec	
Pr1	Password	0	999		
Pr2	Password	0	999		
Pr3	Password	0	999		
	Auxiliary relay				
Parameters	**Description**	**min**	**max**	**M. U.**	**Resolution**
	Auxiliary relay of the circuit 1				
US 1	Auxiliary relay 1 operating mode 0= Not enabled 1= Always available with direct action 2= Available only when the unit is on with direct action 3= Always available with reverse action 4= Available only when the unit is on with reverse action	0	4		
US 2	Probe selection for auxiliary relay 1 control. Allows to select which probe Pb1..Pb6 controls the relay	1	6		
US 3	Auxiliary relay 1 setpoint	-50.0 -58 0.0 0	70.0 158 50.0 725	°C °F Bar Psi	Dec int Dec int
US 4	Auxiliary relay 1 differential	0.1 1 0.0 0	25.0 45 14.0 203	°C °F Bar Psi	Dec int Dec int
	Auxiliary relay circuit 2				
US 5	Auxiliary relay 2 operating mode 0= Not enabled 1= Always available with direct action 2= Available only when the unit is on with direct action 3= Always available with reverse action 4= Available only when the unit is on with reverse action	0	4		
US 6	Probe selection for for auxiliary relay 2 control. Allows to select which probe value Pb1..Pb6 controls the relay	1	6		
US 7	Auxiliary relay 2 setpoint	-50.0 -58 0.0 0	70.0 158 50.0 725	°C °F Bar Psi	Dec int Dec int
US 8	Auxiliary relay 2 differential	0.1 1 0.0 0	25.0 45 14.0 203	°C °F Bar Psi	Dec int Dec int
	Auxiliary proportional output n° 1				
US 9	Auxiliary proportional output n° 1 operating mode 0= Not enabled 1= Always available with direct action 2= Available only when the unit is on with direct action 3= Always available with reverse action 4= Available only when the unit is on with reverse action	0	4		
US 10	Probe selection for auxiliary proportional output 1 Allows to select which probe value Pb1..Pb6 controls output	1	6		

US 11	Minimum value of the auxiliary proportional output 1	0	US12	%	
US 12	Maximum value of the auxiliary proportional output 1	US11	100	%	
US 13	Auxiliary proportional output 1 setpoint	-50.0 -58 0.0 0	70.0 158 50.0 725	°C °F Bar Psi	Dec int Dec int
US 14	Auxiliary proportional output 1 differential	0.1 1 0.0 0	25.0 45 14.0 203	°C °F Bar Psi	Dec int Dec int
Auxiliary proportional output n° 2					
US 15	Auxiliary proportional output n° 2 operating mode 0= Not enabled 1= Always available with direct action 2= Available only when the unit is on with direct action 3= Always available with reverse action 4= Available only when the unit is on with reverse action	0	4		
US 16	Probe selection for auxiliary proportional output 2 Allows to select which probe value Pb1..Pb10 controls output	1	6		
US 17	Minimum value proportional output 2	0	US18	%	
US 18	Maximum value proportional output 2	US17	100	%	
US 19	Auxiliary setpoint proportional output 2	-50.0 -58 0.0 0	70.0 158 50.0 725	°C °F Bar Psi	Dec int Dec int
US 20	Differenzential proportional output 2	0.1 1 0.0 0	25.0 45 14.0 203	°C °F Bar Psi	Dec int Dec int
Geothermal function					
US 21	Geothermal function activation 0= only in chiller 1= only in heat pump 2= chiller and heat pump	0	2		
US 22	Temperature to activate geothermal function	0.1 1 0.0 0	25.0 45 14.0 203	°C °F Bar Psi	Dec int Dec int
US 23	Differential to deactivate geothermal function	0.1 1 0.0 0	25.0 45 14.0 203	°C °F Bar Psi	Dec int Dec int
US 24	Time to activate/deactivate geothermal function	0	250	sec	
US 25	Probe 1 selection (Pb1..Pb6) for geothermal function	0	6		
US 26	Probe 2 selection (Pb1..Pb6) for geothermal function	0	6		
US 27	Probes configuration for geothermal function 0= Probe 1 for geothermal function – probe 2 for geothermal function 1= Probe 2 for geothermal function – probe 1 for geothermal function	0	1		
US 28	Geothermal function set point	-50.0 -58 0 0	70.0 158 50.0 725	°C °F Bar Psi	Dec int Dec int
US 29	Geothermal function differential	0.1 1 0.0 0	25.0 45 14.0 203	°C °F Bar Psi	Dec int Dec int
US 30	Direct / reverse action for geothermal function 0= direct action 1= reverse action	0	1		
US 31	Minimum value for geothermal function	0	US32	%	
US 32	Maximum value for geothermal function	US31	100	%	
Pr1	Password	0	999		
Pr2	Password	0	999		
Pr3	Password	0	999		
Condenser fan					
Parameters	**Description**	**min**	**max**	**M. U.**	**Resolution**

FA 1	Fan configuration output 0 = Not enabled 1 = Always on 2 = ON/OFF regulation with steps 3 = ON/OFF Continuous regulation 4 = Proportional speed control	0	4		
FA 2	Fan operating mode 0= Dependent from the compressor 1= Independent from the compressor	0	1		
FA 3	Operation time at maximun speed when the fans start	0	250	Sec	
FA 4	Phase shifting of the fan motor	0	8	Micro Sec	250µs
FA 5	Number of condensing circuits 0= one condenser circuit 1= two condenser circuits	0	1		
FA 6	Pre-ventilation time before turning on the compressor in chiller mode	0	250	Sec	
	Fan in Chiller mode				
FA 7	Minimum speed for condenser fan in Chiller mode. To set the minimum fan speed percentage value (30..100%), it is related to the fan power supply.	30	100	%	
FA 8	Maximum speed for condenser fan in Chiller mode. To set the maximim fan speed percentage value (30..100%), it is related to the fan power supply.	30	100	%	
FA 9	**Proportional speed control FA01 = 4** Temperature or pressure limit to enable the minimum speed FA 7 **ON/OFF regulation FA01 = 2 / 3** SETpoint step n° 1	-50.0 -58 0.0 0	70.0 158 50.0 725	°C °F Bar Psi	Dec int Dec int
FA 10	**Proportional speed control FA01 = 4** Temperature or pressure limit to enable the maximum speed FA 8 **ON/OFF regulation FA01 = 2 / 3** SETpoint step n° 2	-50.0 -58 0.0 0	70.0 158 50.0 725	°C °F Bar Psi	Dec int Dec int
FA 11	**Proportional speed control FA01 = 4** Proportional band for condenser fan control in chiller To set the temperature/pressure differential between the minimum and the maximum of the fan speed regulation. **ON/OFF regulation FA01 = 2 / 3** Differential step circuit n° 1	0.1 1 0.0 0	25.0 45 14.0 203	°C °F Bar Psi	Dec int Dec int
FA 12	**Proportional speed control FA01 = 4** CUT-OFF differential in chiller. To set a temperature/pressure differential to stop the fan. **ON/OFF regulation FA01 = 2 / 3** Differential step circuit n° 2	0.1 1 0.0 0	25.0 45 14.0 203	°C °F Bar Psi	Dec int Dec int
FA 13	Over ride CUT- OFF in chiller. To set a temperature/pressure differential to keep the minimum fan speed.	0.1 1 0.0 0	25.0 45 14.0 203	°C °F Bar Psi	Dec int Dec int
FA 14	CUT-OFF time delay. To set a time delay before activating the CUT-OFF function after the fan start-up. If after the compressor start-up the proportional regulator requires to turn off the fan (cut-off) and FA14≠0, the fan is on at the minimum speed for the time set in this parameter. If FA14=0 the function is disabled.	0	250	Sec	
FA 15	Night speed in chiller. To set the maximum fan speed percentage value (30..100%), it is related to the fan power supply.	30	100	%	
	Fan in Heat pump mode				
FA 16	Minimum speed for condenser fan in Heat Pump mode. To set the minimum fan speed percentage value (30..100%), it is related to the fan power supply.	30	100	%	
FA 17	Maximum speed for condenser fan in Heat Pump mode. To set the maximum fan speed percentage value (30..100%), it is related to the fan power supply.	30	100	%	
FA 18	**Proportional speed control FA01 = 4** Temperature or pressure limit to enable the minimum speed FA16 **ON/OFF regulation FA01 = 2/3** SETpoint step n° 1	-50.0 -58 0.0 0	70.0 158 50.0 725	°C °F Bar Psi	Dec int Dec int
FA 19	**Proportional speed control FA01 = 4** Temperature or pressure limit to enable the maximum speed FA17 **ON/OFF regulation FA01 = 2/3** SETpoint step n° 2	-50.0 -58 0.0 0	70.0 158 50.0 725	°C °F Bar Psi	Dec int Dec int
FA 20	**Proportional speed control FA01 = 4** Proportional band for condenser fan control in heat pump To set the temperature/pressure differential between the minimum and the maximum of the fan speed regulation. **ON/OFF regulation FA01 = 2/3** Differential step circuit n° 1	0.1 1 0.0 0	25.0 45 14.0 203	°C °F Bar Psi	Dec int Dec int

FA 21	**Proportional speed control FA01 = 4** CUT-OFF differential in heat pump. To set a temperature/pressure differential to stop the fan. **ON/OFF regulation FA01 = 2/3** Differential step circuit n° 2	0.1 1 0.0 0	25.0 45 14.0 203	°C °F Bar Psi	Dec int Dec int
FA 22	Over ride CUT- OFF in Heat pump. To set a temperature/pressure differential to keep the minimum fan speed.	0.1 1 0.0 0	25.0 45 14.0 203	°C °F Bar Psi	Dec int Dec int
FA 23	Night speed in Heat pump. To set the maximum fan speed percentage value (30..100%), it is related to the fan power supply.	30	100	%	
	Hot start				
FA 24	Hot start setpoint	50.0 -58	70.0 158	°C °F	Dec int
FA 25	Hot start differential	0.0 0	25.0 45	°C °F	Dec int
	3 step condenser Fan in Chiller mode				
FA 26	**ON/OFF regulation FA01 = 2/3** SETpoint step n° 3	50.0 -58 0.0 0	70.0 158 50.0 725	°C °F Bar Psi	Dec int Dec int
	3 4 step condenser Fan in heat pump				
FA 27	**ON/OFF regulation FA01 = 2/3** SETpoint step n° 3	50.0 -58 0.0 0	70.0 158 50.0 725	°C °F Bar Psi	Dec int Dec int
Pr1	Password	0	999		
Pr2	Password	0	999		
Pr3	Password	0	999		
	Antifreeze heaters – Integration heating - boiler				
Parameter	**Description**	**min**	**max**	**m. u.**	**Risoluzione**
Ar 1	Anti-freeze heaters/integration heating setpoint for air/air unit in Chiller mode. To set a temperature value, below this value the anti-freeze relay is activated.	50.0 -58	70.0 158	°C °F	Dec int
Ar 2	Regulation band for antifreeze in Chiller mode.	0.1 0	25.0 45	°C °F	Dec Int
Ar 3	Set Anti-freeze heaters/integration heating setpoint for air/air unit in HP mode. To set a temperature value, below this value the anti-freeze relay is activated.	50.0 -58	70.0 158	°C °F	Dec int
Ar 4	Regulation band for antifreeze in Heat Pump mode	0.1 0	25.0 45	°C °F	Dec int
Ar 5	Antifreeze heaters / integration heating in defrost 0= ON only with thermoregulation control 1= ON with thermoregulation and during the defrosting cycle	0	1		
Ar 6	Probe selection for antifreeze heaters / integration heating in Chiller mode 0= Not enabled 1= Evaporator inlet 2= Evaporator outlet 1 and 2 3= Evaporator outlet 1 and 2 and common outlet	0	3		
Ar 7	Probe selection for antifreeze heaters / integration heating in Heat Pump mode 0= Not enabled 1= Evaporator inlet. 2= Evaporator outlet 1 and 2. 3= Evaporator outlet 1 and 2 and common outlet.	0	3		
Ar 8	Thermoregulation probe for anti-freeze / condenser heaters. 0= not enabled. 1= Condenser common water inlet probe. 2= Condenser common water inlet and condenser inlet 1 / 2 probe. 3= Condenser water outlet 1 / 2 probe. 4= Condenser water outlet 1 / 2 and common outlet.	0	4		
Ar 9	Anti-freeze heaters control with unit in remote OFF or stand-by mode: 0= Control not enable 1=Controlled by anti-freeze thermoregulation.	0	1		
Ar 10	Anti-freeze heaters control for condenser/evaporator faulty probe: 0= Anti-freeze heaters OFF 1= Anti-freeze heaters ON	0	1		
	Boiler function				
Ar 11	Boiler function 0=Not enabled 1=Enabled for integration heating 2= Enabled for heating	0	2		
Ar 12	External air temperaure setpoint for boiler heaters	-50.0 -58	70.0 158	°C °F	Dec int
Ar 13	Temperature differential for boiler heaters	0 0	25.0 45	°C °F	Dec int

Ar 14	Time delay before turning the boiler on	0	250		Min
	Boiler function in Chiller mode				
Ar 15	Setpoint for boiler heaters in chiller	50.0 -58	70.0 158	°C °F	Dec int
Ar 16	Proportional band for boiler heaters in chiller	0.1 0	25.0 45	°C °F	Dec int
	Boiler function in heat pump				
Ar 17	Setpoint for boiler heaters in Heat Pump	50.0 -58	70.0 158	°C °F	Dec int
Ar 18	Proportional band for boiler heaters in Heat Pump	0.1 0	25.0 45	°C °F	Dec int
Ar 19	External air setpoint to stop the compressor as integration function	50.0 -58	70.0 158	°C °F	Dec int
Ar 20	External air differential to stop the compressor as integration function	0.1 0	25.0 45	°C °F	Dec int
	Water pumps on OFF or STD-BY				
Ar 21	Water pump in OFF/ stand-by 0= Aways in OFF 1= ON only with antifreeze thermoregulation control	0	1		
Ar 22	Termoregulation probe water pump in antifreeze mode 0= Not enabled 1= Evaporator inlet 2= Evaporator outlet 1 and 2 3= Evaporator outlet 1 and 2 and common outlet 4= External temperature	0	4		
Ar 23	Set point for water pump activation	-50.0 -58	70.0 158	°C °F	Dec int
Ar 24	Differential for water pump deactivation	0.1 1	25.0 45	°C °F	Dec int
Pr1	Password	0	999		
Pr2	Password	0	999		
Pr3	Password	0	999		
	Defrost				
Parameter	**Description**	**min**	**max**	**udm**	**Risoluzione**
dF 1	Defrost configuration: 0= Not enabled 1= Temperature / pressure 2= start depends on par. dF24 stop for time duration 3= start depends on par. dF24 stop for external contact 4= defrost with condenser fan	0	4		
dF 2	Temperature or pressure of the defrost start-up	-50.0 -58 0.0 0	70.0 158 50.0 725	°C °F bar psi	Dec int Dec Int
dF 3	Temperature or pressure of the defrost stop	-50.0 -58 0.0 0	70.0 158 50.0 725	°C °F bar psi	Dec int Dec Int
dF 4	Minimum defrost duration	0	250	Sec	
dF 5	Maximum defrost duration	1	250	Min	
dF 6	Time delay between the defrost of two circuits	0	250	Min	
dF 7	OFF compressor delay before the defrost	0	250	Sec	
dF 8	OFF compressor delay after the defrost	0	250	Sec	
dF 9	Defrost interval time of the same circuit	1	99	Min	
dF 10	Temperature setpoint for combined defrost of the 1st circuit after parameter DF10 counting	-50.0 -58	70.0 158	°C °F	Dec int
dF 11	Temperature setpoint for combined defrost end of the 1st circuit.	-50.0 -58	70.0 158	°C °F	Dec int
dF 12	Temperature setpoint for combined defrost of the 2nd circuit after parameter DF10 counting	-50.0 -58	70.0 158	°C °F	Dec int
dF 13	Temperature setpoint for combined defrost end of the 2nd circuit	-50.0 -58	70.0 158	°C °F	Dec int
dF 14	Activation of all the steps of the 1st circuit during the defrost 0= Not enabled 1= Enabled	0	1		
dF 15	Activation of all the steps of the 2nd circuit during the defrost 0= Not enabled 1= Enabled	0	1		
dF 16	Delay between two compressor activation in defrost (compressors of the same circuit)	0	250	Sec	
dF 17	Fan control during defrost / dripping time 0= Not enabled 1= Only in defrost 2= For both functions defrost / dripping time	0	2		

dF 18	Pressure / temperature setpoint to force the ventilation ON during the defrost.	-50.0 -58 0.0 0	70.0 158 50.0 725	°C °F bar psi	Dec int Dec Int
	Forced defrost				
dF 19	Minimum time delay before a forced defrost	0	250	sec	
dF 20	Pressure / temperature setpoint for a forced defrost	-50.0 -58 0.0 0	70.0 158 50.0 725	°C °F bar psi	Dec int Dec int
dF 21	Forced defrost differential	0.1 1 0.0 0	25.0 45 14.0 203	°C °F Bar Psi	Dec int Dec int
	Defrost operative mode				
dF 22	Defrost start-up in unit with 2 circuits 0= Independent 1= If both have reached the necessary requirements 2= If one has reached the necessary requirements	0	2		
dF 23	End defrost in unit with 2 circuits and common ventilation 0= Independent 1= If both have reached the necessary end defrost requirements 2= If one has reached the necessary end defrost requirements	0	2		
	Start / stop defrost from analog input				
Parameters	**description**	**min**	**max**	**udm**	**resolution**
dF 24	Start / stop defrost probe 0= start and stop with condenser temperature / pressure probe 1= start with evaporator pressure probe / stop with condenser temperature / pressure probe 2= start with condenser temperature / pressure probe / stop with evaporator pressure probe 3= start and stop with evaporator pressure probe	0	3		
	Supply fan functioning during defrost cycle				
dF 25	Set point to enable defrost with condenser fan	-50.0 -58	70.0 158	°C °F	Dec int
	Defrost with condenser fan				
dF 26	Supply fan status during the defrost cycle 0= Enabled 1= Not enabled	0	1		
	Minimum temperature water outlet during defrost				
dF 27	Probe selection for minimum temperature outlet during defrost	0	6		
dF 28	Set point for minimum temperature outlet during defrost	-50.0 -58 0.0 0	70.0 158 50.0 725	°C °F bar psi	Dec int Dec int
Pr1	Password	0	999		
Pr2	Password	0	999		
Pr3	Password	0	999		
	Alarms				
Parameters	**Description**	**min**	**max**	**m. u.**	**Resolution**
	Low alarm				
AL 1	Low pressure alarm delay from analog and digital input	0	250	Sec	
AL 2	Low pressure alarm delay if the low pressure switch is used for the pump down. AL02= 0 low pressure alarm not enable during compressor switching off from pump down and if compressor OFF AL02≠ 0 low pressure alarm enable after AL02 (starting from compressor switch off) time with compressor OFF	0	250	Sec	10 Sec
AL 3	Low pressure alarm setpoint from analogue input	-50.0 -58 0.0 0	70.0 158 50.0 725	°C °F bar psi	Dec int Dec int
AL 4	Low pressure alarm differential from analogue input	0.1 1 0.0 0	25.0 45 14.0 203	°C °F bar psi	Dec int Dec Int
AL 5	Maximum number of low pressure events from digital/analogue inputs: Always manual reset if AL05 = 0 Always automatic reset if AL05 =16 From automatic to manual reset if AL05= 1..15	0	16		
AL 6	Low temperature/pressure alarm during defrost 0= Not enabled 1= Enabled	0	1		
AL 7	Low temperature/pressure alarm delay during defrost	0	250	Sec	

AL 8	Low temperature/pressure alarm with unit in OFF or stand – by: 0 = Not enabled 1= Alarm enabled	0	1		
	High Alarm				
AL 9	High temperature/pressure alarm from analogue input	-50.0 -58 0.0 0	70.0 158 50.0 725	°C °F bar psi	Dec int Dec int
AL 10	High temperature/pressure alarm differential from analogue input	0.1 1 0.0 0	25.0 45 14.0 203	°C °F bar psi	Dec int Dec int
	Oil Alarm				
AL 11	Low oil pressure / level delay from digital input	0	250	Sec	
AL 12	Minimum time for low oil pressure / level from digital input activation in normal working condition.	0	250	Sec	
AL 13	Maximum number of low oil pressure/level events: Always manual reset if AL13= 0 Always automatic reset if AL13 =16 From automatic to manual reset if AL13 = 1..15	0	16		
AL 14	Low oil pressure / oil level when the compressor is OFF 0= alarm disabled 1= alarm enabled	0	1		
	Condenser Flow alarm				
AL 15	Condenser water flow configuration 0= Not enabled 1= Enabled only in chiller mode 2= Enabled only in heat pump mode 3= Enabled in chiller and heat pump mode	0	3		
AL 16	Condenser flow switch delay after pump activation	0	250	Sec	
AL 17	Flow switch activation time to generate the manual condenser flow alarm	0	250	Sec	
AL 18	Flow switch activation time to generate the automatic condenser flow alarm	0	250	Sec	
AL 19	Flow switch deactivation time to reset the condenser flow alarm	0	250	Sec	
	Evaporator Flow alarm				
AL 20	“Evaporator flow switch / supply fan overload” delay after pump activation	0	250	Sec	
AL 21	Flow switch activation time to generate the manual evaporator flow alarm	0	250	Sec	
AL 22	“Evaporator flow switch / supply fan overload” activation time to generate the automatic alarm	0	250	Sec	
AL 23	“Evaporator flow switch / supply fan overload” deactivation time to reset the alarm	0	250	Sec	
	Compressor overload alarm				
AL 24	Compressor overload alarm delay after compressor start-up	0	250	Sec	
AL 25	Maximum number of compressor overload alarm per hour Always manual reset if AL20 = 0 Always automatic reset if AL20 =16 From automatic to manual reset if AL20 =1..15	0	16		
AL 26	Enable compressor overload if compressor is deactivated 0= compressor overload alarm disabled 1= compressor overload alarm enabled	0	1		
AL 27	Compressor overload alarm operation 0= swith off only the compressor 1= switch off the circuit	0	1		
	Pump down alarm				
AL 28	Maximum number of pump down alarm events per hour in stop condition. After this number the alarm is logged, displayed and signalled with alarm relay + buzzer. Always manual reset if AL28 = 0 Always automatic reset if AL28 =16 From automatic to manual reset if AL28 =1..15	0	16		
AL 29	Maximum number of pump down alarm events per hour in start-up condition. After this number the alarm is logged, displayed and signalled with alarm relay + buzzer. Always manual reset if AL29 = 0 Always automatic reset if AL29 =16 From automatic to manual reset if AL29 =1..15 and parameter AL30 config.	0	16		
AL 30	Select if the pump down alarm must change from automatic to manual reset: 0= Always automatic reset 1= Manual reset after AL29 alarm events	0	1		
	Anti-freeze alarm in Chiller mode				
AL 31	Minimum antifreeze setpoint in chiller	-50.0 -22	AL32	°C °F	Dec int
AL 32	Maximum antifreeze setpoint in chiller	AL31	70.0 158	°C °F	Dec int

AL 33	"Antifreeze / low ambient temperature (air / air unit) / low temperature air outlet (air/air)" alarm setpoint temperature	AL31	AL32	°C/°F	Dec/int
AL 34	"Antifreeze / low ambient temperature (air / air unit) / low temperature air outlet (air/air)" alarm differential temperature	0.1 1	25.0 45	°C °F	Dec int
AL 35	Alarm delay for anti-freeze, low ambient air temperature or low outlet air temperature	0	250	Sec	
AL 36	Maximum number anti-freeze, low ambient air temperature or low outlet air temperature alarm in chiller Always manual reset if AL36 = 0 Always automatic reset if AL36 = 16 From automatic to manual if AL36 = 1. .15	0	16		
AL 37	Anti-freeze alarm configuration in chiller 0= when the antifreeze alarm is activated the compressors are switched off; the display shows the alarm label, the buzzer and alarm relay are not activated 1= when the antifreeze alarm is activated the compressors are switched off; the display shows the alarm label, the buzzer and alarm relay are activated, the antifreeze heathers are acivated	0	1		
AL 38	Probe selection for antifreeze alarm in chiller mode 0= disabled 1= evaporator inlet temperature 2= evaporator 1 / 2 outlet temperature 3= evaporator 1 / 2 outlet temperature and common outlet temperature 4= external air temperature	0	4		
AL 39	Probe selection for condenser antifreeze alarm 0= disabled 1= condenser common inlet temperature 2= condenser 1 / 2 inlet temperature and common inlet temperature 3= condenser 1 / 2 outlet temperature 4= condenser 1 / 2 outlet temperature and common outlet temperature	0	4		
Anti-freeze alarm in Heat pump mode					
AL 40	Minimum limit of the setpoint in heat pump mode	-50.0 -58	AL39	°C °F	Dec int
AL 41	Maximum limit of the setpoint in heat pump mode	AL38	70.0 158	°C °F	Dec int
AL 42	Anti-freeze alarm setpoint in heat pump Setpoint temperature for low anti-freeze alarm, low ambient temperature (air/air), low temperature air outlet (air/air)	AL31	AL32	°C/°F	Dec/int
AL 43	Differential of anti freeze alarm in heat pump mode. To reset the anti-freeze, low ambient Temperature (air/air), low temperature air outlet (air/air) alarms.	0.1 1	25.0 45	°C °F	Dec int
AL 44	Antifreeze alarm delay (low outlet temperature for air/air unit) at the stert up in heat pump mode	0	250	Sec	
AL 45	Anti-freeze alarm delay for low air ambient temperature or low outlet air temperature in heat pump normal condition.	0	250	Sec	
AL 46	Maximum number of anti-freeze alarm events for low air ambient temperature or low outlet air temperature in heat pump. It sets the alarm reset condition: Always manual reset AL46 = 0 Always automatic reset AL46 = 16 From automatic to manual reset if AL46 = 1..15	0	16		
AL 47	Anti-freeze alarm configuration in heat pump 0= to turn the compressors off when the anti-freeze control probe is lower than AL33 (after the time delay), the display shows the alarm label. Buzzer and Alarm relay are not activated. 1= to turn the compressors off when the anti-freeze control probe is lower than AL33 (after the time delay), the display shows the alarm label. Buzzer and Alarm relay are activated.	0	1		
AL 48	Probe selection for antifreeze alarm in heat pump mode 0= disabled 1= evaporator inlet temperature 2= evaporator 1 / 2 outlet temperature 3= evaporator 1 / 2 outlet temperature and common outlet temperature 4= external air temperature	0	4		
Compressor high discharge temperature					
AL 49	Compressor high discharge temperature setpoint	0 0	150 302	°C °F	Dec / int int
AL 50	Compressor high discharge temperature differential	0 0	25.0 45	°C °F	Dec int
AL 51	Number of compressor high discharge temperature events per hour to determine the alarm reset condition: Always manual reset if AL51 = 0 Always automatic reset if AL51 =16 From automatic to manual if AL51 = 1..15	0	16		
Generic alarm 1					

AL 52	Maximum number of generic alarm events (each event stop the regulation) before turning the alarm from automatic to manual: Always manual AL52 = 0 Always automatic AL52 =16 From manual to utomatic if AL52 value is between 1 and 15	0	16		
AL 53	Generic alarm delay time after the digital input activation	0	250	Sec	
AL 54	Generic alarm delay time after the digital input is not activate	0	250	10 sec	10 sec
	Generic alarm / signal 2				
AL 55	Functioning generic alarm n° 2 0= only signal always automatic reset 1= the alarm block the unit reset depends on the value of parameter AL56	0	1		
AL 56	Maximum number of generic alarm events before turning the alarm from automatic to manual: Always manual AL56 = 0 Always automatic AL56 =16 From manual to utomatic if AL56 value is between 1 and 15	0	16		
AL 57	Generic alarm delay time after the digital input activation	0	250	Sec	
AL 58	Generic alarm delay time after the digital input is not activate	0	250	Sec	10 sec
	Alarm relay				
AL 59	Enable alarm relay with unit in off or stand – by: 0= Alarm output not enabled 1= Alarm output enabled	0	1		
	Password reset: Alarm log – Compressor overload				
AL 60	Password value to reset the alarm log or the compressor overload alarm.	0	999		
	Reset High pressure / temperature alarm				
AL 61	Maximum number of high pressure / temperature alarm events before turning the alarm from automatic to manual: Always manual AL61 = 0 Always automatic AL61 =16 From manual to utomatic if AL61 value is between 1 and 15	0	16		
	High water evaporator inlet temperature				
AL 62	Maximum number of high water temperature alarm events Always manual reset if AL62 = 0 Always automatic reset if AL62 =16 From automatic to manual reset if AL62 =1..15	1	16		
AL 63	High water temperature alarm delay time starting from ON compressor	0	250	Sec	10 sec
AL 64	High water evaporator inlet temperature set point	-50.0 -58	70.0 158	°C °F	Dec int
AL 65	High water evaporator inlet temperature differential	0.1 1	25.0 45	°C °F	Dec int
AL 66	Probe selection for high water evaporator inlet temperature Allows to select which probe (Pb1..Pb6) the function uses	1	6		
	Low water evaporator inlet temperature				
AL 67	Maximum number of low water temperature alarm events Always manual reset if AL67 = 0 Always automatic reset if AL67 =16 From automatic to manual reset if AL67 =1..15	1	16		
AL 68	Low water temperature alarm delay time starting from ON compressor	0	250	Sec	10 sec
AL 69	Low water evaporator inlet temperature set point	-50.0 -58	70.0 158	°C °F	Dec int
AL 70	Low water evaporator inlet temperature differential	0.1 1	25.0 45	°C °F	Dec int
AL 71	Probe selection for low water evaporator inlet temperature Allows to select which probe value NTC/PTC Pb1..Pb6	1	6		
	Inlet / outlet water tempearture differential alarm				
AL 72	Inlet / outlet water tempearture differential alarm enable 0= disabled 1= only in chiller mode 2= only in heat pump mode 3= in chiller and heat pump mode	0	3		
AL 73	Maximum number of Inlet / outlet water tempearture differential alarm Always manual reset if AL73 = 0 Always automatic reset if AL73 =16 From automatic to manual reset if AL73 =1..15	1	16		
AL 74	Inlet / outlet water tempearture differential alarm delay time starting from ON compressor	0	250	Sec	10 sec
AL 75	Inlet / outlet water tempearture differential alarm set point in chiller mode	-50.0 -58	70.0 158	°C °F	Dec int
AL 76	Inlet / outlet water tempearture differential alarm differential in chiller mode	0.1 1	25.0 45	°C °F	Dec int
AL 77	Inlet / outlet water tempearture differential alarm set point in heat pump mode	-50.0 -58	70.0 158	°C °F	Dec int
AL 78	Inlet / outlet water tempearture differential alarm differential in heat pump mode	0.1 1	25.0 45	°C °F	Dec int

AL 79	Probe 1 selection for Inlet / outlet water tempearture differential alarm Allows to select which probe value NTC/PTC Pb1..Pb6	1	6		
AL 80	Probe 2 selection for Inlet / outlet water tempearture differential alarm Allows to select which probe value NTC/PTC Pb1..Pb6	1	6		
Pr1	Password	0	999		
Pr2	Password	0	999		
Pr3	Password	0	999		

43 BLACK-OUT

After the black-out is restored:
1. The instrument restores the same operating mode lost after the supply failure.
2. If active, the defrost is aborted.
3. All the timers and time parameters are reloaded.
4. The manual alarm is not reset.

44 WIRING CONNECTIONS

44.1 HARDWARE RESOURCES FOR IC206CX MODEL

6 digital outputs (relays) MAX current on the relay contacts relè 5(2)A 250V - MAX common current 10A 250V
11 digital inputs (free of voltage)
6 analogue inputs:
- 4 NTC / PTC probes
- 2 NTC / PTC / pressure transducer 4÷20 mA / pressure transducer ratio-metric 0÷ 5.0 Volt

4 modulating outputs:
- 2 configurable 0 ÷ 10 Volt
- 2 configurable 0 ÷ 10.0 Volt or cut of phase (for modulating condenser fan)

1 output to connect a remote keyboard (max 2 remote keyboards)
1 TTL output for “Hot Key 64” or for XJ485CX (interface module for monitoring system)

C_{1R} = common line for RL1, RL2, RL3, RL4 C_{2R} = common line for RL5, RL6

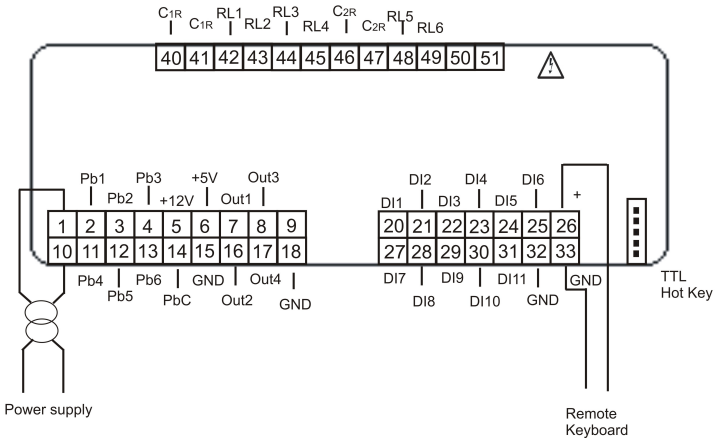

44.2 HARDWARE RESOURCES FOR 208CX MODELS

8 digital outputs (relays) MAX current on the relay contacts relè 5(2)A 250V - MAX common current 10A 250V
11 digital inputs (free of voltage)
6 analogue inputs:

- 4 NTC / PTC probes
- 2 NTC / PTC / pressure transducer 4÷20 mA / pressure transducer ratio-metric 0÷ 5.0 Volt

4 modulating outputs:

- 2 configurable 0 ÷ 10 Volt
- 2 configurable 0 ÷ 10.0 Volt or cut of phase (for modulating condenser fan)

1 output to connect a remote keyboard (max 2 remote keyboards)
1 TTL output for "Hot Key 64" or for XJ485CX (interface module for monitoring system)

C_{1R} = common line for RL1, RL2, RL3, RL4 C_{2R} = common line for RL5, RL6, RL7, RL8

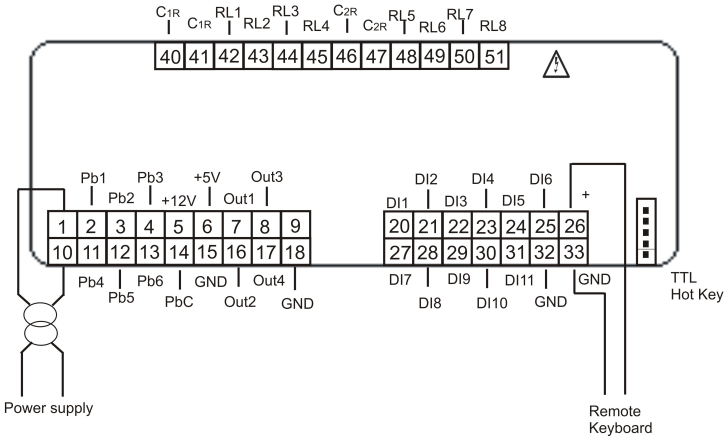

44.3 ANALOG INPUTS NTC – PTC PROBES

PbC = common terminal
Pb1…Pb6 = probe inputs

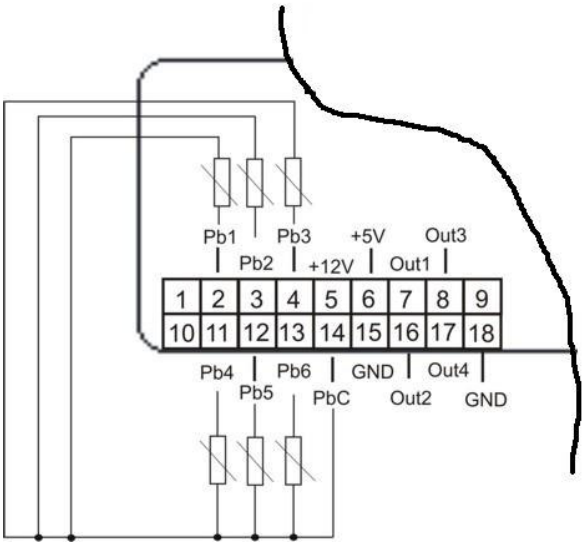

44.4 DIGITAL INPUTS

GND = common terminal
ID1…ID11 = digital inputs

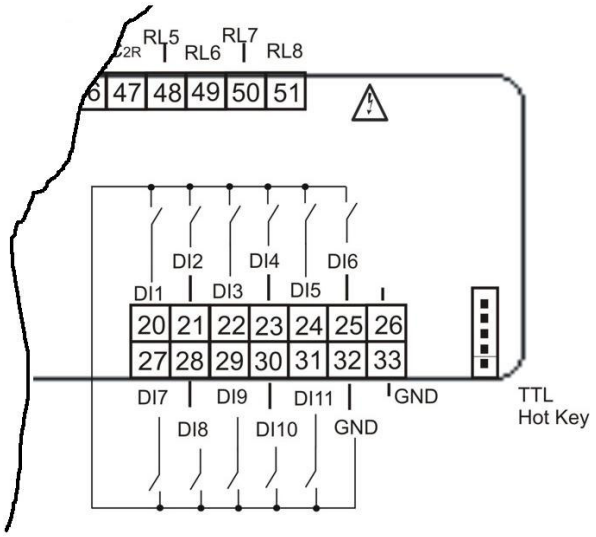

44.5 ANALOG INPUT FOR PRESSURE TRANSDUCER PP30 (4 ÷ 20MA SIGNAL)

12V = power supply for pressure transducers
Pb3 and Pb4 = pressure transducer inputs

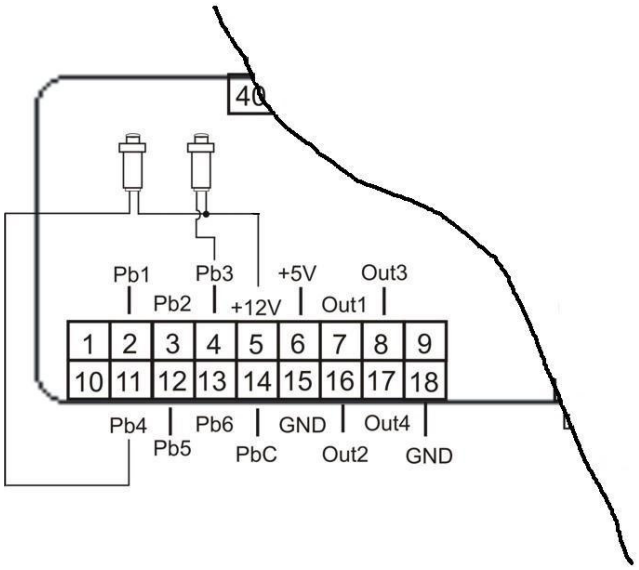

44.6 ANALOG INPUT FOR PRESSURE RATIOMETRIC TRANSDUCER PPR30 (0 ÷ 5V SIGNAL)

+5V = power supply for pressure transducers
GND = ground for pressure transducers
Pb3 and Pb4 = pressure transducer inputs

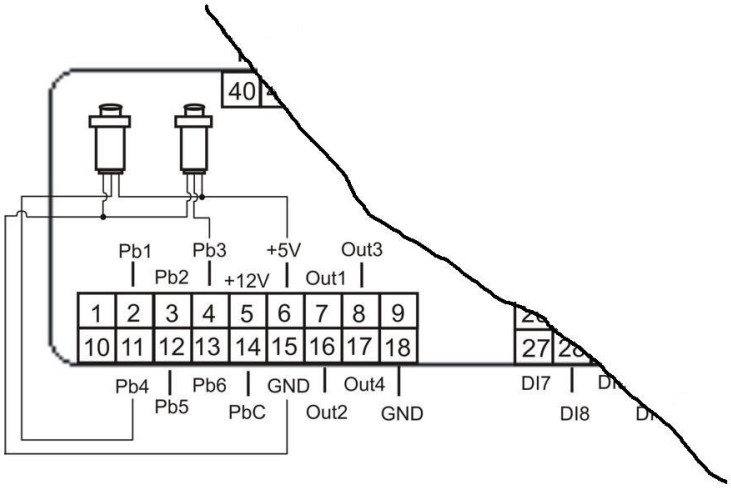

45 PWM OUTPUT FOR CONDENSING FAN SPEED CONTROL

OUT3 and OUT4 = cut of phase signals for the modulation of the condenser fan
GND = ground for pressure transducers

The compatible modules are the following:
XV05PK mono-phase , cut phase control 500 Watt (2A)
XV10PK mono-phase , cut phase control 1000 Watt (4A)
XV22PK mono-phase , cut phase control 2200 Watt (9A)

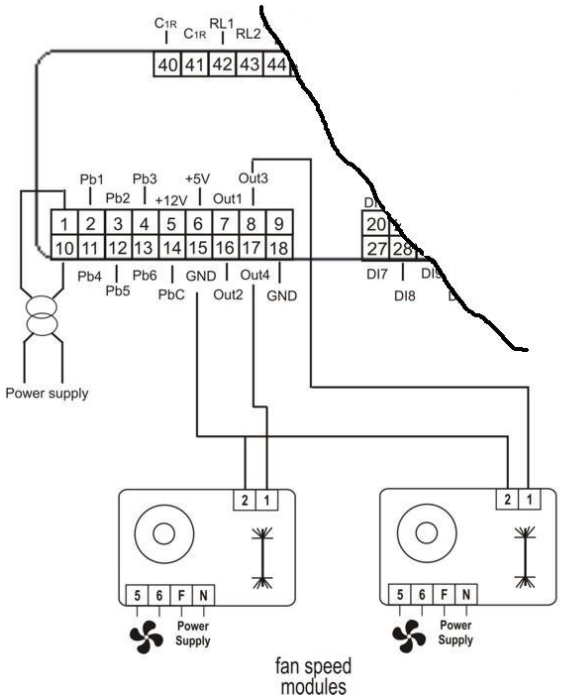

45.1 PROPORTIONAL OUTPUT FOR FAN CONDENSING CONTROL OR FOR COMPRESSOR INVERTER CONTROLLED OR FOR AUXILIARY OUTPUTS

OUT3 and OUT4 = signals for the modulation of the condenser fan
GND = ground for pressure transducers

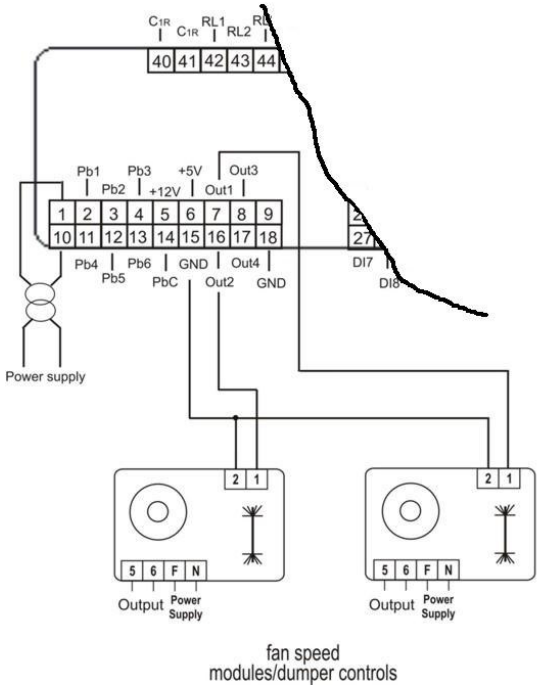

45.2 PROPORTIONAL OUTPUTS CONFIGURED FOR AUX RELAY CONTROL

OUT3 and OUT4 = signals for relays
GND = ground

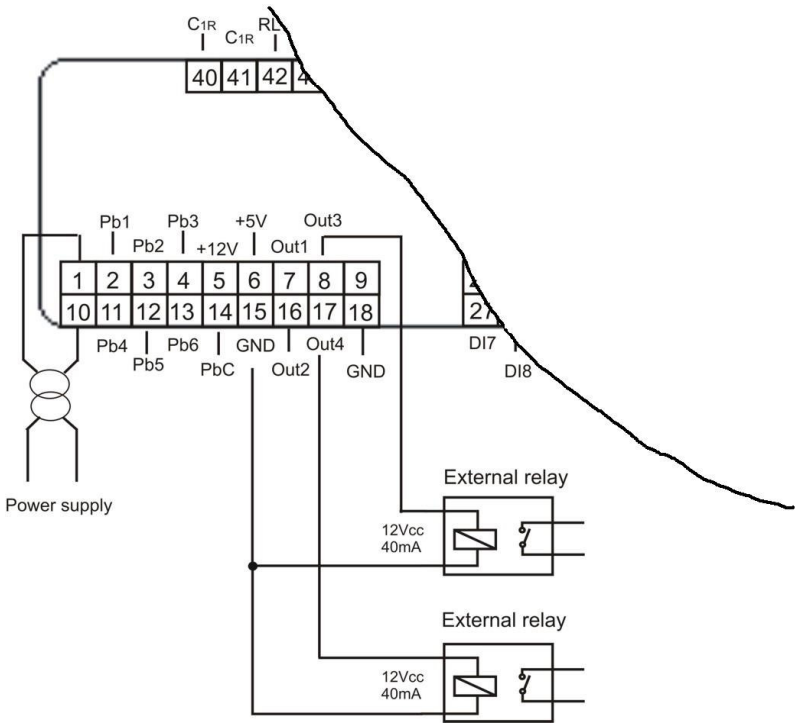

45.3 HOT KEY 64 CONNECTION

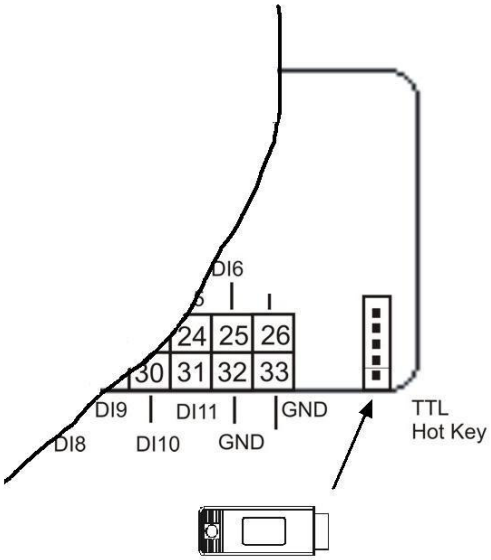

45.4 XJ485CX CONNECTION

The XJ485CX interface is a signal converter (from TTL to RS485). The RS485 uses two terminals (+) and (-) that must be connected respecting the polarity. Use the CAB/RS02 to connect the XJ485 interface to the TTL connector.

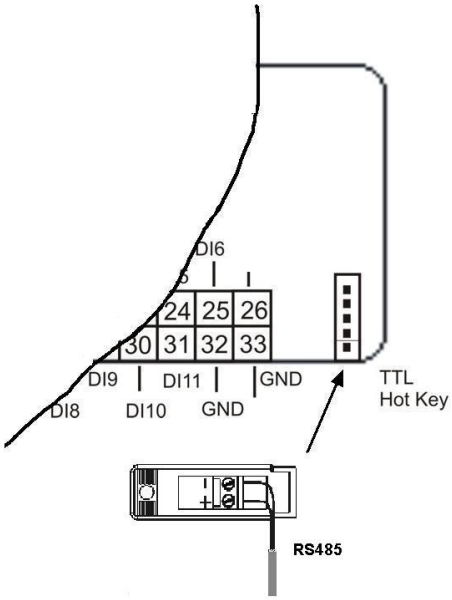

45.5 REMOTE KEYBOARD VI620CX

Can be used max. 2VI620CX remote keyboards.
Use shielded cable for the connection up to 150mt maximum.
In case of communication failure the upper display shows "**noL**" (no link).
Use the CAB/CJ30 to interface the ichill connector to the shielded cable.

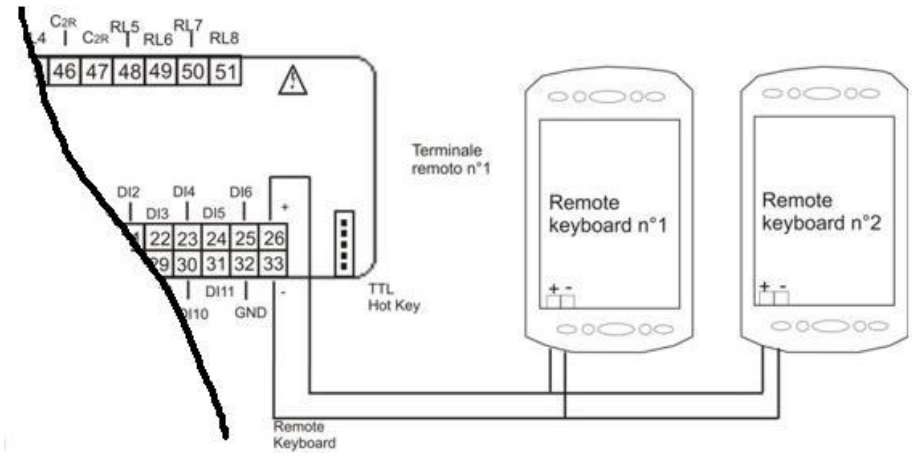

46 INSTALLING AND MOUNTING

46.1 PANEL CUT- OUT

The instrument must be mounted on vertical panel, with panel cut-out 71x29mm, and fixed using the special bracket supplied.
Avoid locations subject to heavy vibration, corrosive gases or excessive dirt. Ensure ventilation around the instrument.

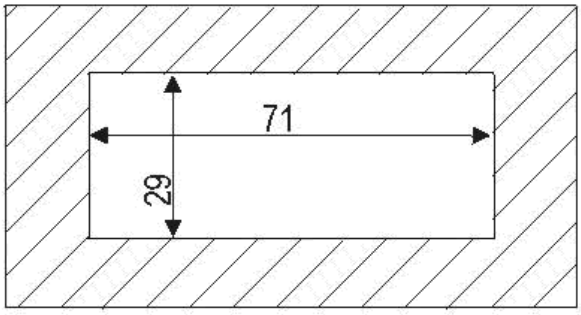

46.2 VERTICAL BOARDS VI620CX PANEL CUT-OUT

The remote terminals are for panel mounting, panel cut-out 72x56 mm, and screwed with two screws.
The IP65 can be reached with the gasket RGW-V (optional).

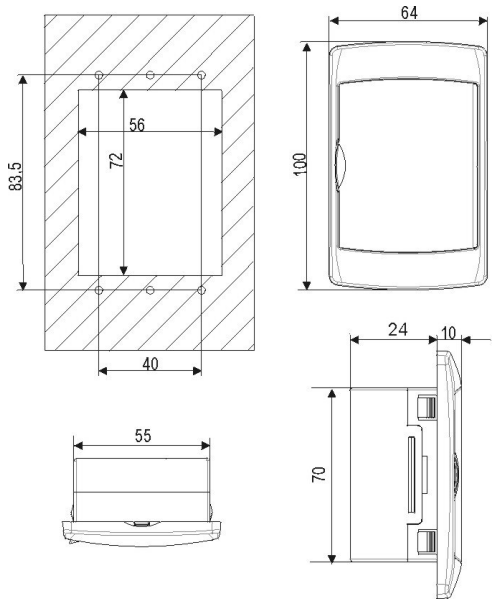

WALL MOUNTING: use the vertical V-KIT (black, white and grey) as described in the following scheme:

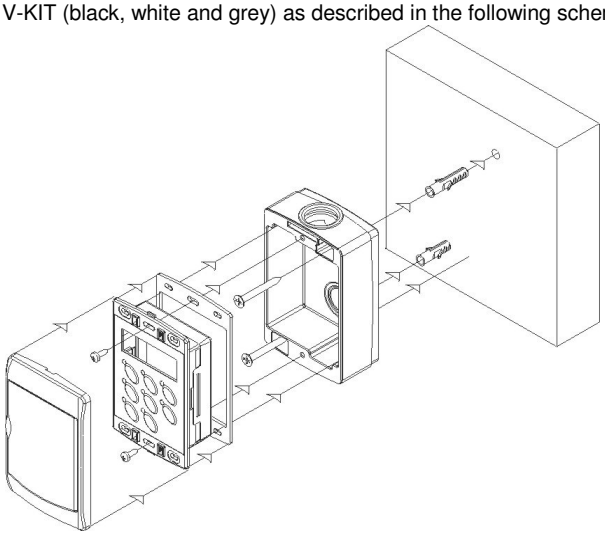

47 ELECTRICAL CONNECTIONS

The instrument is provided with:
- 2 removable terminal blocks MOLEX MICROFIT 14 and 18 ways for power supplay / digital and analogue inputs and modulating outputs
- 1 removable terminal blocks AMP 12 ways for the relay outputs
- 5 ways connector for TTL RS485 interface outputs.

Wire size:
- signal cable AWG 24
- power supply cable AWG 22
- relay output AWG 17

General notes:
- Check the connecitons and the line voltage before turning on the power supply.
- Keep low voltage cables, such as analogue/digital inputs/outputs and probes, away from power cables and terminals.
- Respect the maximum load current of each relay output, in case of power loads use filtered contactors.

48 ACCESSORIES

48.1 MONOPHASE FAN CONTROL: 230VAC AND CUT PHASE CONTROL

Models	XV05PK	XV10PK	XV22PK
Power	500W	1000W	2200W
Ampere	2A	4A	9.5A

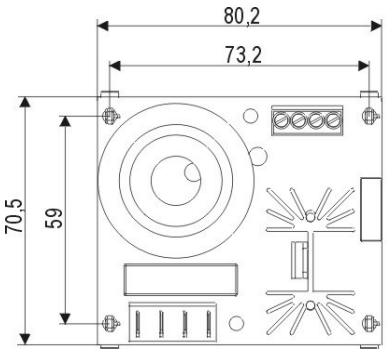

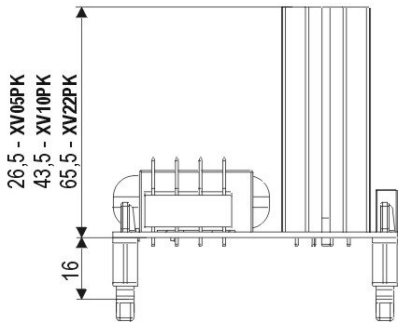

Power supply			
230Vac	Input		
0 - 230Vac	output		
-10 - 65°C	Operating temperature		
Naylon supports			
D	15mm		
Height			
Model	**XV05PK**	**XV10PK**	**XW22PK**
Y	25mm	42mm	64mm
Connections			
A 1(+), 2(-)	**PWM** input control		
B 3(+), 4(-)	**PWM** output repetition signal		
F	Phase		
N	Neutral		
5 - 6	Fan output		
Terminals 3 and 4 allows to connect another board in parallel to control two separate fans with the same input control.			
Terminals 1 / 2 / 3 / 4 are for screw for a 2.5mm wire			
Terminals 5 / 6 / F / N are 6,3mm faston			

48.2 WIRING KIT

CWCXA15-KIT e CWCXA30-KIT: wiring kit for IC206CX (lenght of 1,5mt or 3mt)
CWCXB15-KIT e CWCXB30-KIT: wiring kit for IC208CX (lenght of 1,5mt o 3mt)

48.3 TRANSFORMER

The **TF10** trasnformer models: **230/12 Vac** , **230 /24 Vac**, **110 / 12 Vac**, **24 / 12 Vac**

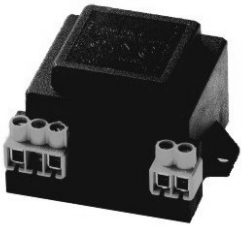

48.4 XJ485CX

TTL/RS485 converter to connect the Ichill to a monitoring system

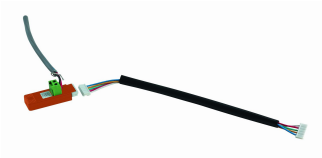

48.5 RT314 KIT

Relay module (DIN rail mounting)

48.6 HOT KEY:

Parameters copying key

49 TECHNICAL DATA

Housing: self extinguishing ABS.
Case: frontal 32x74 mm; depth 60mm
Mounting: panel mounting in a 29x71mm panel cut-out
Frontal protection: IP65
Display:
Top Display 4 digits with d.p.
Bottom Display 4 digits with d.p.
Power supply:
12Vac -10%÷+15% or
24 Vac/dc ±10% 50/60 Hz
Power absorption: 10VA max.
Analog Inputs: 4 configurable (NTC/PTC/dig. input) + 2 configurable (NTC/PTC/4÷20ma/0÷5Volt/dig. input)
Digital inputs: # 11 (free voltage)
Relay outputs: IC206CX: 6 SPDT 5(2) A, 250Vac, **IC208CX:** 8 SPDT 5(2) A, 250Vac
Max. current on common line: 10A
Data storing: on the non-volatile memory (EEPROM).
Operating temperature: 0÷55 °C.
Storage temperature: -30÷85 °C**.**
Relative humidity: 20÷85% (no condensing)
Measuring range: - 50÷110 °C (- 58 ÷ 230 °F) NTC / -50.0÷150 °C (-58÷302 °F) PTC or 0÷ 50 bar (0÷725 psi)
Resolution: 0,1 °C or 1 °F
Accuracy of the controller at 25°C: ±0,7 °C ±1 digit

NOTE

Dixell S.p.A. Z.I. Via dell'Industria, 27
32010 Pieve d'Alpago (BL) ITALY
tel. +39 - 0437 - 98 33 - fax +39 - 0437 - 98 93 13
E-mail:dixell@dixell.com - http://www.dixell.com