Библиотека СОК

INSTALLATION - OPERATION - SERVICE MANUAL

TELECOM-RANGE

EN Split unit

r HFC R-410A

CLIMAVENETA

HED-HCAT
0011÷0061

INDEX

General warnings 4
Fundamental safety rules 4
Identification HED unit 5
Receiving and handling HED unit 5
Receiving and handling HCAT product 6
Description of HED unit 7
Description of standard HCAT unit 8
Dimensioned drawings 9
General technical data HED-HCAT 13
Operating limits 13
Installation HED unit 14
Installation HCAT unit 14
Electrical connections HED unit 15
Electric connections HCAT unit 16

ELECTRICAL WIRING DIAGRAM ON THE MACHINE

Connecting the refrigerant pipes for HED unit 18
Refrigerant connections 19
Sizing of refrigerant pipes 20
Control diagram 22
Controller 23
Description of the areas shown on the display 24
Display screens 27
"LAN" - local network 39
Interconnection between the units by shielded cable 40
Setting the addresses of the units (from 1 to 10) and the user terminals (from 11 to 20) 40
Configuring the software for unit recognition and management 42
Special functions of the lan network 43
Serial boards and supervisory system 46
Alarms (troubleshooting) 47
Troubleshooting 48
Operating characteristics 49
Extended shutdown 49
Routine maintenance 49
Special maintenance 50
Disposal 50
Condensate drain 50

Liability disclaimer
This bulletin refers to standard executions, particularly as regards dimensions, weight, electric, hydraulic, aeraulic and refrigerant connections (where applicable). Contact Climaveneta Commercial Office for further drawings and schemes.
Climaveneta declines any liability deriving from use of the bulletin. This bulletin is the exclusive property of Climaveneta and all forms of copy are prohibited. The data contained herein are subject to change without notice.

In some parts of this manual, the following symbols are used:

⚠ **WARNING =** for actions that require special care and suitable preparation

⛔ **PROHIBITED =** for actions that absolutely MUST

Specialist personnel (electrician) Person with in-depth knowledge and experience such as to be able to recognise risks and avoid dangers that may derive from electricity (IEV 826-09-01).

GENERAL WARNINGS

⚠ **The HED** terminal units are the indoor units in a "split" two section system. Combined with the HCAT condensing units, they form a system for air conditioning only. Incorrect installation, control and maintenance, improper use or installation by unqualified personnel absolves the **manufacturer** from all liability, whether contractual or otherwise, for damage to people, animals or things. Only those applications specifically indicated in this list are permitted.

Read this manual carefully. All work must be carried out by qualified personnel in conformity with legislation in force in the country concerned.

The guarantee is invalidated if the above instructions are not respected and if the unit is started up for the first time without the presence of personnel authorised by the Company (where specified in the supply contract) who should draw up a "start-up report".

The documentation supplied with the unit must be consigned to the owner who should keep it carefully for future consultation.

When the items are consigned by the carrier, check that the packaging and the unit are undamaged. If damage, missing components or consignment errors are noted, indicate this on the delivery note.

A formal complaint should be sent via fax or registered post to the After Sales Service within eight days from the date of receipt of the items.

All the operations involved in handling, installing, starting up and testing the unit must be carried out by qualified personnel. Failure to observe this warning could cause serious damage.

This appliance contains R410A refrigerant gas: at the end of its working life, it should be taken to a special collection centre; care should be taken to avoid damage to the gas circuit and the finned coil.

Too low a temperature is harmful to health and a useless waste of energy. Avoid direct contact with the air flow for prolonged periods.

These appliances have been designed for cooling and must be used for this purpose in applications compatible with their performance characteristics.

FUNDAMENTAL SAFETY RULES

When operating equipment involving the use of electricity and refrigerant gas, a number of fundamental safety rules must be observed, namely:

⛔ **The unit must not be used by children** or by unfit persons without suitable supervision.

Do not touch the unit with bare feet or with wet or damp parts of the body.

Do not carry out cleaning operations without first disconnecting the unit from the electricity supply by placing the mains switch in the "off" position.

Do not modify safety or regulation devices without authorisation and instructions from the manufacturer.

Do not pull, detach or twist the electrical cables coming from the unit, even when disconnected from the mains electricity supply.

Do not open doors or panels providing access to the internal parts of the unit.

Do not dispose of, abandon or leave within reach of children packaging materials (cardboard, staples, plastic bags, etc) as they may represent a hazard.

Do not allow refrigerant gas to leak into the atmosphere.

Avoid contact with the refrigerant gas as it is potentially hazardous.

Do not sit or stand on the appliance and/or rest any type of object on top of it.

Do not spray or throw water directly on the appliance.

Do not introduce pointed objects through the air intake grills.

⚠ **Respect safety distances** between the unit and other equipment or structures. Guarantee adequate space for access to the unit for maintenance and/or service operations.

Power supply: the cross section of the electrical cables must be adequate for the power of the unit and the power supply voltage must correspond with the value indicated on the respective units. All units must be earthed in conformity with legislation in force in the country concerned.

Handle the unit with the utmost care (see weight distribution table) to avoid damage.

IDENTIFICATION HED UNIT

The direct expansion units cab be identified by the:

Packaging label
Giving the data identifying the product.

Rating plate
Giving the technical and performance data of the unit.
If this is lost, ask the After Sales Service for a replacement.

⚠ Tampering with or the removal or absence of rating plates or other means enabling the unit to be identified causes problems during installation and maintenance.

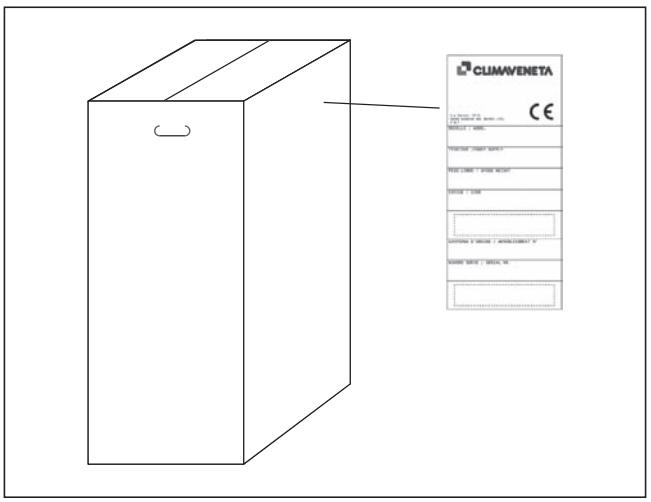

RECEIVING AND HANDLING HED UNIT

The direct expansion units are supplied accompanied by:
- instruction manual.
- warranty certificate.
- CE declaration.

These are contained in a plastic bag attached to the top of the unit.

The unit should always be handled by qualified personnel using equipment adequate for the weight of the unit.

⚠ **The instruction manual** is an integral part of the unit and should therefore be read and kept carefully.

⊖ **Do not dispose of packaging** materials in the environment or leave them within reach of children as they may represent a hazard/source of pollution.

RECEIVING AND HANDLING HCAT PRODUCT

The **HCAT** condenser units are supplied accompanied by:
- instruction manual.
- guarantee certificate.
- CE declaration.

These are contained in a plastic bag (A) attached to the top of the unit.

The unit should always be handled by qualified personnel using equipment adequate for the weight of the condenser unit. If a forklift truck is used, insert the forks under the base, spacing the forks as wide apart as possible.
If a crane is used, pass the cables through the bottom of the base, making sure they do not exert pressure on the unit. Once the packaging has been removed, the unit can be lifted and moved by inserting two metal tubes (max. diameter: 1/2") into the feet provided for this purpose and using suitable handling equipment.

⚠ **The instruction manual** is an integral part of the unit and should therefore be read and kept carefully.

⛔ **Do not dispose** of packaging materials in the environment or leave them within reach of children as they may represent a hazard.

⚠ **The weight of the condenser unit** is biased towards the compressor side (side of the packaging with the bar code, see figure at the foot of the page).
During transport, the condenser unit must be kept in the vertical position.

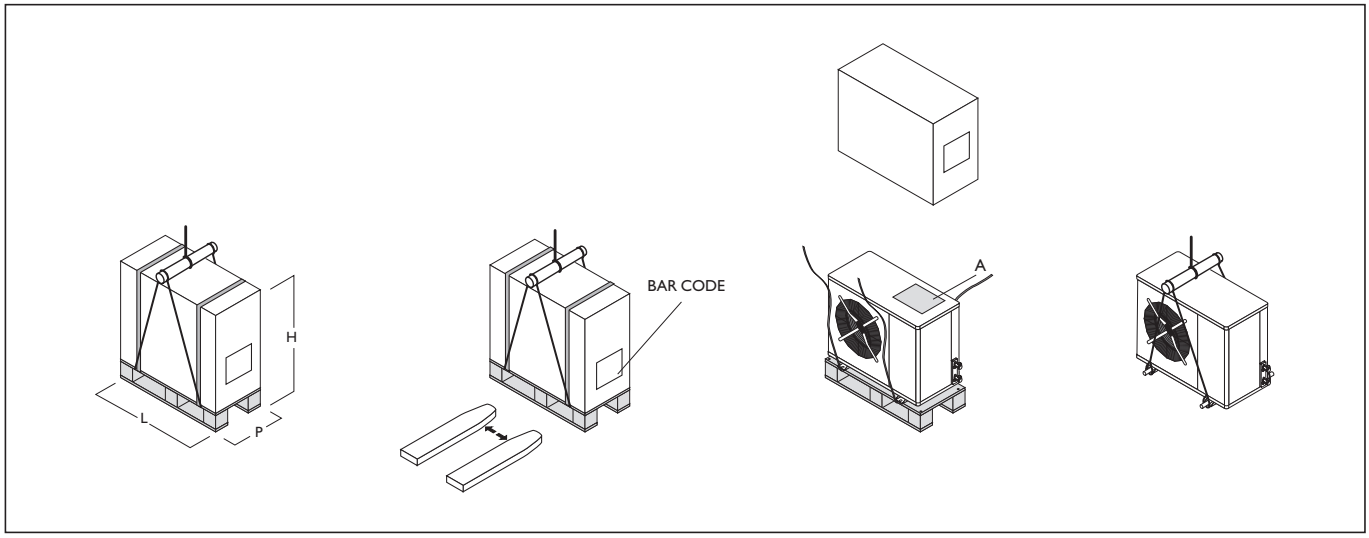

DESCRIPTION OF HED UNIT

The HED terminal units are the indoor units in a "split" two-section system.
Combined with the HCAT condensing units, they form a system for air conditioning only.
The HED units are supplied without refrigerant; this is supplied with HCAT units

STRUCTURE

Powder coated metal plate base panelling and inside structure, with naturally draining stainless steel condensate collection pan. Non-flammable closed cell polyethylene foam thermal insulation and soundproofing on the inside.

ELECTRICAL PANEL

Power and control electrical panel constructed in accordance with IEC 204-1/EN60204-1, complete with control and terminal blocks for connection to the power supply and auxiliary controls.

AIR FILTERS

Filter removable and washable made of acrylic material self-extinguishing with efficiency class EU3 (standard) or higher EU4.

HEAT EXCHANGER COILS

Made from copper tubes and aluminium fins with large heat-exchange area.

EVAPORATOR FAN

Centrifugal or radial fan with backward-curved blades, available in the 220 Vac basic version, or alternatively 48 VDC, with electronic speed control and statically and dynamically balanced impellers. High pressure head available.

REFRIGERANT CIRCUIT

Unit featuring a refrigerant circuit complete with: expansion device, safety pressure switch to control low suction pressure

ELECTRIC HEATER

Electric heaters with double safety feature. Heating capacity 1,7 or 3,4 kW, depending on the size selected.

PRESSURE DIFFERENTIAL SWITCHES

Two differential air pressure switches to detect indoor fan faults or dirty filters.

CONTROL PLC

Unit operation is managed by a programmable PLC with graphic display

OPTIONAL ACCESSORIES TO BE REQUESTED WHEN ORDERING

- Humidity Sensor
- Function Dehumidification
- Clock Card
- Serial adapter for interfacing with external BMS
- Shutter management and free cooling
- Air filter EU4 instead EU3 standard
- Air filter for fresh air intake
- Power supply from UPS 48 VDC for evaporator fan and damper free cooling if req.
- Electric heater
- Vibration dampers for ceiling mounting

For any further request please contact the offce.

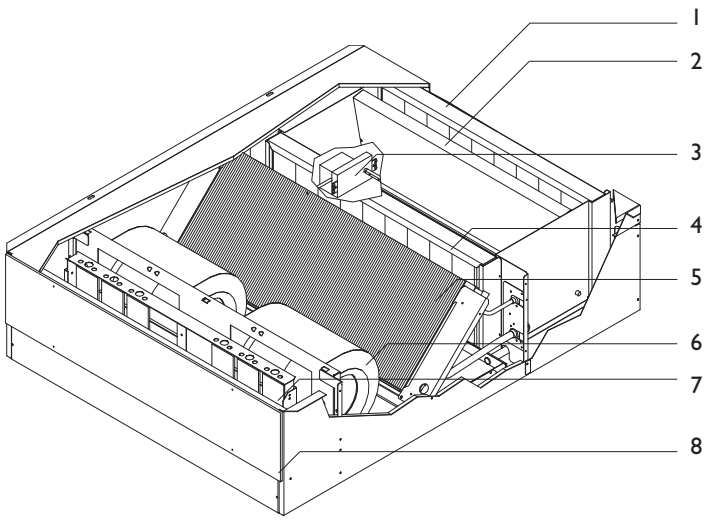

1 Air pre-filter (aluminium sleeve)
2 Motor-driven freecooling damper
3 Damper motor
4 Air filter (EU3)
5 Finned coil
6 Fan assembly
7 Electric heater (optional)
8 Electrical panel with board

Air-cooled condensing units with axial-flow fans suitable for precision air-conditioning of mobile telephone base stations. Direct expansion version with R410A refrigerant.
They are factory tested and on site installation is limited to refrigerant and electrical connections.
Condensate pan, heat exchanger protection grille and vibration dampers fitted as standard.

STRUCTURE

Powder coated metal plate base panelling and inside structure. Non-flammable closed cell polyethylene foam thermal insulation and soundproofing on the inside.

COMPRESSORS

Hermetic rotary or scroll compressor with sump heater and thermal cut-out.

CONDENSER

Made using copper tubes and aluminium fins with a high exchange surface area. Connections with cocks and flared fittings.

FANS

Axial-flow fans, with external impeller, statically and dynamically balanced at low speed.
Six- or four-pole electric motor with built-in thermal protector. Housed in aerodynamic tubes with accident prevention grill. Device for operation according to outside air temperature: continuous fan rotation speed control via pressure transducer.

REFRIGERANT CIRCUIT

Refrigerant circuit featuring the following components: filter, liquid receiver. Unit supplied complete with non-freezing oil and R410A refrigerant charge, factory tested.

POWER AND CONTROL ELECTRICAL PANEL

Power and control electrical panel constructed in accordance with IEC 204-1/EN60204-1, complete with compressor contactor and thermal solenoid switch and door lock safety device.

OPTIONAL ACCESSORIES TO BE REQUESTED WHEN ORDERING

- Wall mounting brackets.
- Soundproof compressor jacket

The above accessories are optional. Consult the relative documentation for assembly instructions and technical data.

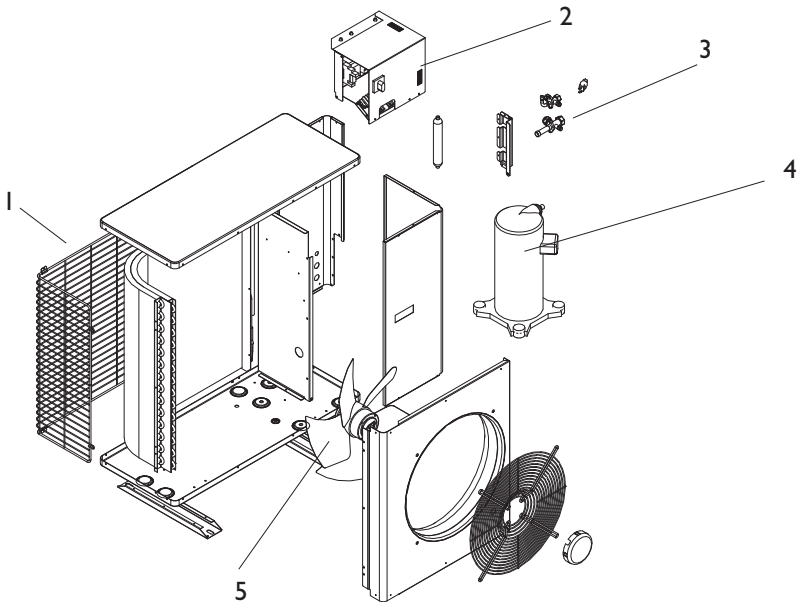

1 Finned coil
2 Electrical panel
3 Gas valve
4 Scroll compressor
5 Fan

HED 0011÷0031

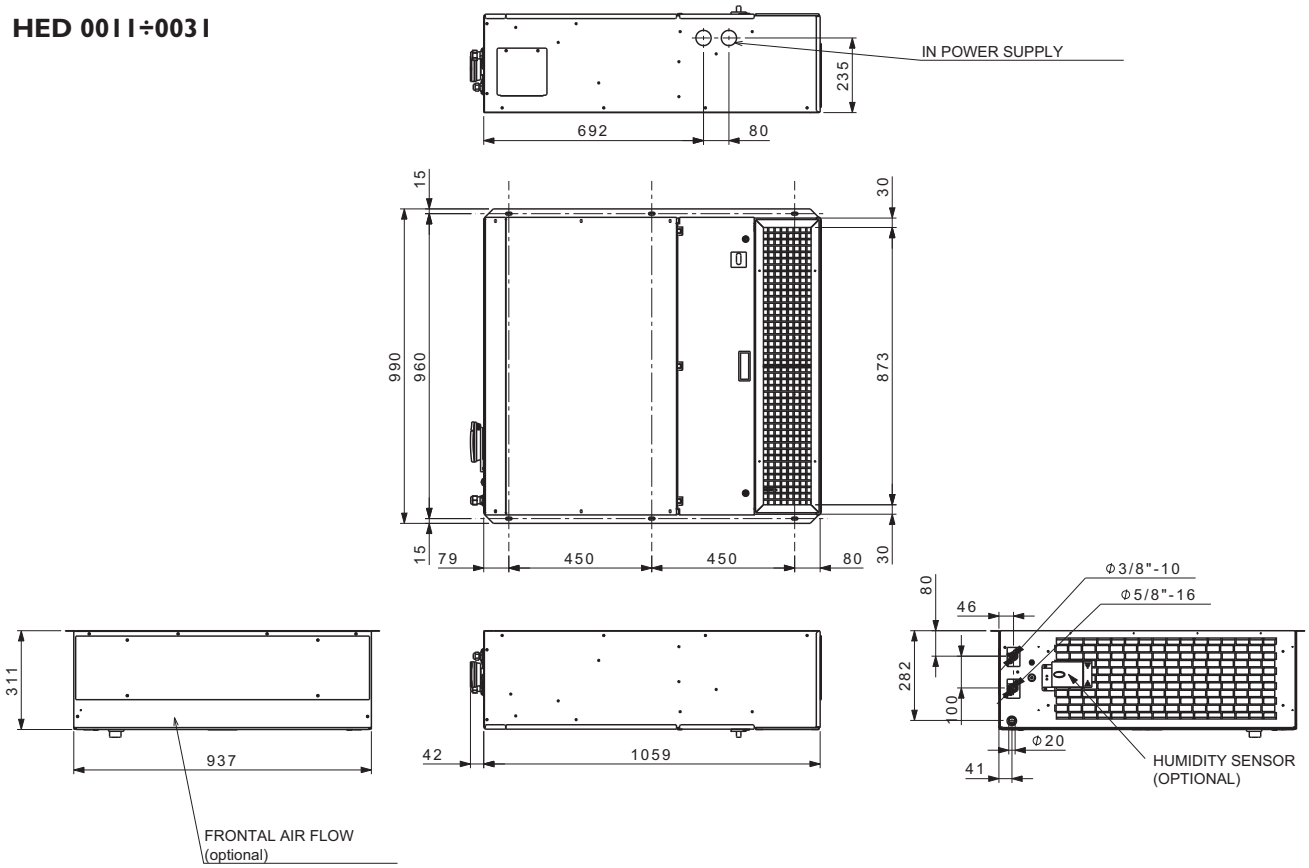

HED 0041÷0061

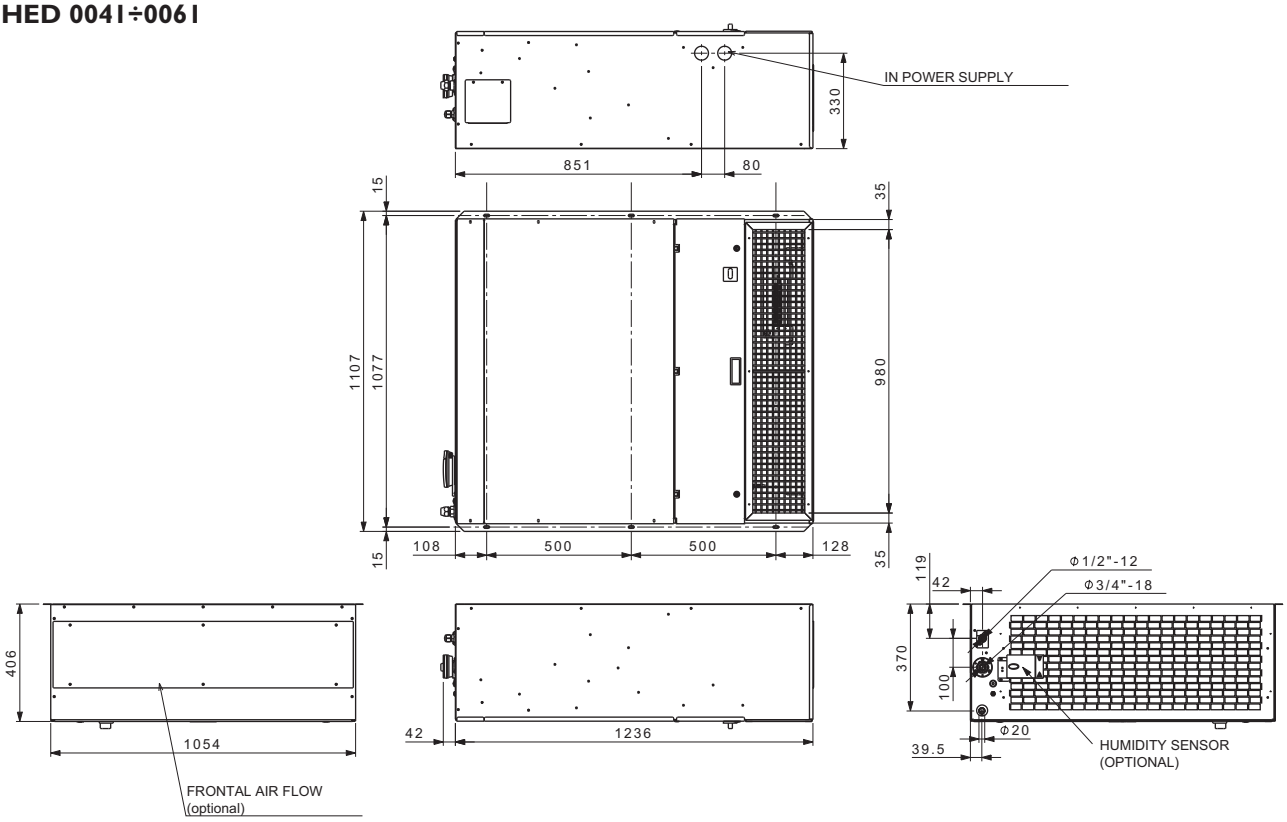

HED 0011÷0031 FREE COOLING

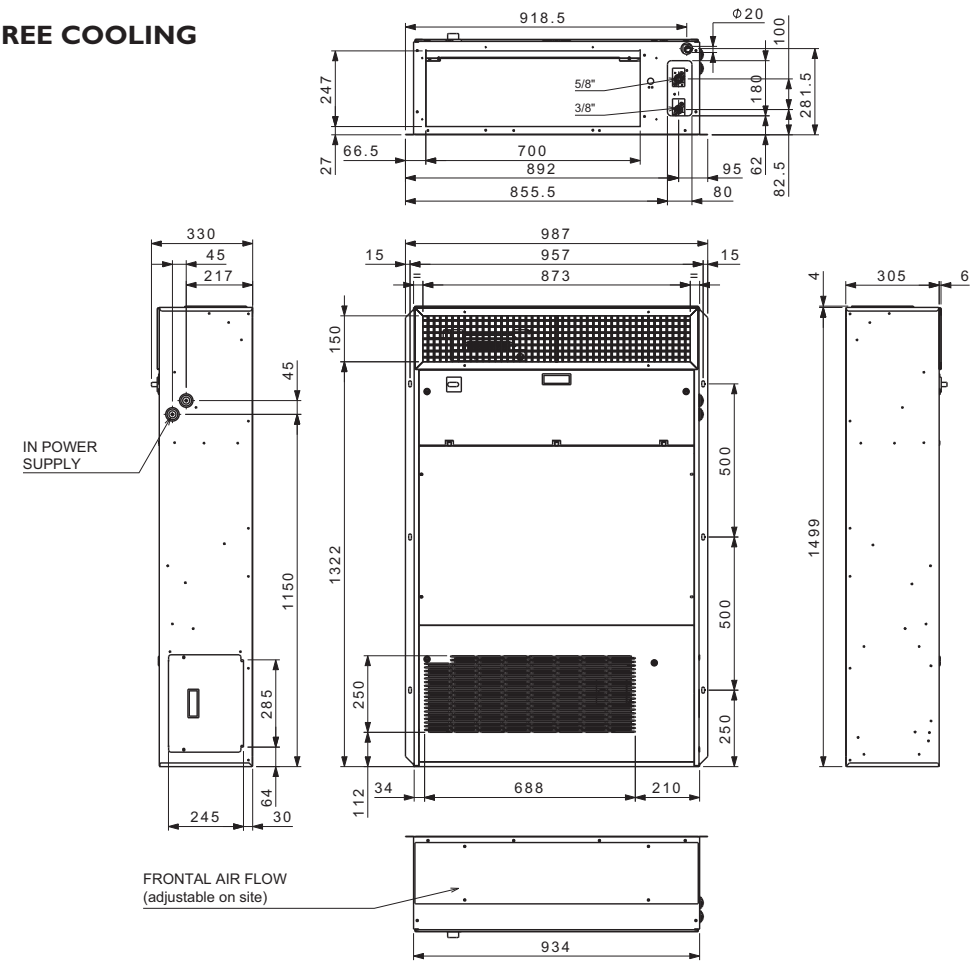

HED 0041÷0061 FREE COOLING

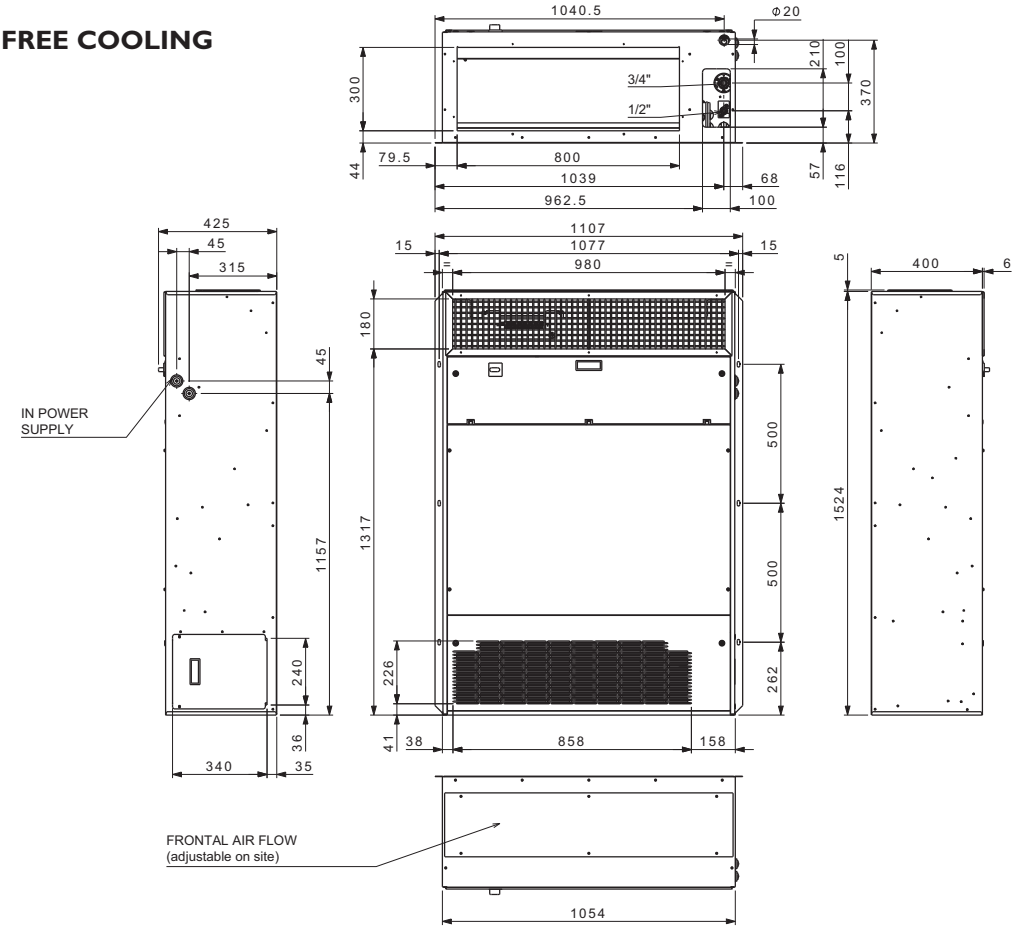

HCAT 0011÷0031

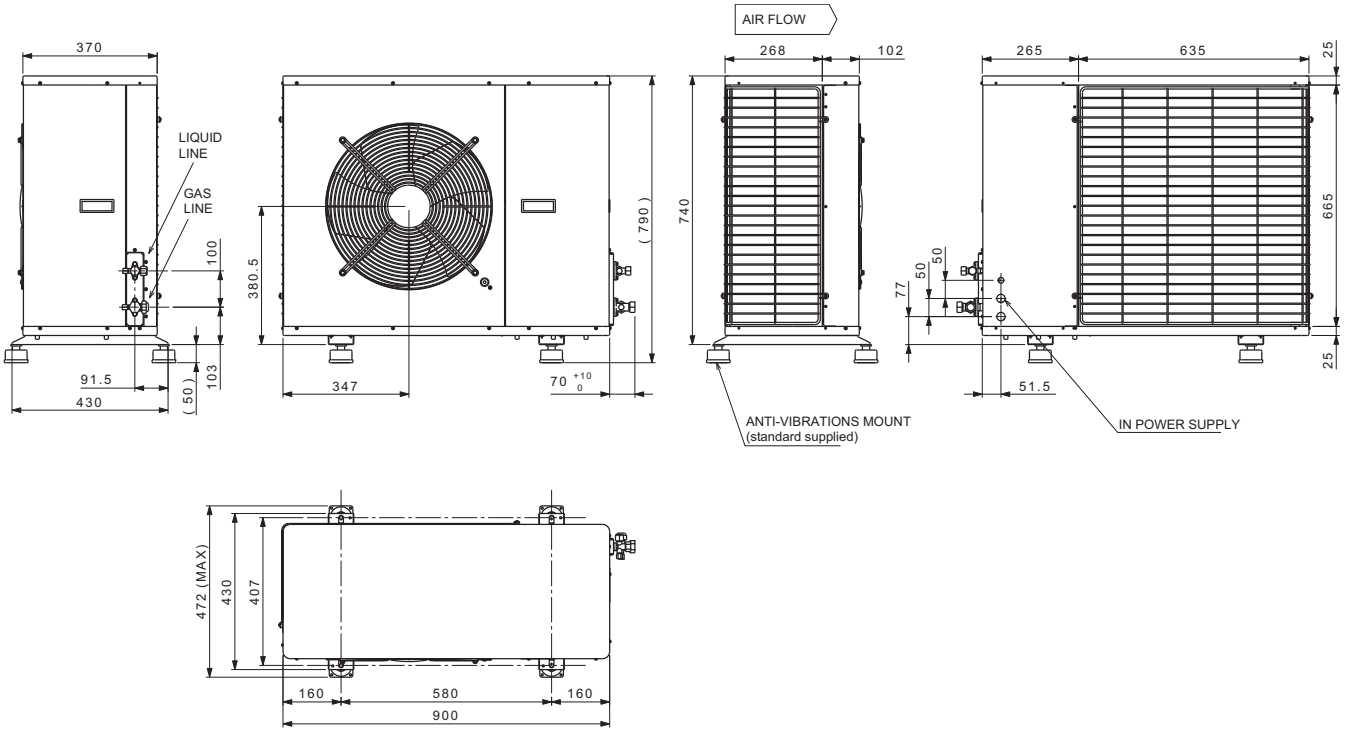

HCAT 0041÷0051

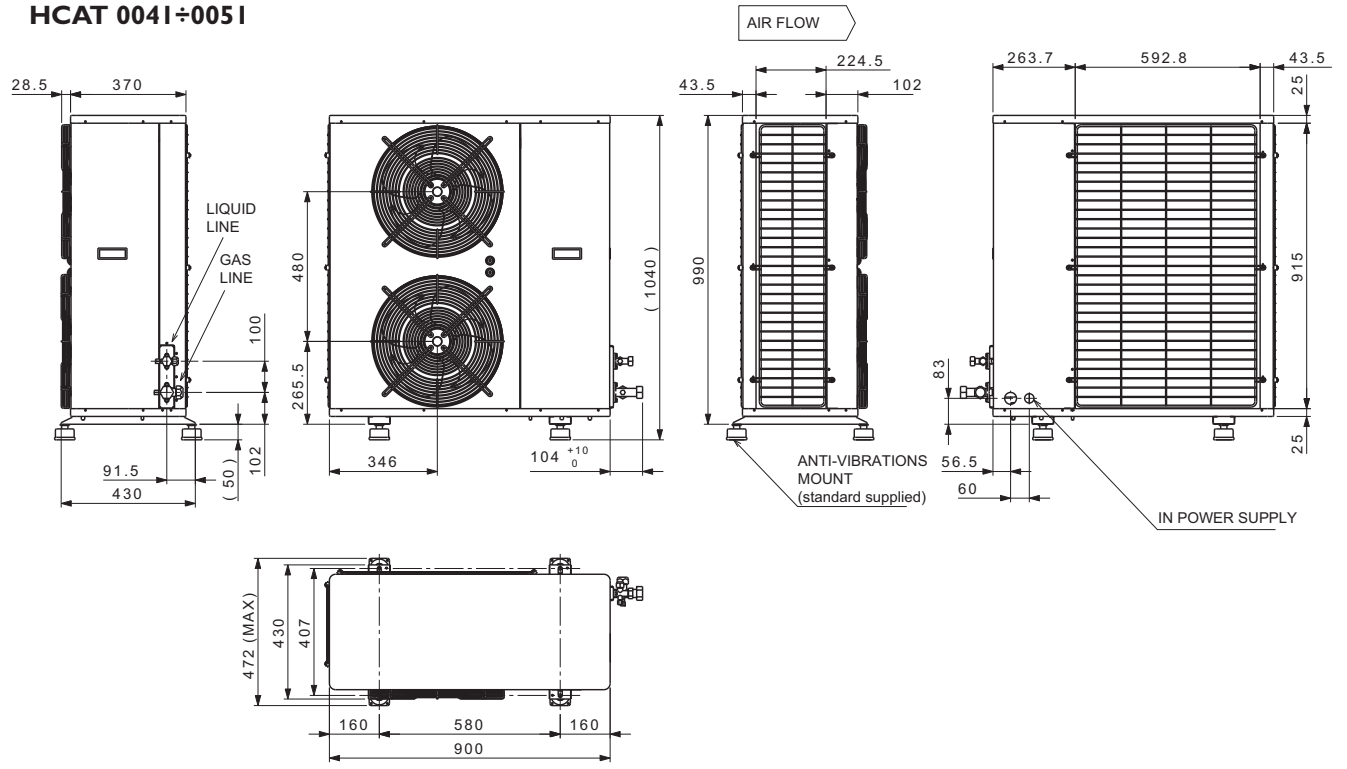

HCAT 0056÷0061

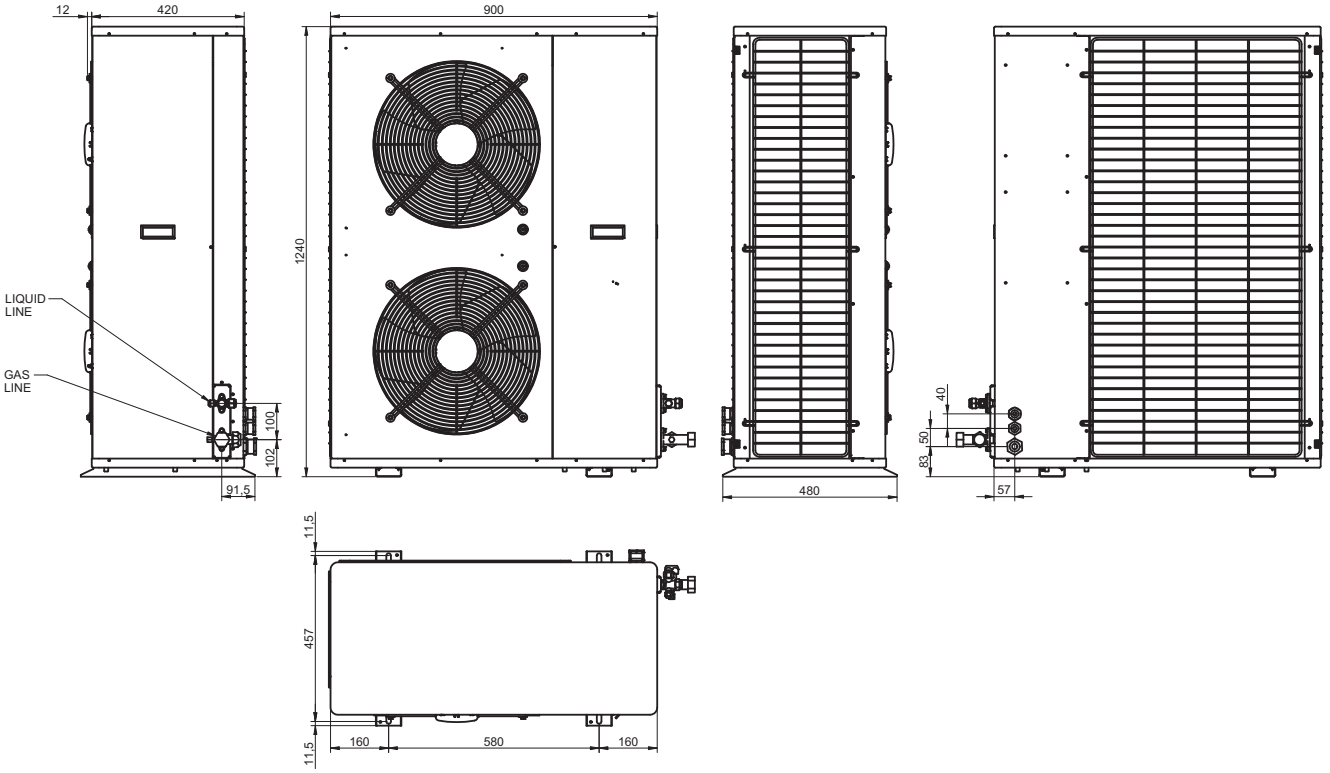

GENERAL TECHNICAL DATA HED-HCAT

Model			0011	0021	0031	0031	0041	0051	0056	0061
N. Circuit (s) / N. Compressor (s)			1/1	1/1	1/1	1/1	1/1	1/1	1/1	1/1
Refrigerant			R410A	R410A	R410A	R410A	R410A	R410A	R410A	R410A
Power supply V/Ph/Hz			230/1/50			400/3N/50				
COOLING CAPACITY										
Total cooling capacity(1)		kW	4,94	6,36	8,43	8,41	9,71	10,63	14,28	15,77
Sensible cooling capacity(1)		kW	4,94	5,65	6,77	6,75	9,17	9,53	12,47	13,76
SHR (1)			1,00	0,89	0,80	0,80	0,94	0,90	0,87	0,87
Compressor(s) power input(1)		kW	1,18	1,62	2,27	2,26	2,37	2,72	3,64	4,10
Evaporator air flow		mc/h	1450	1450	1600	1600	2450	2450	3200	3200
Free-cooling air flow		mc/h	1450	1450	1600	1600	2450	2450	3200	3200
Evaporator fan 48V DC power input		kW	0,55	0,55	0,55	0,55	1,08	1,08	1,08	1,08
Evaporator fan AC power input		kW	0,40	0,40	0,40	0,40	0,47	0,47	0,47	0,60
Condenser max. air flow		mc/h	2500	2500	2500	2500	3600	3600	4900	4900
Condenser fan AC power input		kW	0,16	0,16	0,16	0,16	0,14	0,14	0,32	0,32
Outdoor sound pressure level (r=1m, Q=2)		dB(A)	52	53	56	56	56	56	58	58
ELECTRIC HEATER										
Total heating capacity		kW	1,7	1,7	1,7	1,7	3,4	3,4	3,4	3,4
DIMENSIONS & WEIGHT										
Width	HED with Freee cooling	mm	1500	1500	1500	1500	1523	1523	1523	1523
	HED without Free cooling	mm	1060	1060	1060	1060	1236	1236	1236	1236
	HCAT	mm	900	900	900	900	900	900	900	900
Depth	HED with Freee cooling	mm	990	990	990	990	1110	1110	1110	1110
	HED without Free cooling	mm	990	990	990	990	1110	1110	1110	1110
	HCAT	mm	370	370	370	370	370	370	420	420
Height	HED with Freee cooling	mm	310	310	310	310	400	400	400	400
	HED without Free cooling	mm	310	310	310	310	405	405	405	405
	HCAT	mm	740	740	740	740	990	990	1240	1240
Net weight HCAT unit		kg	67	93	87	93	109	102	125	130
Net weight HED unit	HED with Freee cooling	kg	85	85	85	85	123	121	128	130
	HED without Free cooling	kg	74	74	74	74	107	98	109	111

(1) Ref. Conditions: Indoor=27°C, 45%UR Outdoor=35°C

OPERATING LIMITS

COOLING	Inside temp. DB/WB °C.	Outside temp. DB/WB °C
Max	32/23,5	48/-
Min	22/15,5	-25/-

DB: Dry bulb WB: wet bulb

CALIBRATION OF PROTECTION DEVICES HED-HCAT 0011	Opens (bar)	Closed (bar)	Reset
High pressure switch	41,5 (+0-1,4)	33(+-2)	automatic
Low pressure switch	3 (+-0,2)	3,9 (+-0,3)	automatic

CALIBRATION OF PROTECTION DEVICES HED-HCAT 0021÷0061	Opens (bar)	Closed (bar)	Reset
High pressure switch	42 (+0-1,4)	33(+-2)	automatic
Low pressure switch	3 (+-0,2)	3,9 (+-0,3)	automatic

INSTALLATION HED UNIT

CHOICE OF INSTALLATION SITE

Before installing the unit, agree with the customer the site where it will be installed, taking the following points into consideration:

- check that the fixing points are adequate to support the weight of the unit;
- pay scrupulous respect to safety distances between the unit and other equipment or structures (see functional clearances);
- install the unit with a minimum slope of 2 mm/m to guarantee condensate drainage.

POSITIONING

Before handling the unit, check the capacity of the lift equipment used, respecting the instructions on the packaging. To move the unit horizontally, make appropriate use of lift trucks or similar, in the most appropriate way.

The units are supplied with the following accessories to simplify installation: vibration dampers, washers and fastening bolts for the 6 slots on the indoor unit. The distance between the fastening points on the ceiling are shown in the dimensioned drawings on next page.

CONNECTION CONDENSATE DRAIN

This operation must be carried out with particular care.

The unit is fitted with a condensate drain pan, and the connector on the rear of the unit is supplied with a plastic hose.

The following warnings must be observed for the connections:

1. Do not connect the drains from different units together.
2. Make sure the drain pipe has a slope of at least 2 cm/m without obstructions or bottlenecks.
3. Fit a drain trap at least 30 mm below of the condensate pan.
4. Connect the condensate drain pipe to a rainwater drainage system. Do not connect to the sewage system as odours may be sucked up if the water in the drain trap evaporates.
5. After connecting, check correct drainage of the condensate by pouring water into the pan.
6. Fill the drain trap with water in the tray by pouring water into the pan.

INSTALLATION HCAT UNIT

CHOICE OF INSTALLATION SITE

Before installing the unit, agree with the customer the site where it will be installed, taking the following points into consideration:

- check that the fixing points are adequate to support the weight of the unit;
- pay scrupulous respect to safety distances between the unit and other equipment or structures to ensure that air entering the unit and discharged by the fans is free to circulate.
- The unit must be installed in a space designed to house technical installations dimensioned according to legislation in force in the country concerned and large enough to allow access for maintenance.

POSITIONING

Before handling the unit, check the capacity of the lift equipment used, respecting the instructions on the packaging.

To move the unit in the horizontal, make appropriate use of a lift truck or similar, bearing in mind the weight distribution of the unit. To lift the unit, insert tubes long enough to allow positioning of the lifting slings and safety pins in the special holes in the base of the unit.

To avoid the slings damaging the unit, place protection between the slings and the unit. Place a layer of rubber (min. thickness 10 mm) or vibration dampers between the base and support surface. Fix the unit, making sure it is level and that there is easy access to refrigerant and electrical components. If the site is exposed to strong winds, fix the unit adequately to the support surface using tie rods if necessary.

You are advised to avoid:

- Installing the unit in pits and/or air vents;
- Obstacles or barriers which could cause the air discharged to be recycled;
- Installation in sites with an aggressive atmosphere
- Installation in confined spaces where the sound levels of the appliance could be amplified by reverberation or resonance
- Installation in corners where dust, leaves or other materials tend to collect. These could obstruct the passage of air, thus reducing the efficiency of the unit..
- Air discharged by the unit entering inhabited rooms through doors or windows causing unpleasant conditions for the inhabitants.
- Air discharged by the unit being obstructed by a wind blowing in the opposite direction;
- Direct exposure of the unit to sunlight.

CLEARANCES

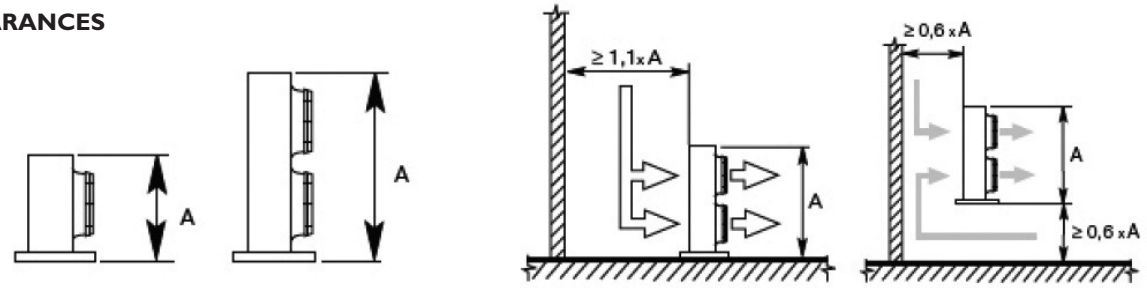

The direct expansion terminals leave the factory completely wired and ready for connection to the mains electricity supply and to the outdoor unit. All electrical connections must be carried out by qualified personnel.
For all electrical work, refer to the electrical wiring diagrams in this manual.
You are also recommended to check

- that the characteristics of the mains electricity supply are adequate for the power values indicated in the electrical characteristics table below, also bearing in mind the possible use of other equipment at the same time.

⚠ **Power to the unit** must be turned on only after installation work (mechanical, refrigerant and electrical) has been completed.
All electrical connections must be carried out by qualified personnel in accordance with legislation in force in the country concerned.
Respect instructions for connecting phase, neutral and earth conductors.
The power line must be fitted with a device to protect from short-circuits and leaks to earth, isolating the installation from other users. This protection device should also act as a main switch and, if not visible from the electrical panel of the unit, should be lockable.
Voltage must be within a tolerance of ±10 of the rated power supply voltage for the unit. If these parameters are not respected, contact the electricity supply company.
For electrical connections, use double insulation cable in conformity with current legislation in the country concerned.
An efficient earth connection is obligatory. Failure to earth the appliance absolves the manufacturer of all liability for damage.

POWER CONNECTIONS

For the functional connection of the unit, bring the power supply cable to the electrical panel inside the unit and connect it to terminals (U) phase, (N) neutral and (PE) earth, including a suitable mains switch with automatic disconnector and residual-current protection between the power supply and the unit.

The **HCAT** condenser units leave the factory fully wired. Installation is limited to connection to the mains electrical supply and connection of the remote (ON/OFF) switch, operations that must be carried out by qualified personnel in compliance with current legislation. For all electrical work, refer to the electrical wiring diagrams in this manual. You are also recommended to check

- that the characteristics of the mains electricity supply are adequate for the power values indicated in the electrical characteristics table below, also bearing in mind the possible use of other equipment at the same time.

⚠ **Power to the unit** must be turned on only after installation work (refrigerant and electrical) has been completed.

All electrical connections must be carried out by qualified personnel in accordance with legislation in force in the country concerned.

Respect instructions for connecting phase, neutral and earth conductors. The power line should be fitted upstream with a suitable device to protect against short-circuits and leakage to earth, isolating the installation from other equipment.

⚠ **Voltage must be within a tolerance of ±10%** of the rated power supply voltage for the unit (for three phase units, the unbalance between the phases must not exceed 3%). If these parameters are not respected, contact the electricity supply company.

For electrical connections, use double insulation cable in conformity with current legislation in the country concerned.

Install, if possible near the unit, an appropriate protection device to isolate the unit from the mains supply. This should have a delayed characteristic curve, contact opening of at least 3 mm and an adequate interruption and differential protection capacity.

If this device is not visible from the electrical panel of the unit, it should be lockable

An efficient earth connection is obligatory. Failure to earth the appliance absolves the manufacturer of all liability for damage.

In the case of three phase units, ensure the phases are connected correctly.

⛔ **Do not use refrigerant pipes** to earth the unit.

ELECTRICAL PANEL

The electrical panel is located inside the unit at the top of the technical compartment where the various components of the refrigerant circuit are also to be found. To access the electrical panel, remove the front panel of the unit by undoing the self-tapping screws. To access the components in the electrical panel and the terminal boards, undo the four screws on the panel itself.

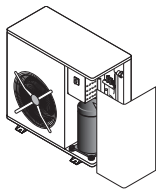

ELECTRICAL WIRING DIAGRAM ON THE MACHINE

Only for the machines with 48VDC power supply:
Must protect the 48 VDC power supply with a bipolar thermal Overload switch.
(The negative and even the positive)

PREPARING FOR FIRST START UP

Before starting up the condenser units, make sure that:

- all safety conditions have been respected.
- The condenser unit is adequately fixed to the surface it rests on.
- Functional distances have been respected.
- The refrigerant connections have been carried out as indicated in the instruction manual.
- The circuit has been vented.
- The refrigerant circuit valves are open.
- electrical connections have been carried out correctly.
- voltage is within a tolerance of 10% of the rated voltage for the unit.
- the unit is correctly earthed.
- All electrical connections are tight and all refrigerant connections have been carried out correctly.

  Before starting up, power up the unit for at least two hours by positioning QF and QS to ON, to allow the oil in the compressor sump to heat up.

STARTING UP FOR THE FIRST TIME (after two hours)

Before activating the condenser unit:

- Make sure the remote mains switch QF is in the OFF position;

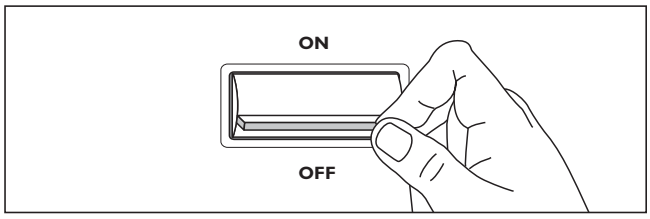

- Remove the inspection panel;

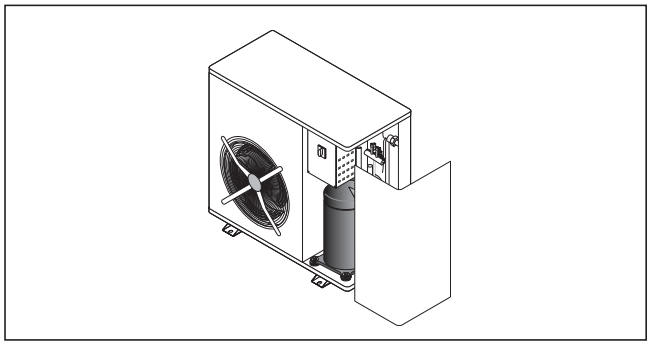

- Remove the door of the electrical panel, setting QS to OFF;

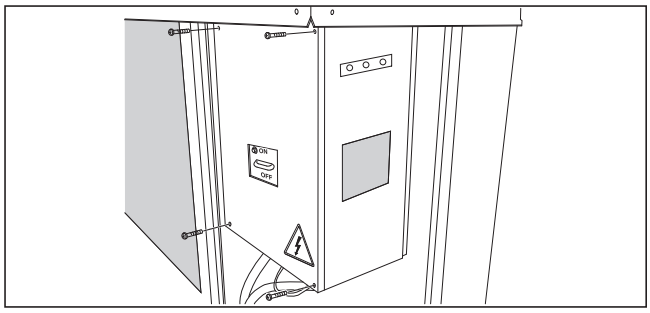

- Place the compressor thermal overload switch QM1 in the ON position;

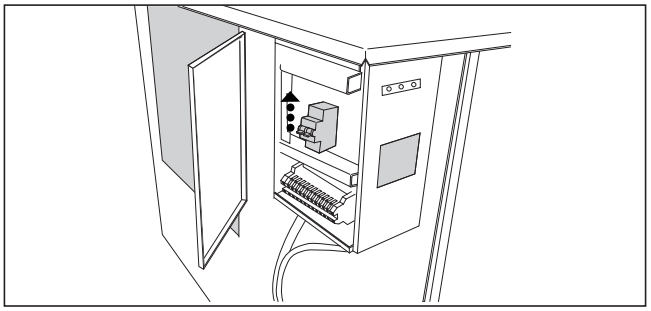

- Close the electrical panel and tighten the closing screws;
- Position the main unit switch QS in the ON position;

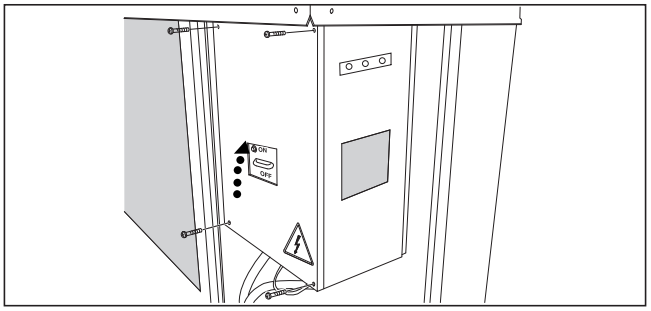

- Replace the inspection panel

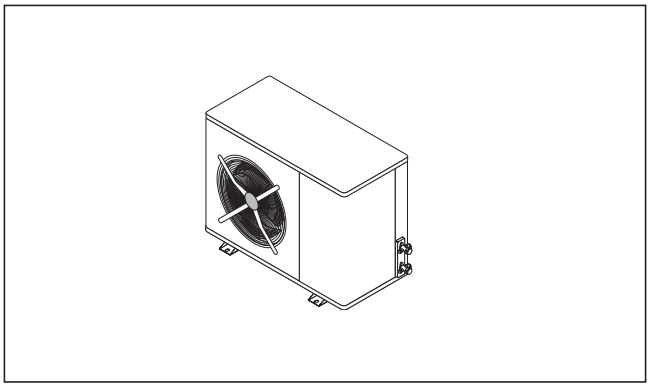

- Position the main unit switch QF (on the outside of the appliance) in the "ON" position

ACTIVATING AND DEACTIVATING THE UNIT

- Place the remote switch SA1 (if present) in the ON position.

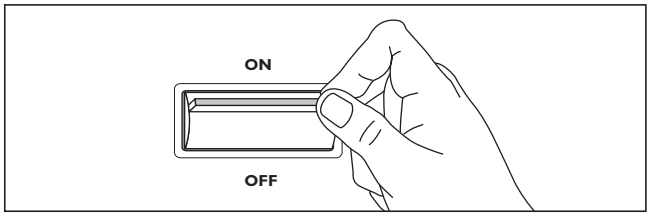

- The ACTIVATION and DEACTIVATION operations are controlled by the combined HED indoor unit.

POWER INPUT OF THE INDIVIDUAL COMPONENTS																
		COMPRESSOR R410A			EVAPORATOR FAN AC power input			EVAPORATOR FAN 48 V DC power input			CONDENSER FAN			ELECTRIC HEATER		
Model	Power input	F.L.I.	F.L.A.	L.R.A.	Nr.	F.L.I.	F.L.A.	Nr.	F.L.I.	F.L.A.	Nr.	F.L.I.	F.L.A.	N°	F.L.I.	F.L.A.
	V/Ph/Hz	kW	A	A		kW	A		kW	A		kW	A		kW	A
0011	230/1/50	1,9	8,5	39	1	0,4	1,9	1	0,6	11,5	1	0,2	0,7	1	1,7	7,4
0021	230/1/50	2,7	16,0	58	1	0,4	1,9	1	0,6	11,5	1	0,2	0,7	1	1,7	7,4
0031	230/1/50	3,4	17,1	67	1	0,4	1,9	1	0,6	11,5	1	0,2	0,7	1	1,7	7,4
0031	400/3N/50	3,5	6,0	35	1	0,4	1,9	1	0,6	11,5	1	0,2	0,7	1	1,7	7,4
0041	400/3N/50	3,7	7,0	46	1	0,5	2,1	1	1,1	19,5	1	0,1	0,6	2	3,4	14,8
0051	400/3N/50	4,3	8,0	48	1	0,5	2,1	1	1,1	19,5	1	0,1	0,6	2	3,4	14,8
0056	400/3N/50	5,9	10,0	64	1	0,5	2,1	1	1,1	19,5	1	0,3	1,4	2	3,4	14,8
0061	400/3N/50	5,9	11,8	64	2	0,5	2,1	2	1,1	19,5	1	0,3	1,4	2	3,4	14,8

TOTAL UNIT POWER INPUT (HED+HCAT) R410A													
		COOLING ONLY, with EVAPORATOR FAN AC power input			COOLING ONLY, with EVAPORATOR FAN AC power input and ELECTRIC HEATER		COOLING ONLY, with EVAPORATOR FAN 48V DC power input			COOLING ONLY, with EVAPORATOR FAN 48 V DC power input and ELECTRIC HEATER		48V DC POWER SUPPLY (EVAP. FAN + FREE COOLING DAMPER + ELECTRIC BOARD)	
Model	Power input	F.L.I.	F.L.A.	S.A	F.L.I.	F.L.A.	F.L.I.	F.L.A.	S.A	F.L.I.	F.L.A.	F.L.I.	F.L.A.
	V/Ph/Hz	kW	A	A	kW	A	kW	A	A	kW	A	kW	A
0011	230/1/50	2,5	11,1	41,6	2,1	9,3	2,1	9,2	39,7	1,7	7,4	0,6	11,9
0021	230/1/50	3,3	18,6	60,6	2,1	9,3	2,9	16,7	58,7	1,7	7,4	0,6	11,9
0031	230/1/50	3,9	19,7	69,6	2,1	9,3	3,5	17,8	67,7	1,7	7,4	0,6	11,9
0031	400/3N/50	4,0	8,6	37,6	2,1	9,3	3,6	6,7	35,7	1,7	7,4	0,6	11,9
0041	400/3N/50	4,3	9,7	48,7	3,9	16,9	3,9	7,6	46,6	3,4	14,8	1,1	19,9
0051	400/3N/50	4,9	10,7	50,7	3,9	16,9	4,4	8,6	48,6	3,4	14,8	1,1	19,9
0056	400/3N/50	6,7	13,5	67,5	3,9	16,9	6,2	11,4	65,4	3,4	14,8	1,1	19,9
0061	400/3N/50	6,7	15,3	67,5	3,9	16,9	6,3	13,2	65,4	3,4	14,8	1,1	19,9

CONNECTING THE REFRIGERANT PIPES FOR HED UNIT

SUCTION/DISCHARGE PIPES

Create the coupling flange directly on the pipe; this means less welding and therefore fewer impurities inside the piping. All pipes must be perfectly clean (clean piping with nitrogen or dry air before connecting the pipes to the two units) and free from moisture to allow efficient venting..

To connect liquid pipe, proceed as follows:

1. Connect the pipe to the liquid union coupling using two spanners.
2. Insulate the outside of the pipe and the coupling.

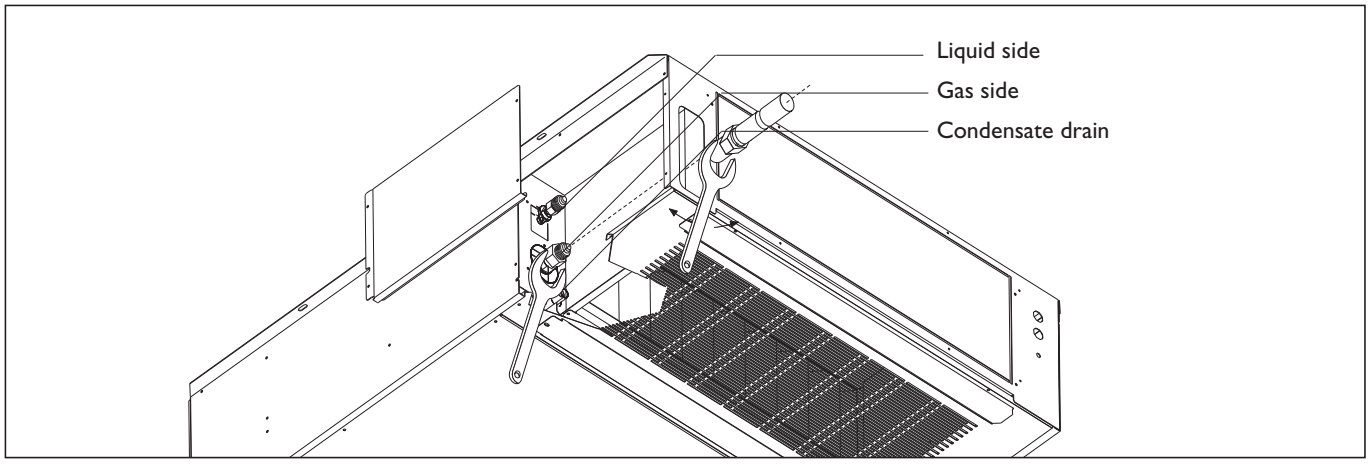

REFRIGERANT PIPES

Sizing of the refrigerant pipes connecting the external condenser units and indoor evaporator units is vital to guarantee correct operation.
Next tables give diameters the diameters of pipes for connecting the **HED-HCAT** units, the maximum admissible length and the maximum difference in level, both with the condenser unit located at a lower level than the terminal unit and vice versa.

For greater distances, the diameter must be calculated.
Use only copper piping for refrigerant use.

The **HCAT** units are pre-filled with a sufficient quantity of refrigerant for connection to the corresponding HED indoor unit and for a maximum pipe length of 5 m.

PROCEDURE FOR CORRECT CONNECTION

Intake/discharge piping

1. Insulate the piping adequately with anti-condensate "closed cell" type polyethylene to a minimum thickness of 9 mm. Remote on/off.
2. If the outdoor unit is lower than the indoor unit, a drain trap must be fitted to avoid fluid returning towards the compressor (see Fig. 1).
3. If the outdoor unit is higher than the indoor unit by less than 3 m, it is sufficient to fit an air trap before the indoor unit (see Fig. 2).
4. If the outdoor unit is higher than the indoor unit by more than 3 m, an oil collection trap should be fitted every 3 m and an air trap should be included before the indoor unit (see Fig. 3).
5. When installing the piping, make sure all bends have a large radius. Avoid hairpins. Do not squash the pipes.

Liquid piping

1. Avoid using excessive diameters to avoid excessive refrigerant content.
2. If the piping is exposed to heat sources, insulate it appropriately.

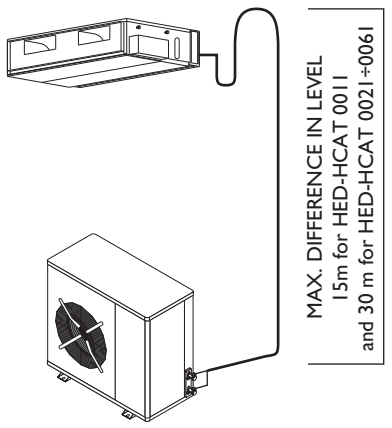

Fig. 1

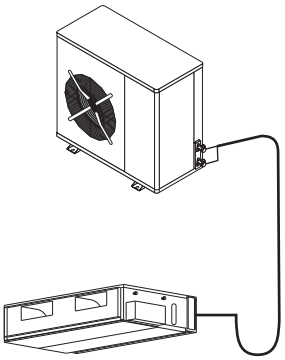

Fig. 2

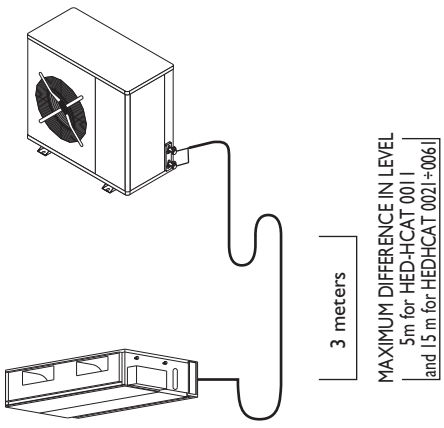

Fig. 3

FITTINGS								
Model		**0011**	**0021**	**0031**	**0041**	**0051**	**0056**	**0061**
HED unit								
Liquid line	mm	3/8"	3/8"	3/8"	1/2"	1/2"	1/2"	1/2"
Suction / discharge line	mm	5/8"	5/8"	5/8"	3/4"	3/4"	3/4"	3/4"
HCAT unit								
Liquid line	mm	3/8"	3/8"	3/8"	1/2"	1/2"	1/2"	1/2"
Suction / discharge line	mm	5/8"	5/8"	5/8"	3/4"	3/4"	3/4"	3/4"

SIZING CONNECTION PIPING IN RELATION TO EQUIVALENT DISTANCE								
Model		**0011**	**0021**	**0031**	**0041**	**0051**	**0056**	**0061**
0-30 m equivalent								
Liquid line	mm	3/8"	3/8"	3/8"	1/2"	1/2"	1/2"	1/2"
Suction / discharge line	mm	5/8"	5/8"	5/8"	3/4"	3/4"	3/4"	3/4"

SIZING CONNECTION PIPING IN RELATION TO EQUIVALENT DISTANCE								
Model		**0011**	**0021**	**0031**	**0041**	**0051**	**0056**	**0061**
30-50 m equivalent								
Liquid line	mm	N.A.	3/8"	3/8"	1/2"	1/2"	1/2"	1/2"
Suction / discharge line	mm	N.A.	5/8"	5/8"	3/4"	3/4"	3/4"	3/4"

TYPE OF FITTINGS							
Model	**0011**	**0021**	**0031**	**0041**	**0051**	**0056**	**0061**
HED unit	flare	flare	flare	flare	flare	flare	flare
HCAT unit	flare	flare	flare	flare	flare	flare	flare

ADDITIONAL REFRIGERANT LOAD (FOR EVERY LINEAR METER EXCEEDING 5 m)						
Diameter		**3/8"-10**	**1/2"-12**	**5/8"-16**	**3/4"-18**	**7/8"-22**
Liquid line	g/m	59	90	160	-	-
Suction / discharge line	g/m	-	-	29	39	64

N.B.: add lubricating oil equivalent to 10% of the weight of the gas calculated only for the refrigerant connection lines between indoor and outdoor unit.

EQUIVALENT CORRESPONDING LENGTH, 90° CURVE AND COMPLETE DRAIN TRAP

Nominal diameter (mm)	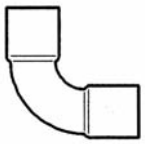 **90°**	**45°**	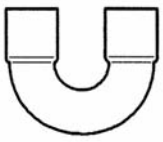 **180°**	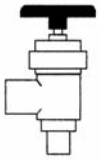 **90°**	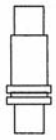
12	0,50	0,25	0,75	2,10	1,90
14	0,53	0,26	0,80	2,20	2,00
16	0,55	0,27	0,85	2,40	2,10
18	0,60	0,30	0,95	2,70	2,40
22	0,70	0,35	1,10	3,20	2,80
28	0,80	0,45	1,30	4,00	3,30

INTAKE PIPING

Flared couplings are used for all models. To connect, proceed as follows:

1. Prepare the end of the pipe, creating the correctly shaped flare.
2. Connect the prepared pipe to the intake pipe shut-off valve using two spanners as shown in the figure below.

LIQUID PIPING

Flared couplings are used for all models. To connect, proceed as follows:

1. Prepare the end of the pipe, creating the correctly shaped flare.
2. Connect the prepared pipe to the liquid pipe shut-off valve using two spanners as shown in the figure below..

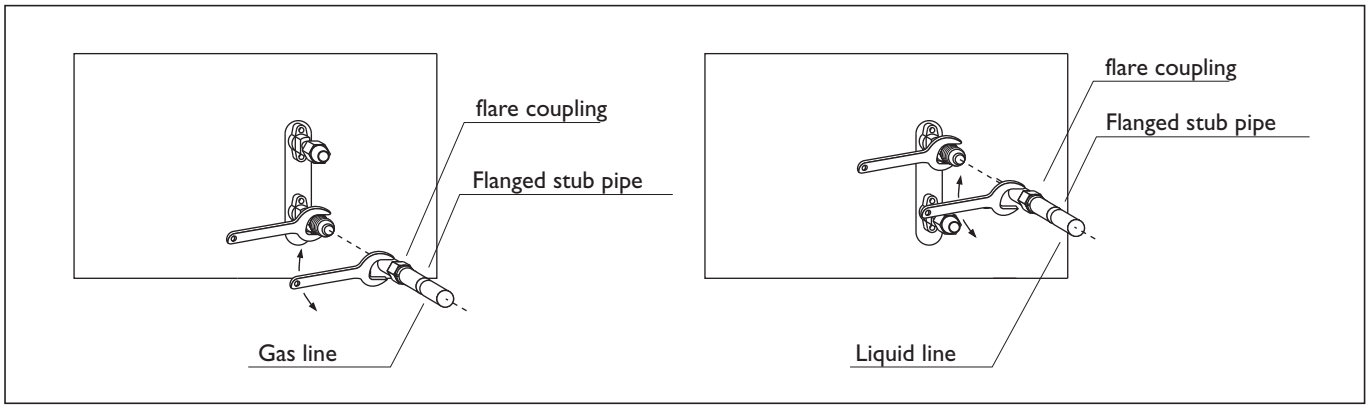

Note: The use of a flare connected directly to the piping limits impurities inside the pipe. All pipes must be perfectly clean (clean piping with nitrogen or dry air before connecting the pipes to the two units) and free from moisture to allow efficient venting.

CHECKING FOR LEAKS

1. Check that the valves on the outdoor unit are completely closed.
2. Connect the pressure gauge to the service outlet of the two outdoor unit valves.
3. Fill with freon R410A gas at a pressure of 250 kPa.
4. Connect the nitrogen cylinder to the valves and bring the circuit up to a pressure of 1,200 kPa.
5. Using a leak detector light or other electronic instrument, make sure there are no leaks. When complete, remove the pressure within the pipework..

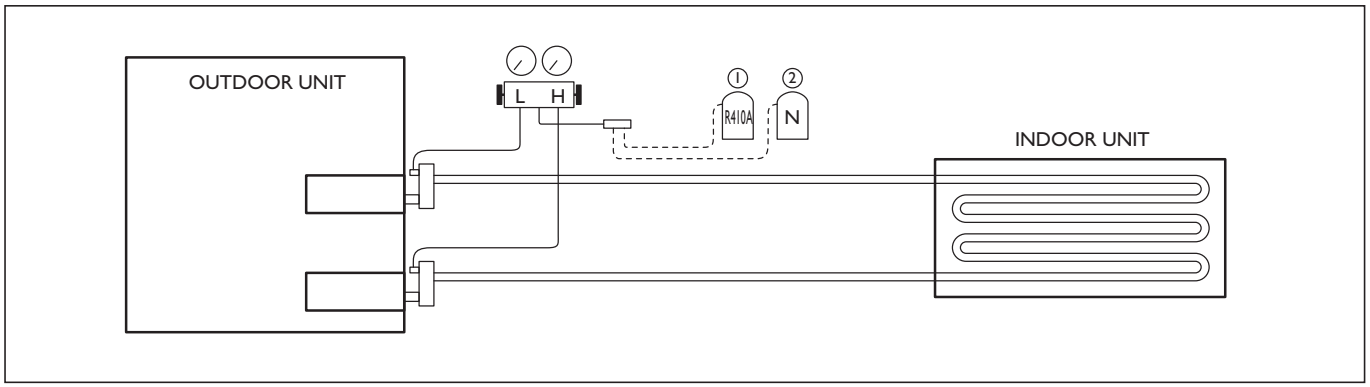

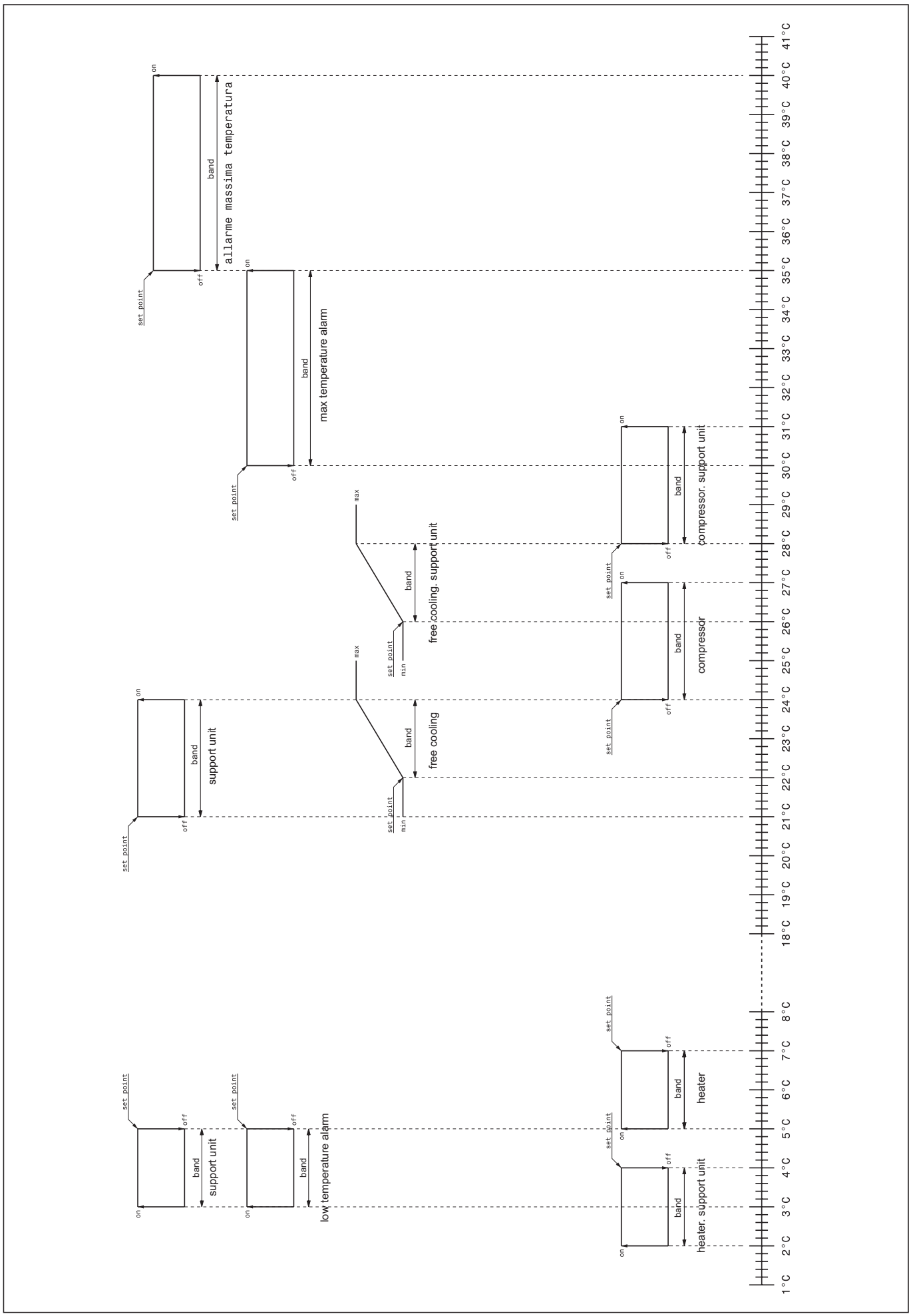
1°C 2°C 3°C 4°C 5°C 6°C 7°C 8°C 18°C 19°C 20°C 21°C 22°C 23°C 24°C 25°C 26°C 27°C 28°C 29°C 30°C 31°C 32°C 33°C 34°C 35°C 36°C 37°C 38°C 39°C 40°C 41°C
set point
on
off
band
support unit
low temperature alarm
heater. support unit
heater
free cooling
free cooling. support unit
max
min
compressor
compressor. support unit
max temperature alarm
allarme massima temperatura

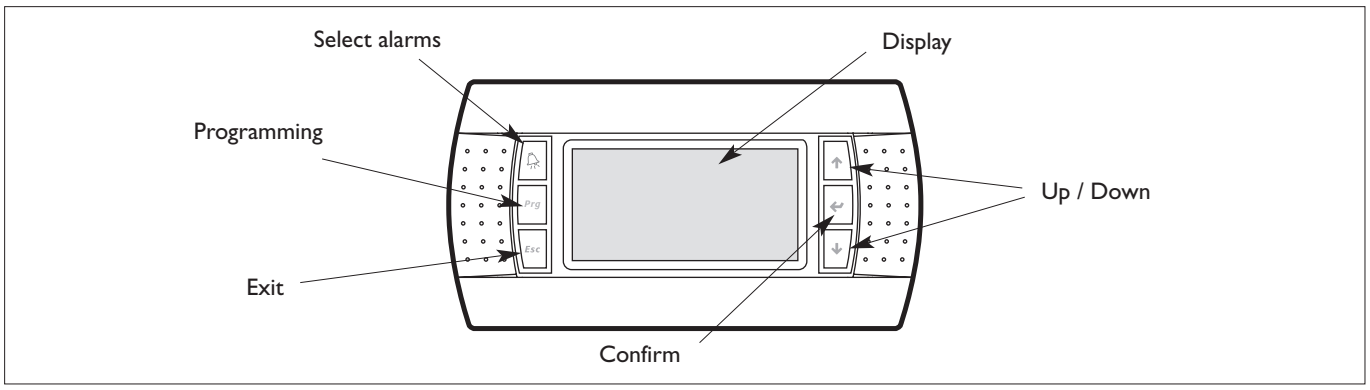

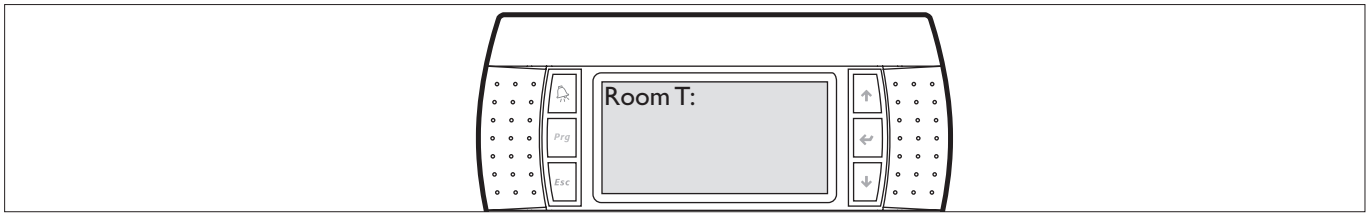

Display
The display shows the main values managed by the unit.

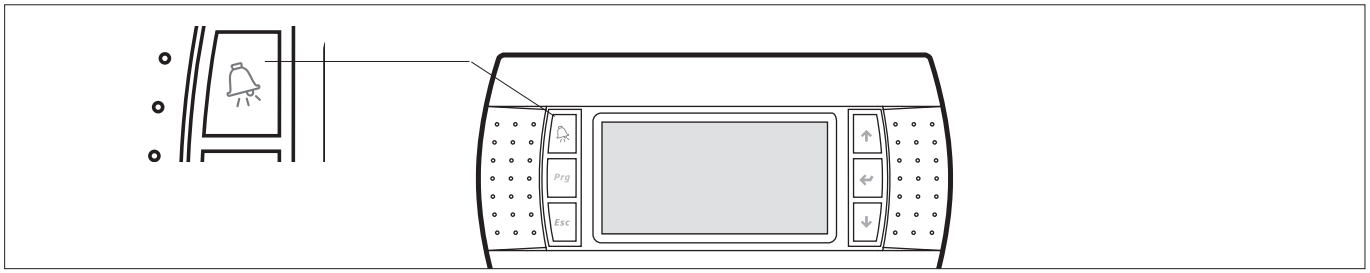

Alarms
Alarms are signalled by the light on the alarm button. Pressing the button displays the details of the causes of alarm.
To reset the alarms, press the alarm button again.
The controller saves up to 100 alarms.

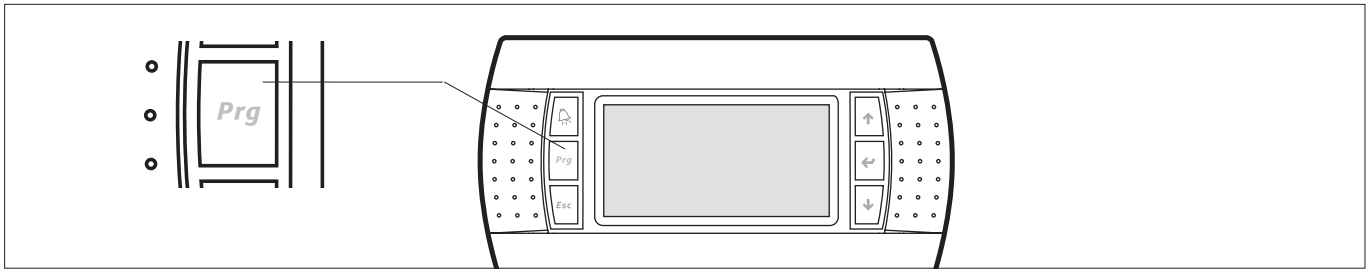

Displaying and setting the unit parameters
Pressing the Prg button and entering the password accesses the menu for setting the parameters.
The operating parameters are sub-divided into the following levels:
- Level 1 (incorrect PSW): general unit status, alarms and graphs.
- Level 2 (user PSW required): USER MENU (0000).
- Level 3 (maintenance PSW required): MAINTENANCE MENU.

FIRST PAGE

Menu structure: the pages in the main loop are scrolled using the UP and DOWN buttons.

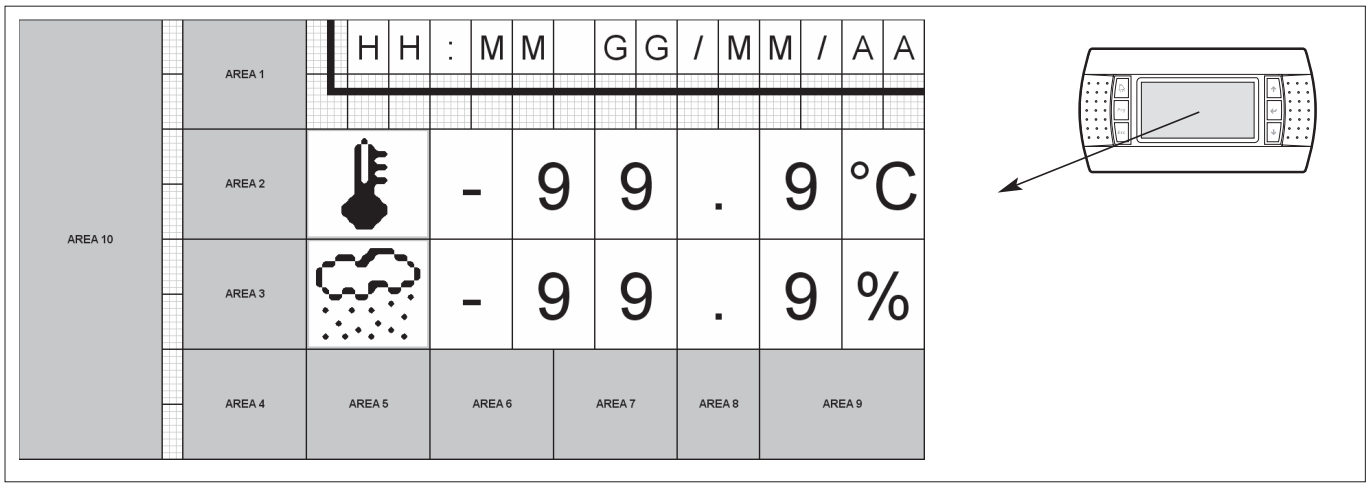

If the clock is fitted and operating, the time and date are displayed.
If an analogue input is configured as the room temperature, this is displayed.
If an analogue input is configured as the room humidity, this is displayed.

AREA 1: this displays the general status of the unit.

OFF	Unit off		Unit on and fan off		Unit on and fan on
	Unit on and air-conditioner 1 fan active		Unit on and air-conditioner 2 fan active		Unit on and air-conditioner 1 and 2 fan active

AREA 2: this displays the detailed status of the unit.

	Active alarm		Maintenance signal		Manual controls active
	Unit off from keypad		Unit off from digital input		Unit off from time bands
	Unit off from supervisor		Unit in emergency mode		Unit in night mode
	Unit on in LAN due to high room temperature		Unit on in LAN due to low room temperature	WAIT	Unit awaiting LAN
	Unit on in LAN				

AREA 3: this displays an icon that, in the event of an alarm or a maintenance signal, indicates the type of alarm or the device that requires maintenance respectively.

	Configuration alarm		Fire/smoke/flood alarm		Fire/smoke alarm
	Flood alarm		Outlet fan flow alarm		Outlet fan thermal overload alarm
	Blackout /incorrect phase sequence alarm		High pressure alarm from digital input/analogue input		Low pressure alarm
1 2	Compressor alarm on air-conditioner 1 and 2	2	Compressor alarm on air-conditioner 2	1	Compressor alarm on air-conditioner 1
	Condenser fan thermal overload alarm		Heater alarm		Blocked filter alarm
	Damper alarm		EPROM alarm		Room temperature probe alarm
	Outside temperature probe alarm		Outlet temperature probe alarm		Room humidity probe alarm
bar	Condensing pressure probe alarm		LAN disconnected alarm		Maximum room temperature alarm

	High room temperature alarm		Low room temperature alarm		High room humidity alarm
	Low room humidity alarm		Room thermostat alarm	AUX	Auxiliary alarm
	Clock alarm		Compressor maintenance		Outlet fan maintenance
	Condenser fan maintenance		Compressor maintenance, air-conditioner 1 and 2		Compressor maintenance, air-conditioner 2
	Compressor maintenance, air-conditioner 1		Outlet fan maintenance air-conditioner 1 and 2		Outlet fan maintenance, air-conditioner 2
	Outlet fan maintenance, air-conditioner 1				

AREA 4: this displays the unit operating mode, heating or cooling, if the outlet fan temperature control function is enabled.

	Unit in cooling mode		Unit in heating mode		Fan temperature control not active

AREA 5: all the devices currently operating are displayed.

	Compressor active		Air-conditioner 1 compressor active		Air-conditioner 2 compressor active
	Air-conditioner 1 and 2 compressor active				

AREA 6: all the devices currently operating are displayed.

	Heater active		Air-conditioner 1 heater active		Air-conditioner 2 heater active.
	Air-conditioner 1 and 2 heaters active				

AREA 7: all the devices currently operating are displayed.

	Dehumidification active		Emergency fan active		

AREA 8: this displays the Unit LAN address.

LAN 1	Unit LAN address				

AREA 9: if the ON/OFF from keypad option is enabled, this displays the corresponding icon.

OFF	Press ENTER for 5 seconds to switch the unit off	ON	Press ENTER for 5 seconds to switch the unit on		

AREA 10: this displays the layout of the unit.

	Packaged unit without freecooling		Packaged unit with freecooling closed, inside air recirculation		Packaged unit with freecooling 50%, inside/outside air mixture
	Packaged unit with freecooling open, full outside air		Split unit without freecooling		Split unit with freecooling closed, inside air recirculation
	Split unit with freecooling 50%, inside/outside air mixture		Split unit with freecooling open, full outside air		

SECOND PAGE

This displays the values of the analogue inputs enabled, identified by icons.

	Room air temperature		Outlet air temperature		Outside air temperature
	Room air humidity	bar	Condensing pressure		

THIRD PAGE

This shows the set point and band for all the devices enabled, identified by icons.

	Outlet fan temperature control in cooling		Outlet fan temperature control in heating		Freecooling
	Compressor		Heaters		Dehumidification
	Compressor 1		Compressor 2		Heater 1
	Heater 2		Emergency fan		

FOURTH PAGE

This shows information relating to the software and hardware.

NOTE:

LANGUAGE SETTING		Press both bottom at the same time, then select your own language			
TO CHANGE THE DISPLAY CONTRAST		Press at the same time			To adjust (up or down) the contrast

DISPLAY SCREENS

MAIN LOOP

FIRST PAGE

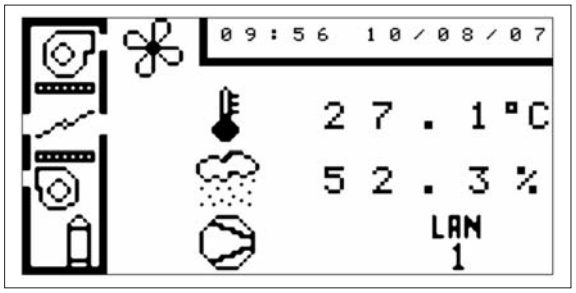

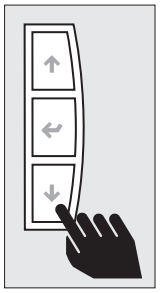

Press the button displays the following status screens in sequence.

SECOND PAGE

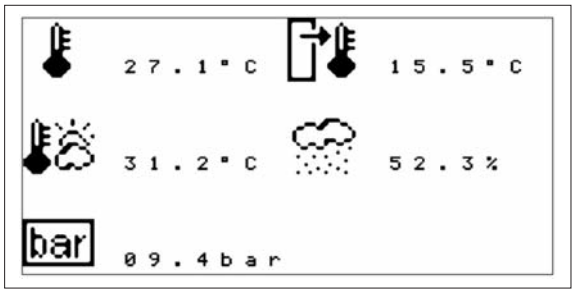

THIRD PAGE

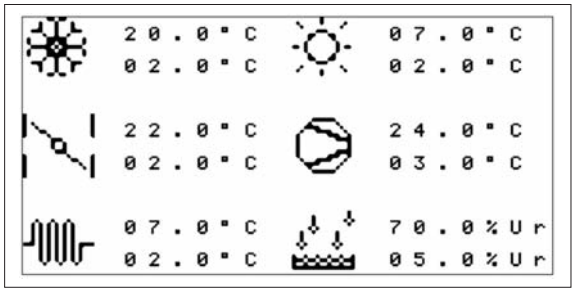

1 unit controlled by the electrical panel controller

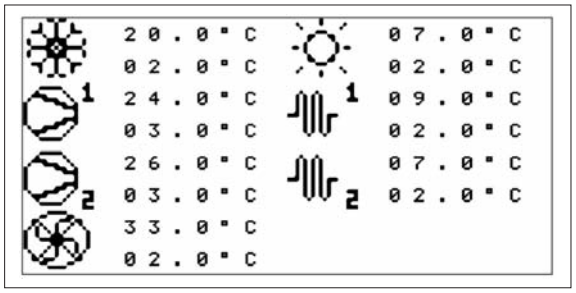

2 units controlled by the electrical panel controller

FOURTH PAGE

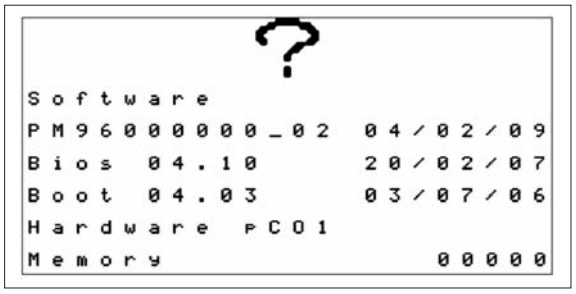

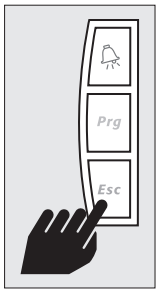

Press the *Esc* button repeatedly to return to the main menu.

PASSWORD ENTRY

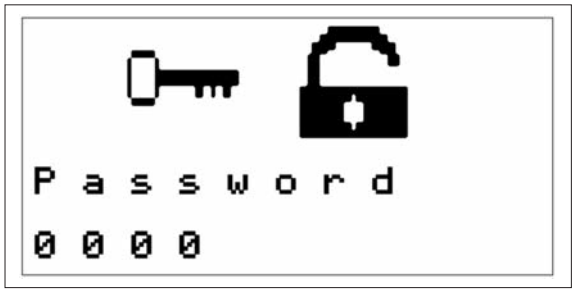

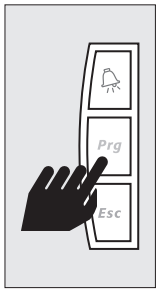

Secondary loop

Pressing the *Prg* button accesses the password entry page. Depending on the password entered, 3 loops of screens may be enabled:
level 0 - incorrect password;
level 1 - user password 0000 (modifiable);
level 2 - maintenance password (modifiable);

Main screen

Press together for 5 seconds → The language can be changed

Press the Prg button

Password not correct **LEVEL 0**	User password 0000 (modifiable) **LEVEL 1**	Maintenance password Contact Climaveneta **LEVEL 2**
Displays only:	Displays:	Displays:
A Status	**A Stati**	**A Status**
Digital 1	Digital 1	Digital 1
Digital 0	Digital 0	Digital 0
Analogue 1	Analogue 1	Analogue 1
Analogue 0	Analogue 0	Analogue 0
Operating hours	Operating hours	Operating hours
pLAN network	pLAN network	pLAN network
B Alarm log	**B Alarm log**	**B Alarm log**
C Graphs	**C Graphs**	**C Graphs**
	D Clock	**D Clock**
	E User	**E User**
	Fan	Fan
	Freecooling	Freecooling
	Compressor	Compressor
	Heater	Heater
	Dehumidification	Dehumidification
	Alarms	Alarms
	pLAN network	pLAN network
	Set password	Set password
		F Maintenance
		Analogue 1
		Operating hours
		Manual alarms
		Password

LEVEL 0

A ALARM LOG

```
Status
Digital I
Digital O
Analogue I
Analogue O
Operating Hours
pLAN
```

The inputs are already configured during production of the unit. Before changing any settings, contact the office.

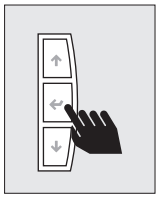

To change the value press ↵.

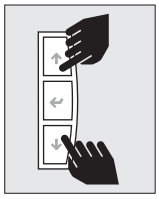

To change the value press ↑ and ↓.

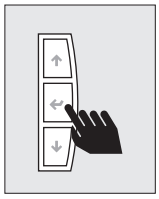

Confirm by pressing ↵.

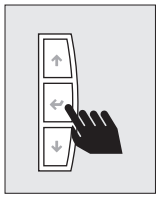

To move to the next row press ↵.

STATUS	
Digital I	Screen displaying the status of the digital inputs
Digital O	Screen displaying the status of the digital outputs
Analogue I	Screen displaying the status of the analogue inputs
Analogue O	Screen displaying the status of the analogue outputs
Operating hours	Screen displaying the device operating hours
pLAN	Screen displaying the status of the pLAN network

Digital I

A1

```
1 : Low  Pressure
2 : High  Pressure
3 : Air  Flow
4 : Air  Filter
5 : P.  Supply/Phases
6 : Amb.  Thermostat
7 : External  Alarm
8 : Fire/Smoke  Alarm
```

Possible configurations of the digital inputs

Value	Description
0	Not used
1	Low pressure switch
2	High pressure switch
3	Outlet fan thermal overload
4	Condenser fan thermal overload
5	Heater thermal overload
6	Outlet fan flow
7	Outlet fan filters blocked
8	230/400Vac power connected and incorrect phase sequence
9	Room thermostat
10	External alarm
11	Fire/smoke alarm
12	Flood alarm
13	Flood and fire/smoke alarm
14	Remote ON/OFF
15	Remote ON impulse
16	Remote OFF impulse
17	Air-conditioner 1 alarm
18	Air-conditioner 2 alarm
19	Air-conditioner 1 compressor on
20	Air-conditioner 2 compressor on
21	Enable freecooling

DIGITAL O

A2

```
1 : Alarm  1
2 : Alarm  2
3 : Alarm  3
4 : Alarm  4
5 : Alarm  5
6 : Alarm  6
7 : Compressor
8 : Heater
```

Possible configurations of the digital outputs

Value	Description
0	Not used
1	Alarm 1 control
2	Alarm 2 control
3	Alarm 3 control
4	Alarm 4 control
5	Alarm 5 control
6	Alarm 6 control
7	Alarm 7 control
8	Open freecooling damper control
9	Close freecooling damper control
10	Outlet fan control
11	Condenser fan control
12	Compressor control
13	Dehumidification control
14	Electric heater control
15	Compressor status
16	Outlet fan status
17	Freecooling status
18	Heater status
19	Air-conditioner 1 fan control
20	Air-conditioner 2 fan control
21	Air-conditioner 1 compressor control
22	Air-conditioner 2 compressor control
23	Air-conditioner 1 heater control
24	Air-conditioner 2 heater control
25	Unit status

ANALOGUE I

A3

```
1:Pressure        012.8bar
2:Humidity        054.2%Ur
3:T.Room          027.3°C
4:T.Delivery      018.1°C
5:T.Ambient       018.3°C
```

Pressure
Humidity
Room T.
Outlet T.
Outside T.

ANALOGUE O

A4

```
1:Open FC          015%
2:Main Fan         100%
3:Cond Fan         000%
4:Not Used         000%
```

Open FC
Outlet fan
Cond. fan
Not used

Operating hours

A5

```
Main Fan           000000h
Compressor         000000h
Start Up Compr.    0000
Cond Fan           000000h
Heater             000000h
Free Cooling       000000h
```

This screen is displayed in systems with:
1 unit controlled by one PLC

A6

```
Main Fan     1     000000h
Main Fan     2     000000h
Compressor   1     000000h
Compressor   2     000000h
Start Up Compr.1   0000
Start Up Compr.2   0000
```

This screen is displayed in systems with:
2 units controlled by the same PLC

A7

```
Heater 1           000000h
Heater 2           000000h
Free Cooling       000000h
```

This screen is displayed in systems with:
2 units controlled by the same PLC

pLAN network

A8

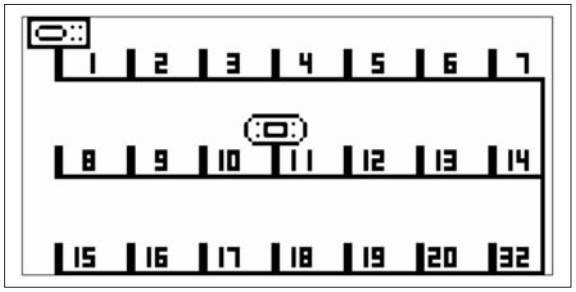

pLAN network status screen
This screen, only active if the LAN is enabled, displays the status of the units connected in the pLAN network.
Addresses 1 to 10 are used for controllers, addresses 11 to 20 for private terminals, and address 32 for the shared terminal.

B ALARM LOG

ALARM LOG screen

In this screen this displays the alarm log.
A maximum of 100 events can be saved, once having reached the one hundredth alarm, i.e. the last space available in the memory, the next alarm is saved over the oldest alarm (001), which is deleted, and so on for subsequent.
To scroll the list of logged alarms press ↑/↓.

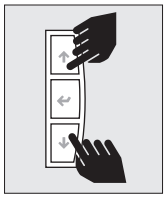

List of alarms

Reset memory
AC 1 fan hour threshold
AC 2 fan hour threshold
AC 1 comp. hour threshold
AC 2 comp. hour threshold
Fan hour threshold
Compressor hour threshold
Clock
Auxiliary
Room thermostat
Low humidity
High humidity
Low temperature
High temperature
Maximum temperature
pLAN network
Pressure probe
Humidity probe
Outlet temp. probe
Outside temp. probe
Room temp. probe
EPROM
Freecooling damper
Dirty filters
Heater thermal overload
Fan thermal overload
AC 1 compressor
AC 2 compressor
Low pressure
High pressure A (Analogue)
High pressure D (Digital)
No power
Fan thermal overload
No flow
Flood
Fire/smoke
Flood Fire/smoke
DA CFG (Digital/Analogue configuration)
AO CFG (Analogue Output configuration)
DO CFG (Digital Output configuration)
AI CFG (Analogue Input configuration)
DI CFG (Digital Input configuration)
Reset log

C GRAPHS

C1

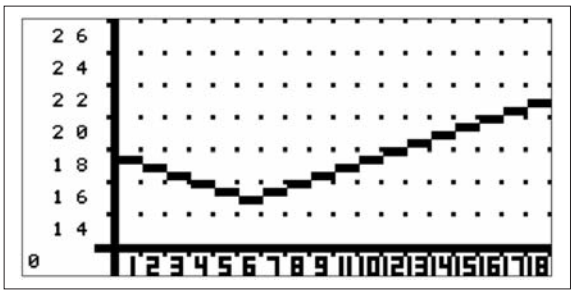

GRAPHS screens

The first screen displays a graph showing the trend in room air temperature, the screen is enabled if an analogue input is configured as the room air temperature reading.

C2

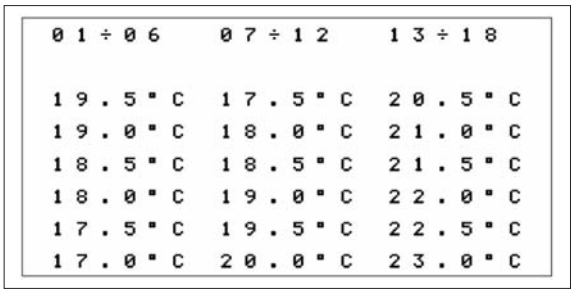

Note: The second screen displays the logged values (temperature only)

LEVEL I

- **Status**
- **Alarm log**
- **Graphs**
- **Clock**

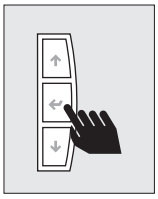

To change the value press ↵.

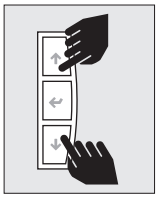

To change the value press ↑ and ↓.

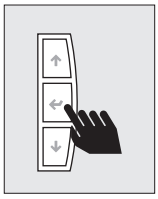

Confirm by pressing ↵.

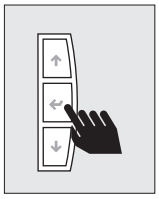

To move to the next row press ↵.

D CLOCK

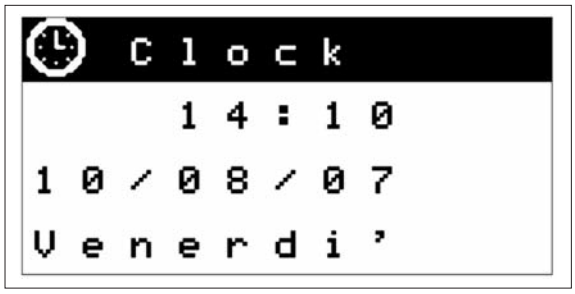

CLOCK screen

This screen is used to set the time and date.

E USER

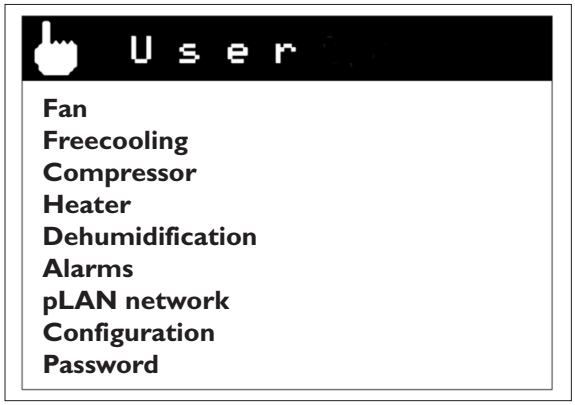

The set points for all the resources can be set in the USER level.

USER	
Fan	Screens for setting the main fan operating parameters
Freecooling	Screens for setting the freecooling operating parameters
Compressor	Screen for setting the compressor operating parameters
Heater	Screen for setting the heater operating parameters
Dehumidification	Screen for setting the dehumidification operating parameters
Alarms	Screens for setting the alarm parameters
pLAN network	Screen for setting the pLAN network parameters
Configuration	Screen for setting the configuration parameters
Password	Screen for setting the level I password

The loops of screens are displayed if the corresponding devices are enabled.

Fan

E1

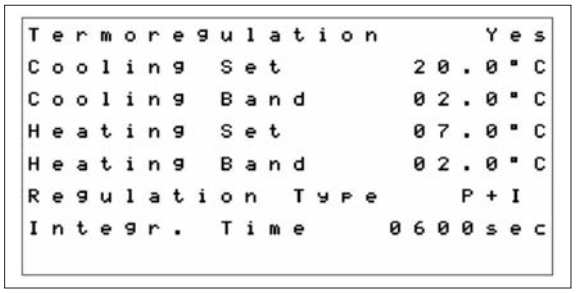

Fan digital control

Temperature control:	with temperature control the fan switches on and off depending on the value of the heating and cooling set point. YES / NO
Cooling set point:	used to set the cooling set point temperature.
Cooling band:	used to set the band in cooling mode.
Heating set point:	used to set the heating set point temperature.
Heating band:	used to set the band in heating mode.
P+I control:	used to choose between proportional or proportional-integral control (in the latter control depends on the time set).
Integral time:	used to set the time for proportional-integral control.

E2

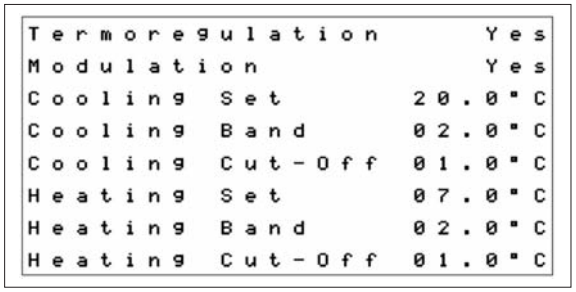

Fan analogue control

Temperature control:	with temperature control the fan switches on and off depending on the value of the heating and cooling set point. YES / NO
Modulation:	enables modulating operation of the fan.YES / NO
Cooling set point:	used to set the cooling set point temperature.
Cooling band:	used to set the band in cooling mode.
Cooling cut-off:	used to set the temperature in the shut-down phase in cooling mode.
Heating set point:	used to set the heating set point temperature.
Heating band:	used to set the band in heating mode.
Heating cut-off:	used to set the temperature in the shut-down phase in heating mode.

E3

```
Recirculation        100%
Compressor           100%
Heater               100%
Free Cooling         100%
Deumidify      Yes   050%
Regulation Type      P+I
Integr. Time     0600sec
Start-Up Time      02sec
```

Fan non-modulating analogue control
If selecting modulating NO this screen is displayed with the fixed parameters.

E4

```
Min. Cooling         030%
Max. Cooling         100%
Min. Heating         030%
Max. Heating         100%
Deumidify      Yes   050%
Start-Up Time      00sec
Regulation Type      P+I
Integr. Time     0600sec
```

Fan modulating analogue control
If selecting modulating YES this screen is displayed with the values that can be set for the fan.

Minimum cooling:	used to set the minimum fan speed in cooling mode.
Maximum cooling:	used to set the maximum fan speed in cooling mode.
Minimum heating:	used to set the minimum fan speed in heating mode.
Maximum heating:	used to set the maximum fan speed in heating mode.
Dehumidification:	enables the dehumidification function.
Start-up time:	used to set the delay in starting the fan.
P+I control:	used to choose between proportional or proportional-integral control (in the latter control depends on the time set).
Integral time:	used to set the time for proportional-integral control.

E5

```
ON-OFF Fan Cicles    Yes
ON Fan            00060sec
OFF Fan           00900sec
```

Sniffing:	allows of switch on / turn off the fan per a time determined.
Fan ON:	used to set the fan on time.
Fan OFF:	used to set the fan off time.

E6

```
Air Conditioner 1 - 2
Rotation Time Hours  24
Rotation Test         No
```

This screen is displayed in systems with:
2 units controlled by the controller

Rotation hours:	used to set the hours for master and slave rotation.
Rotation test:	used to set the minutes to test the operation of master / slave rotation

Freecooling

E7

```
Set Point          22.0°C
Band               02.0°C
Min.                 000%
Max.                 100%
Regulation Type      P+I
Integr. Time     0600sec
Modulation FC         Yes
```

Page 1

Set point:	used to set the temperature per the opening of the freecooling damper.
Band:	used to set the band.
Minimum:	used to set the minimum damper opening.
Maximum:	used to set the maximum damper opening.
P+I control:	used to choose between proportional or proportional-integral control (in the latter control depends on the time set).
Integral time:	used to set the time for proportional-integral control
FC Modulating:	used to set the damper in modulating mode. YES / NO

E8

```
Delta In/Out       03.0°C
Band DT            01.0°C
FC With Compressor    No
Delay            0180sec
Delivery Limit        Yes
Min. Temp.         14.0°C
Band               04.0°C
```

Page 2

In/out delta:	used to set the delta between the inside temperature and the outside temperature for opening the freecooling damper
DT band:	used to set the band for opening the freecooling damper.
FC with compressor:	allows simultaneous operation of freecooling and the compressor. YES / NO
Delay:	used to set a delay for opening the freecooling damper.
Outlet limit:	enables a limit to ensure too much cool air is not introduced into the site. YES / NO
Minimum temp.:	used to set the minimum inlet temperature via the freecooling damper.
Band:	used to set the band for the minimum temp.

E9

```
Emegergency Mode      Yes
Set Point          31.0°C
Band               01.0°C
Delta T            01.0°C
Band DT            00.5°C
FC With Compressor    Yes
Compressor Alarm      Yes
```

Page 3

Emergency mode:	enables the freecooling damper in the event of emergencies. YES / NO
Set point:	used to set the temperature for activating emergency mode.
Band:	used to set the set point band.
Delta T:	used to set the temperature delta in emergency mode.
DT band:	used to set the temperature delta band in emergency mode.
FC with compressor:	allows simultaneous operation of freecooling and the compressor in emergency mode. YES / NO
Compressor alarm:	allows freecooling operation if the compressor alarm is activated. YES / NO

Compressor

E10

```
Set Point          24.0°C
Band               03.0°C
```

This screen is displayed in systems with:
1 unit controlled by one PLC

Set point:	used to set the set point for activating the compressor.
Band:	used to set the band for activating the compressor.

E11

```
Set Point CDZ 1    24.0°C
Band   CDZ 1       03.0°C
Set Point CDZ 2    26.0°C
Band   CDZ 2       03.0°C
```

This screen is displayed in systems with:
2 units controlled by the same PLC

Set point AC 1:	used to set the set point for activating the compressor relating to the 1st air-conditioner.
Band:	used to set the band of start-up of the compressor.
Set point AC 2:	used to set the set point for activating the compressor relating to the 2nd air-conditioner.
Band:	used to set the band for activating the compressor.

Heater

E12

```
Set Point          07.0°C
Band               02.0°C
```

This screen is displayed in systems with:
1 unit controlled by one PLC

Set point AC 1:	used to set the set point for activating the heater.
Band:	used to set the band for activating the heater.

E13

```
Set Point CDZ 1    07.0°C
Band   CDZ 1       02.0°C
Set Point CDZ 2    05.0°C
Band   CDZ 2       02.0°C
```

This screen is displayed in systems with:
2 units controlled by the same PLC

Set point AC 1:	used to set the set point for activating the heater relating to the 1st air-conditioner.
Band:	used to set the band for activating the heater.
Set point AC 2:	used to set the set point for activating the heater relating to the 2nd air-conditioner.
Band:	used to set the band for activating the heater.

Dehumidification

E14

```
Abilition             Yes
Set Point         70.0%Ur
Band              05.0%Ur
Temp. Limit       10.0°C
Temp. Band        02.0°C
Abilit. Limit FC      Yes
FC Limit          70.0%Ur
FC Limit Band     05.0%Ur
```

Enable:	enables the dehumidification function. YES / NO
Set point:	used to set the set point for operation of the dehumidifier.
Band:	used to set the band for operation of the dehumidifier.
Temp. limit:	used to set the minimum temperature limit, for operation of the dehumidifier.
Temp. band:	used to set the band for the operating temperature limit.
Enable FC limit:	enables the humidity limit for activating the freecooling damper. YES / NO
FC limit:	used to set the humidity limit for activating freecooling.
FC limit band:	used to set the humidity limit band for activating freecooling.

Alarms

E15

```
High  Temp.        30.0°C
Band               05.0°C
Max.  Temp.        35.0°C
Band               05.0°C
Low  Temp.         05.0°C
Band               02.0°C
```

Used to set the alarm set points.
The set points are pre-set in the factory.

E16

```
High  Humid.       75.0%Ur
Band               05.0%Ur
Low  Humid.        25.0%Ur
Band               05.0%Ur
```

E17

```
Alarm  1  Command

01:No    02:No    03:No
04:No    05:No    06:No
07:No    08:No    09:No
10:No    11:No    12:No
13:No    14:No    15:No
```

This screen is displayed in systems with:
1 unit controlled by one PLC

Page 1
Used to configure the alarm signals (from 1 to 7, depending on the controller and configuration).
The user can select which alarms activate the alarm signal output.

E18

```
Alarm  1  Command

16:No    17:No    18:No
19:No    20:No    21:No
22:No    23:No    24:No
25:No    26:No    27:No
28:No    29:No    30:No
```

Page 2

E19

```
Alarm  1  Command

31:No    32:No    33:No
34:No    35:No    36:No
37:No    38:No    39:No
40:No    41:No    42:No

Status  NC/NO
```

Page 3

E20

```
Alarms  Actions  N°2  CDZ
01:0     02:0     03:0
04:0     05:0     06:0
07:0     08:0     09:0
10:0     11:0     12:0
14:0     15:0     16:0
17:0     18:0     19:0
20:0     20:0     21:0
```

This screen is displayed in systems with:
2 units controlled by one PLC.
Page 1
Each alarm can be configured to perform an action on the system.

0 No action
1 Add unit to network.
2 Switch unit off and switch on another in the network.
3 Switch off all the units in the network

E21

```
Alarms  Actions  N°2  CDZ
22:0     23:0     24:0
25:0     26:0     27:0
28:0     29:0     30:0
31:0     32:0     33:0
34:0     35:0     36:0
37:0     38:0     39:0
40:0     41:0     42:0
```

Page 2

Note: When an alarm is activated, the main screen shows the alarm symbol (page 14-15) in area 3; pressing the ALARM button opens the alarm display screens and the audible alarm sounds; if more than one alarm is active, these can be scrolled using the UP and DOWN buttons. Pressing the ALARM button on one of the alarm display screens resets all the alarms; if the alarms are still active, the audible alarm sounds again.

pLAN network

E22

pLAN Abilitation	Yes
N° Units pLAN	02
Medium Temperature	No
N° Units in STBY	1
Rotation Time Hours	24
Rotation Test	No

The network can have a maximum of 10 units and 11 terminals, one of which shared. Unit operation in the LAN network is configured on unit 01.

Page 1

Enable LAN: enables the LAN function. YES / NO
No. of units in LAN: used to set how many units are connected to the LAN.
Average temperature: this function allows temperature control on the individual units using the average temperature measured by the active units connected to the pLAN. YES / NO
No. of units in STBY: sets how many units are in Standby.
Rotation hours: this function is used to balance the operating hours of the units connected in a pLAN network. Rotation is performed based on the set time, expressed in hours, activating the unit with the lowest address first. A maximum of 2 units can be set in standby if there are more than 4 units connected in the pLAN network.
Rotation test: runs the test to verify the exact operation of the rotation function.

E23

pLAN Support	Yes
Cooling Set	21.0°C
Cooling Band	03.0°C
Cooling Set D	05.0°C
Heating Set	05.0°C
Heating Band	02.0°C
Heating Set D	02.0°C

Pag. 2

Used to set the pLAN Support set points.

E24

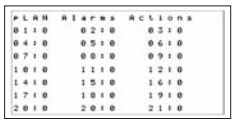

pLAN Alarms Actions		
01:0	02:0	03:0
04:0	05:0	06:0
07:0	08:0	09:0
10:0	11:0	12:0
14:0	15:0	16:0
17:0	18:0	19:0
20:0	20:0	21:0

E25

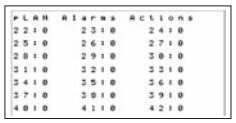

pLAN Alarms Actions		
22:0	23:0	24:0
25:0	26:0	27:0
28:0	29:0	30:0
31:0	32:0	33:0
34:0	35:0	36:0
37:0	38:0	39:0
40:0	41:0	42:0

Page 3

Each alarm can be configured to perform an action on the LAN.

0. No action
1. Add unit to network.
2. Switch unit off and switch on another in the network.
3. Switch off all the units in the network.

Page 4

See the paragraph on "LAN - local network"

Configuration

E26

ON/OFF Keyboard	No
Time Band	Yes
Start	22:00
End	07:00
Supervisin	Yes
Address	001
Baud Rate	19200bps
Protocol	Modbus

Page 1

ON/ OFF keypad: enabling this function means the unit can be switched on and off by pressing the ENTER button for 5 seconds on the main screen. YES / NO
Time bands: enabling this function means the unit can be switched on and off based on time bands.
Start: used to set the time the unit starts operating.
End: used to set the time the unit stops operating.
Supervision: enabling this function allows the unit to be managed by a supervisor, fitting an optional board.
Address: used to set the address for the supervisor.
Speed: selects the communication baud rate.
Protocol: selects the communication protocol. Modbus/Carel/Lon

E27

Night Function	Yes
Start	21:00
End	08:00
Compressor Set	26.0°C
MF Reduction	050%
MF Cooling Set	24.0°C
MF Heating Set	03.0°C
VC Reduction	050%

Page 2

Night function: by enabling this function, in specific time bands a different set point can be set for the fan and the compressor, plus a reduced outlet fan speed. YES / NO
Start: used to set the Night function start time.
End: used to set the Night function end time.
Compressor set: used to set the compressor set point for the night function.
Out fan reduction: used to reduce the outlet fan speed for the night function.
Cooling set point: sed to set the cooling set point for the night function.
Heating set point: used to set the heating set point for the night function.
Cond. fan reduction: used to reduce the condenser fan speed for the night function.

Password

E28

Screen for setting the level 1 password

LEVEL 2

- **Status**
- **Alarm log**
- **Graphs**
- **Clock**
- **User**

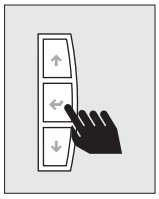

To change the value press ↵.

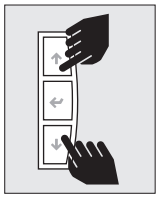

To change the value press ↑ and ↓.

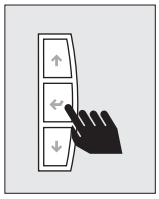

Confirm by pressing ↵.

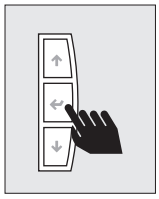

To move to the next row press ↵.

F MAINTENANCE

```
Maintenan
Analogue I
Operating hours
Alarms
Manual
Password
```

MAINTENANCE	
Analogue I	Screens for calibrating the analogue inputs.
Operating hours	Screen to reset the device operating hours.
Alarms	Screens for setting the alarm and log reset modes.
Manual	Screens for activating manual mode and probe simulation.
Password	Screen for setting the level 2 password.

The loops of screens are displayed if the corresponding devices are enabled.

Analogue I

F1

```
1:Pressure
Cal.  0.0  Val.  012.0bar
2:Humidity
Cal.  0.0  Val.  054.2%Ur
3:Room  Temperature
Cal.  0.0  Val.  027.2°C
4:Delivery  Temperature
Cal.  0.0  Val.  018.0°C
```

Page 1
Analogue input calibration

F2

```
5:Ambient  Temperature
Cal.  0.0  Val.  017.5°C
```

Page 2

Operating hours

F3

```
MF  Hours  Reset        No
Compr.  Hours  Reset    No
Start-Up  C.  Reset     No
CF  Hours  Reset        No
Heater  Hours  Reset    No
FC  Hours  Reset        No
```

This screen is displayed in systems with 1 unit controlled by one PLC

Used the reset the various operating hours YES / NO.

F4

```
MF  1  Hours  Reset     No
MF  2  Hours  Reset     No
Comp.1  Hours  Reset    No
Comp.2  Hours  Reset    No
Start-Up  C.1  Reset    No
Start-Up  C.2  Reset    No
```

This screen is displayed in systems with:
2 units controlled by the same PLC

Page 1
Used the reset the various operating hours YES / NO.

F5

```
Heat.1 Hours Reset No
Heat.2 Hours Reset No
FC Hours Reset     No
```

Page 2

Alarms

F6

```
Reset Mode

01:Man.02:Man.03:Man.
04:Man.05:Man.06:Man.
07:Man.08:Man.09:Man.
10:Man.11:Man.12:Man.
13:Man.14:Man.15:Man.
```

Each alarm can be set as manual or automatic reset; the MAINTENANCE LOOP, ALARM screens feature the corresponding parameters.
For alarms with automatic reset, the display on the main screen disappears when the alarm is not longer active, however the alarm display screens and buzzer remain active until the alarm is reset by pressing the ALARM button.

F7

```
Reset Mode

16:Man.17:Man.18:Man.
19:Man.20:Man.21:Man.
22:Man.23:Man.24:Man.
25:Man.26:Man.27:Man.
28:Man.29:Man.30:Man.
```

F8

```
Reset Mode

31:Man.32:Man.33:Man.
34:Man.35:Man.36:Man.
37:Man.38:Man.39:Man.
40:Man.41:Man.42:Man.

History Reset      No
```

Manual

F9

```
Manual                Yes
Main Fan            000%
Compressor           No
Condensing Fan      000%
Free Cooling        000%
Deumidify             No
Heater                No
```

This screen is displayed in systems with:
1 unit controlled by one PLC

In manual mode, the devices can be activated independently of the control functions, while the safety features are still active.
Manual mode can last a maximum of 30 minutes.

F10

```
Manual                Yes
Main Fan     1         No
Main Fan     2         No
Compressor   1         No
Compressor   2         No
Heater       1         No
Heater       2         No
Free Cooling        000%
```

This screen is displayed in systems with:
2 units controlled by the same PLC

Page 1

In manual mode, the devices can be activated independently of the control functions, while the safety features are still active.
Manual mode can last a maximum of 30 minutes.

F11

```
Simulation Probes   No
1:Pressure      000.0bar
2:Umidity       000.0%Ur
3:T.Room        000.0°C
4:T.Delivery    000.0°C
5:T.Ambient     000.0°C
```

Page 2

Password

F12

```
Password
Level  2

0000
```

Screen for setting the level 2 password

"LAN" - LOCAL NETWORK (E22- E23 - E24 DISPLAY SCREENS)

MAIN FUNCTIONS OF THE LAN

The connection of the units (that is, the PCO boards fitted on each unit) in the pLAN network allows the following functions to be performed:

- balance the operating hours between the air-conditioners by rotation of the standby unit.
- start the standby unit if the other unit shuts down due to a serious alarm or blackout
- start the standby unit to provide for excessive thermal load.
- control up to 10 air-conditioners from just one user terminal (shared user terminal)
- operation of all the air-conditioners based on the average of the temperature and humidity values read by the probes on the air-conditioners that are operating at that moment

1. The local network connection is used to manage the operation of a series of air-conditioners operating inside the same environment,

2. The number of units that can be connected is 10 MAX.

3. The maximum extension of the network connections is **500 metres.**

4. All the units connected in the network must have the **same version of the program** installed in the flash memory on the board.

5. A terminal can be configured as "private" or "shared":
- **a private terminal** can display the operating status only of the unit it is connected to via telephone cable
- **a shared terminal** can display the operating status of all the units connected in the network.

6. Each board can "talk" to a maximum of 3 terminals; in common applications, generally no more than two are used: one fitted on the unit and another optional remote terminal.

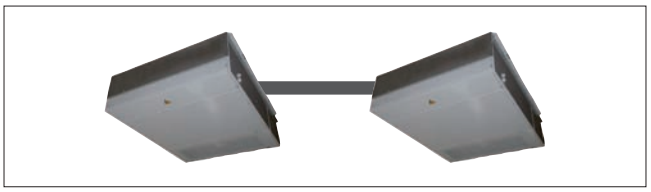

The priority on the terminal is always the display of the alarms, even if when the alarm is activated the terminal is displaying the parameters from another unit.

7. To be able to communicate over a local network, the units must be configured so as to be able to send the other units the required information for correct operation.
In this regard, the first step involves assigning a progressive number to the different units (1, 2, 3,…10) and then correctly setting the addresses of the various terminals and LAN boards, and making the electrical connections, step-by-step, as described in the following paragraphs.

1) INTERCONNECTION BETWEEN THE UNITS BY SHIELDED CABLE

In order to realize a LAN (Local Area Network) between the units, it is required that installers provide to link together all units with a dedicated cable. The cable is not supplied by CLIMAVENETA. AWG 24 cables with two twisted pairs plus shield, such as the Belden 8723 or 8102, and AWG 24 cables with three twisted pairs plus shield, Belden 8103 or similar, are recommended.
The electrical connections must be completed when the units are off and disconnected from the power supply following the below reported schema.
Connections must be provided directly on the main terminal block of the units (on the El.Panel) and not on the main board directly.
Connectors RX/TX+, RX/TX-, & GND are in different positions/Clamps based on the unit type and size: consequenly please always refer to the electrical diagram inside the units where such connectors are clearly indicated.
Remember that connection between 3 connectors RX/TX+, RX/TX-, & GND has to be similar among the units: the shield has to be connected to the earth connector only in 1 unit.
Refer to the below unit for the unit interconnection. (for the right clamps refer to the el. Diagram on the unit)

LAN CONNECTION BETWEEN 2 OR MORE UNITS

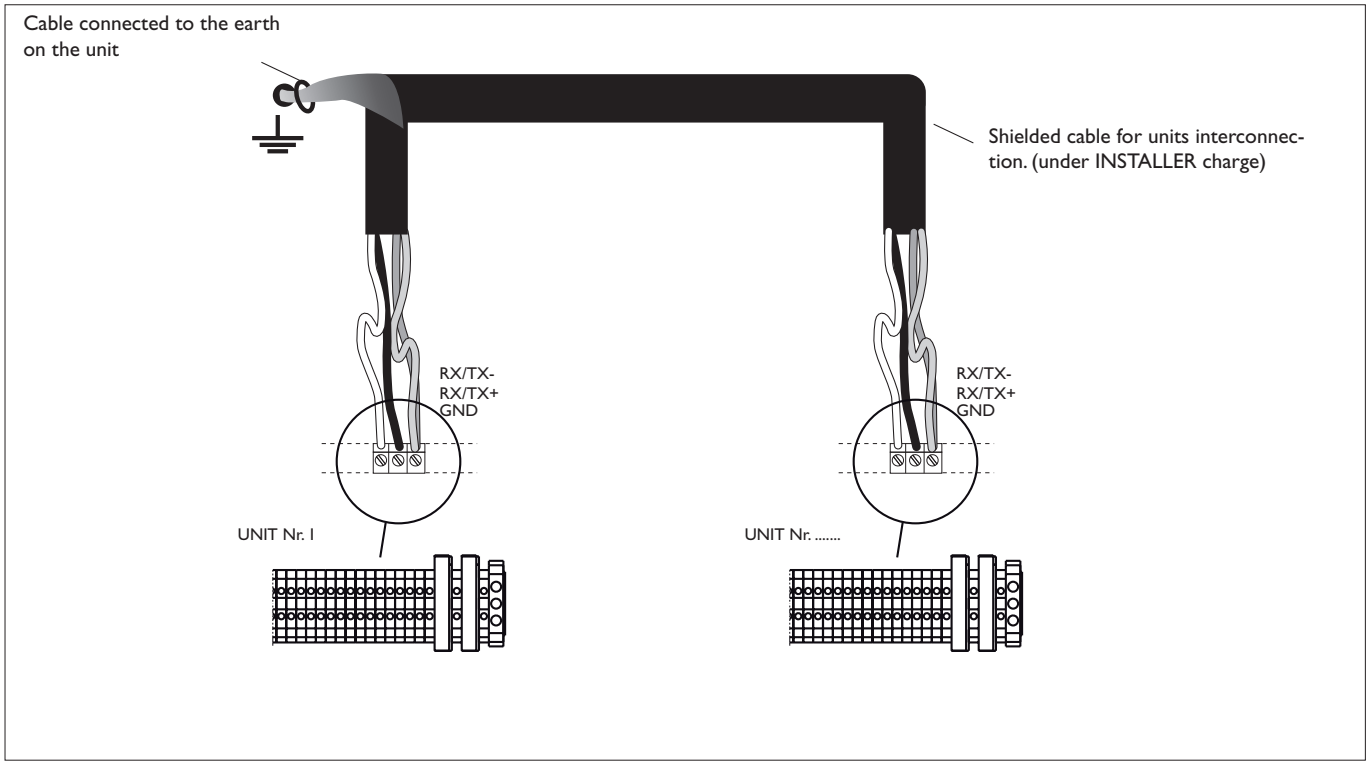

2) SETTING THE ADDRESSES OF THE UNITS (FROM 1 TO 10) AND THE USER TERMINALS (FROM 11 TO 20)

CONFIGURING THE NETWORK

When it has been realized the electrical interconnection as reported on phase 1) it is required to switch to phase 2) for the address configuration for:

A) units, addresses from 1 to 11
B) user terminal/Display, addresses from 11 to 20

Remember that standard confirguration from factory is the following:
Address 1 for the unit
Address 11 for the user terminal/Display

Remember that the MAX amount of units per LAN line are 10 (with max 2 in stad-by).
Right confirguration and addresses for units and user terminals/Display are reported on the following resuming table.

TABLE OF TERMINAL ADDRESSES AND LAN BOARD ADDRESSES

LAN Board Address	Terminal address / Display
1	11
2	12
3	13
4	14
5	15
6	16
7	17
8	18
9	19
10	20

LAN Board Address	Terminal address / Display
-	32 (**remote / shared**)

A) UNITS ADDRESSES (FROM 1 TO 11)

Right units configuration is foundamental for the network in order to recognize all units connected.
Same addreessing for 2 or more units in the same LAN network is not allowed: in such casethe following alarm screen will appear .

NO LINK

Units addressing can be done only from user terminal/display.

Units addressing can be done only if the user terminal/display is previusly setted with "0" (zero) address.

A1) PROCEDURE TO ADDRESS THE USER TERMIAL/DISPLAY AT "0" ZERO

It is possible to set the user terminal/display address only after giving it a power supply through the telephone cable on its rear side **(connected to the main board)**.

To enter configuration mode press simultaneusly following buttons UP, ENTER, DOWN for 5 sec.; the following screen will appear with cursor blinking on the top -left side.

Display address
setting.....: 11
I/O Board address: 01

- To set the terminal address (display address setting), press the ENTER button once: the cursor will move to the address field (n°11).
- Use the UP and DOWN buttons to select the "0" (zero) value and confirm by pressing ENTER again.
  If the value selected is different from the one saved previously, the following screen will be displayed and the new value will be saved to the permanent memory on the display.

Display address
changed

A2) PROCEDURE TO ADDRESS THE UNITS (ADDRESSES FROM 1 TO 10)

Once the terminal address is set to "0" (zero), disconnect power supply from the board and then power it up again while at the same time holding the ALARM and UP buttons on the user terminal: wait until the following screen is displayed.

pLan address: 1
UP: increase
DOWN: decrease
ENTER: save & exit

Release the buttons and set the correct address as per the table shown above, from 1 to 10. Same addreessing for 2 or more units or user terminals/display in the same LAN network is not allowed.
Set the right value. Remember to set units addresses progressively from 1 to 10 within the sme LAN line.

B) USER TERMINAL/DISPLAY ADDRESSING FROM 11 TO 20

At this point unit n°1 has to be connected with user terminal/display 11, unit n°2 has to be connected with user terminal/display 12 etc.....unit n°10 has to be connected with user terminal/display 20 (look the following table)

To enter configuration mode press simultaneusly following buttons UP, ENTER, DOWN for 5 sec.; the following screen will appear with cursor blinking on the top -left side.

Display address
setting.....: 00
I/O Board address: 01

- To modify the terminal address (display address setting), press the ENTER button once: the cursor will move to the address field (n°00).
- Use the UP and DOWN buttons to select the right value reported on the table
  If the value selected is different from the one saved previously, the following screen will be displayed and the new value will be saved to the permanent memory on the display.

Display address
changed

TABLE OF TERMINAL ADDRESSES AND LAN BOARD ADDRESSES

LAN Board Address	Terminal address / Display
1	11
2	12
3	13
4	14
5	15
6	16
7	17
8	18
9	19
10	20

LAN Board Address	Terminal address / Display
-	32 (**remote / shared**)

3) CONFIGURING THE SOFTWARE FOR UNIT RECOGNITION AND MANAGEMENT

All the settings corresponding to the LAN can be made starting from the settings menu and accessing (second row) the branch of LAN/serial configuration screens. All the parameters can be set on the MASTER unit only (that is, the unit with address 1), which automatically sends any changes to all the other units in the network.

E22

```
pLAN Abilitation      Yes
N° Units pLAN          02
Medium Temperature     No
N° Units in STBY        1
Rotation Time Hours    24
Rotation Test          No
```

The network can have a maximum of 10 units and 11 terminals, one of which shared. Unit operation in the LAN network is configured on unit 01.

Page 1

Enable LAN: enables the LAN function. YES / NO

No. of units in LAN: used to set how many units are connected to the LAN.

Average temperature: this function allows temperature control on the individual units using the average temperature measured by the active units connected to the pLAN. YES / NO

No. of units in STBY: sets how many units are in Standby.

Rotation hours: this function is used to balance the operating hours of the units connected in a pLAN network. Rotation is performed based on the set time, expressed in hours, activating the unit with the lowest address first. A maximum of 2 units can be set in standby if there are more than 4 units connected in the pLAN network.

Rotation test: runs the test to verify the exact operation of the rotation function.

E23

```
pLAN Support            Yes
Cooling Set        21.0°C
Cooling Band       03.0°C
Cooling Set D      05.0°C
Heating Set        05.0°C
Heating Band       02.0°C
Heating Set D      02.0°C
```

Pag. 2

Used to set the pLAN Support set points.

E24

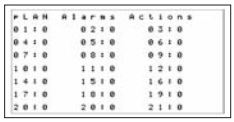

```
pLAN Alarms Actions
01:0   02:0   03:0
04:0   05:0   06:0
07:0   08:0   09:0
10:0   11:0   12:0
14:0   15:0   16:0
17:0   18:0   19:0
20:0   20:0   21:0
```

E25

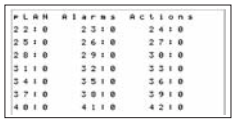

```
pLAN Alarms Actions
22:0   23:0   24:0
25:0   26:0   27:0
28:0   29:0   30:0
31:0   32:0   33:0
34:0   35:0   36:0
37:0   38:0   39:0
40:0   41:0   42:0
```

Page 3

Each alarm can be configured to perform an action on the LAN.

0. No action
1. Add unit to network.
2. Switch unit off and switch on another in the network.
3. Switch off all the units in the network.

Page 4

See the paragraph on "LAN - local network"

NB: For each pCO controller can be connected to two user terminals one private and one shared, the user terminal can be directly connected to the card pCO on the connector RJ12 phone or through a derivative. In the network there can be at most one shared terminal with address 32. The shared terminal is able to connect to all the controllers present in pCO network plans, to move from one address to another, simply press the keys simultaneously ESC + ALARM. In any mask of view, you can see which is the address of a controller connected by simultaneously pressing the keys UP + DOWN for 5 seconds.

MANAGEMENT OF AVERAGE TEMPERATURE AND HUMIDITY

When the units are connected in a LAN this network connection can be exploited to have them operate based on the average temperature and humidity of all the readings made on the active units (that is, fan operating) without alarms.

Calculation of the average

The average is calculated by the MASTER unit (that is, the unit with pLAN address 1) only if control based on the average values has been enabled on the user terminal.

The MASTER unit, to perform this calculation, receives the ambient temperature and humidity values read by the probes on all the units connected in a LAN, calculates the average and then sends the resulting value to all the units.

The average temperature and humidity is only calculated on the readings from the units that:

- are not in standby (if the rotation of the standby unit is enabled);
- do not have a serious alarm (see the following paragraphs);
- have not been switched off from the user terminal.

Enabling the use of the average reading

The use of the average temperature and humidity value for control is only enabled if:

- the function is enabled;
- there are no problems in the LAN connection between the units.

When problems are detected in the LAN, the unit immediately disables control based on the average values and works with the local values (that is, the values read by the probes on the unit itself).

MANAGEMENT OF THE STANDBY UNIT

In an installation made up of units that are operating and units in standby, the operating hours of the units will not be equal, as the former will be operating for longer than the latter, which are off. To overcome this problem the pLAN network can rotate the operation of the units, thus balancing the operating hours. In practice, rotation places a unit that is on in standby and starts the unit that is in standby.

Management of the rotation function

The rotation of the standby unit is managed entirely by the unit with address 1 (in this case, the MASTER, while all the others are SLAVES) and is performed based on times, starting from the unit with the lowest address, that is, the unit with address 1, and then progressively incrementing the address... Two standby units can be set, however only if there are at least four units connected in the LAN; in this case, the rotation of the units in standby starts with the first two (addresses 1 and 2), then the second two (2 and 3) and so on…

If the rotation time is set to zero, from that time on rotation will no longer be performed, consequently the same unit remains in standby, and is only activated in the event of faults and alarms, as described in the following paragraphs. As regards the differentials, these coincide with the values set for normal control.

Alarm management

The network may be disconnected due to one of the following situations:

- fault with the PCO LAN board (integrated inside the PCO board: in this case, the entire board needs to be replaced);
- detachment of the connection cable from the PCO LAN board;
- power down of the unit or the PCO board;
- breakage of the cable at a point between two units

There are two possible situations:

- one or more units are no longer visible;
- lthe network is broken into one (or more) branches

Each unit constantly receives information on the status (that is, the visibility) of all the other units that should theoretically be connected to the network (based on the number of units in the LAN set on the user terminal). Each unit can therefore detect any disconnections. When a unit detects a disconnection in the LAN, the following occur:

- signal on the main screen;
- the unit is started if in standby;
- control based on average values disabled, if enabled;
- time count for the rotation of the standby unit suspended.

CONNECTION TO THE REMOTE TERMINAL FROM THE BOARD

This configuration requires:

1. the use of two 'T' shunts: one fitted on the unit and one near the remote terminal;
2. the use of the 3x2 shielded cable, so that the power to the remote terminal is also supplied by the board on unit 1, connected using the 'T' shunt;
3. near the terminal, insert the ferrite to reduce any electromagnetic disturbance.

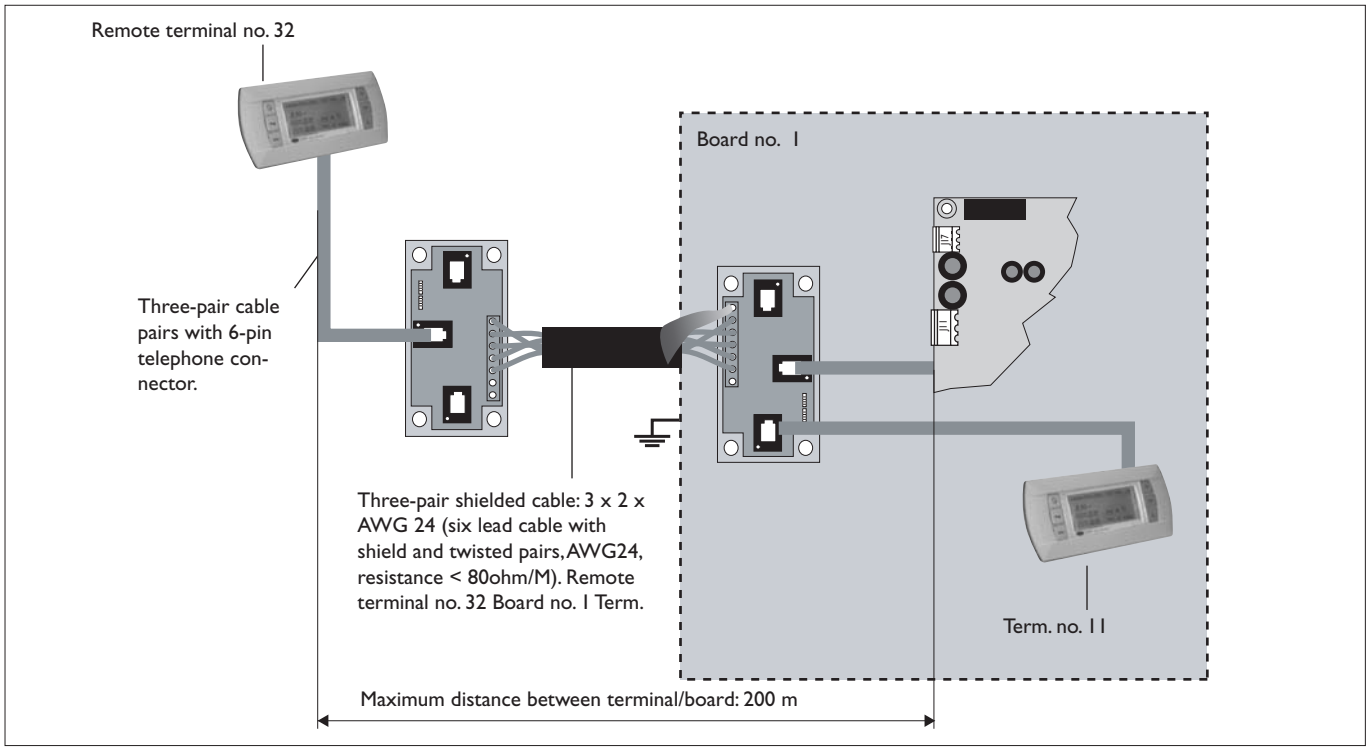

Connections for the 2 x 2 x AWG 24 CABLE
(for connecting the remote terminal: without transferring the power supply)

terminal	function	cable connections
0	Earth	shield
1	+ VRL ≈ 30Vcc	
2	Gnd	First pair
3	Rx/Tx -	Second pair
4	Rx/Tx +	Second pair
5	Gnd	First pair
6	+ VRL ≈ 30Vcc	

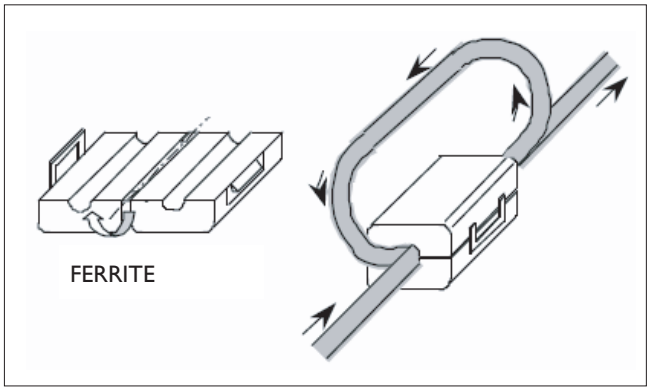

ELECTRICAL CONNECTIONS

The electrical connections must be completed when the units are off and disconnected from the power supply. The network can have different configurations, according to the maximum distance of the connections between the boards and the remote terminal; for the connections between the remote terminal and the main board, a 'T' shunt may be required, as shown in the drawing.

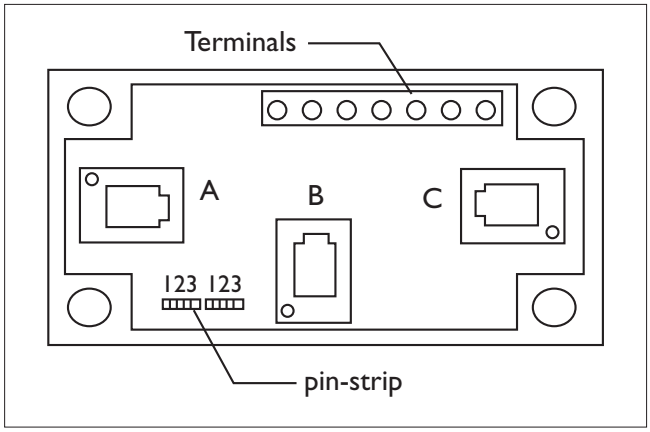

terminal	function
0	Earth (shield)
1	+VRL ≈ 30Vcc
2	Gnd
3	Rx/Tx-
4	Rx/Tx+
5	Gnd
6	+VRL ≈ 30Vcc

If both the jumpers are installed between 2 and 3 the flow of current is interrupted between the connectors separated by the dashed line.

If power is required on all the connectors, both the jumpers must be installed between 1 and 2.

Terminal 0 is an auxiliary terminal and can be used to earth the shield of the cable; the 'T' shunt must in any case be connected to a metallic part of the unit that is already earthed.

MAXIMUM DISTANCE BETWEEN THE TERMINAL AND THE BOARD

1 For local terminals the connection to the main board is already made using a 3-pair cable and 6-pin telephone connector. The length of this cable generally does not exceed 3 metres.

2 The remote terminals can be connected to the main board using the type of telephone cable described in point 1, with a maximum distance of 50 metres.

3 For greater distances, up to a maximum of 200 metres, a shielded cable must be used (six lead cable with shield and twisted pairs, AWG24, resistance < 80 ohm/M). The cable may have 3 or 2 pairs, depending on whether the power needs to be supplied to the terminals. The cable is not supplied by CLIMAVENETA.

AWG 24 cables with two twisted pairs plus shield, such as the Belden 8723 or 8102, and AWG 24 cables with three twisted pairs plus shield, Belden 8103 or similar, are recommended.

DISPLAYING THE NETWORK FROM THE TERMINAL

From any terminal in the network, holding the UP + ENTER + DOWN buttons for at least 10 seconds, will display the << NetSTAT >> screen (see Fig. 2).

The NetSTAT screen shows all the LAN boards and all the terminals connected in the network, including the shared remote terminal, with the corresponding addresses.

In the example, the network is made up of 3 LAN boards with addresses 1, 2, 3, and 4 user terminals with addresses 11, 12, 13 and 32.

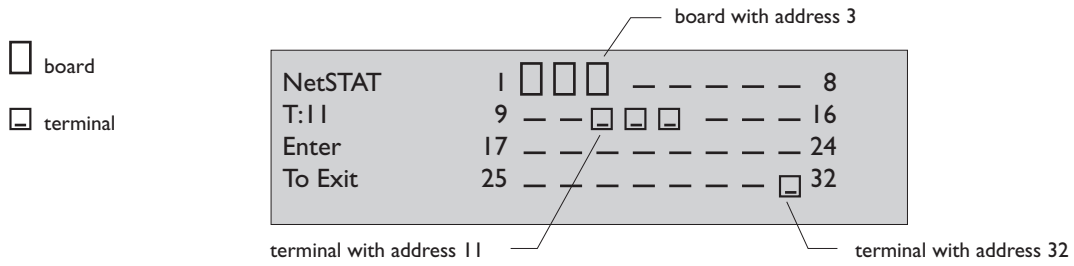

fig. 2

NB: this part is not intended to go into detail on the various versions and options available in the CLIMAVENETA range as regards supervisory systems, a topic that will be dealt with in a special manual. Rather, the purpose is to provide a rapid indication of the operations to be performed on the unit software by setting parameters from the user terminal so as to activate the database on the controller.

Therefore below is a short list of the operations to be carried out for the management of a serial interface board, in particular:

1) Options and serial boards currently available
2) Installation
3) Configuration of the software from the terminal
4) Configuration / Physical development of the serial network

1) Options and serial boards currently available

Currently CLIMAVENETA offers the market a series of serial interfaces that allow the ACCURATE precision air-conditioners to share their control variables with local or remote BMS (Building Management Systems), both proprietary systems and those more commonly found on the market today.

The interfacing and sharing of the control variables with such systems can be performed using serial boards/interfaces that are compatible with the BMS that the variables should be exchanged with.

Consequently, the various OPTIONS that can be ordered when purchasing the unit (and can also be supplied subsequently) include the following serial interface boards:

- **CLOCK** board used for identifying alarm events by time. The clock board MUST NOT be installed in the same SLOT as the serial boards listed below
- **RS485** for dialogue with protocols: CAREL and MODBUS
- **RS232** for dialogue with protocol RS232
- **BACNET** for dialogue with protocol: BACNET
- **ETHERNET** for dialogue with protocols: SNMP and TCP/IP-
- **LON** for dialogue with protocol: LON

CLOCK BOARD

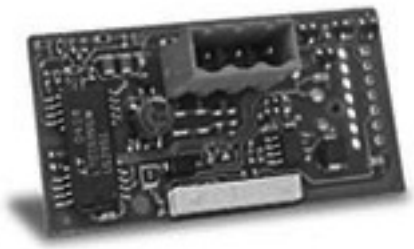

RS485 - MODBUS SERIAL CARD

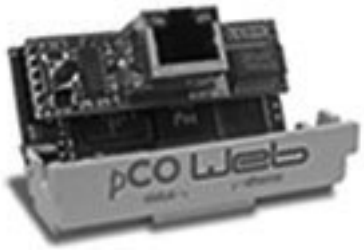

ETHERNET / BACNET SERIAL CARD

RS232 SERIAL CARD

LON SERIAL CARD

ALARMS (TROUBLESHOOTING)

Alarm	Description	Solution	Devices switched off
	Configuration alarm	No user action possible. Contact Service	Signal only
	Fire/smoke/flood alarm	Check status on site.	Stops operation of the unit
	Fire/smoke alarm.	Check status on site. Reset if possible.	Stops operation of the unit
	Flood alarm	Check status on site. Reset if possible.	Stops operation of the unit
	Outlet fan flow alarm.	Check operation on site.	Stops operation of the unit
	Outlet fan thermal overload alarm.	Check operation on site.	Stops operation of the unit
	Blackout/incorrect phase sequence alarm.	Check operation on site.	Stops operation of the compressor, condenser fan and heater.
	High pressure alarm from digital input / analogue input.	Check operation on site.	Stops operation of the compressor
	Low pressure alarm.	Check operation on site.	Stops operation of the compressor
1 2	Compressor alarm on air-conditioner 1 and 2	Check operation on site.	Stops operation of the unit
2	Compressor alarm on air-conditioner 2	Check operation on site.	Stops operation of the unit
1	Compressor alarm on air-conditioner 1	Check operation on site.	Stops operation of the unit
	Condenser fan thermal overload alarm	Check operation on site.	Stops operation of the unit
	Heater alarm	Check operation of the safety thermostat on site. Contact Service if necessary	Stops operation of the unit
	Blocked filter alarm	Clean the filters. Change of filters	Signal only
	Damper alarm.	Check correct closing of the damper or incorrect activation of the heater.	Signal only
	EPROM alarm	Check operation of the buffer memory on site.	Signal only
	Room temperature probe alarm.	Check probe connections.	Stops operation of the unit
	Outside temperature probe alarm.	Check probe connections.	Freecooling
	Outlet temperature probe alarm	Check probe connections.	Compressor
	Room humidity probe alarm.	Check probe connections.	Signal only
bar	Condensing pressure probe alarm	Check probe connections.	Signal only
	LAN disconnected alarm.	Check LAN network or unit power supply connection.	Signal only
	Maximum room temperature alarm	Check the temperature and unit status on site.	Signal only
	High room temperature alarm.	Check the temperature and unit status on site.	Signal only
	Low room temperature alarm.	Check the temperature and unit status on site.	Signal only
	High room humidity alarm.	Check the temperature and unit status on site.	Signal only
	Low room humidity alarm	Check the temperature and unit status on site.	Signal only
	Room thermostat alarm.	Contact open, check on site.	Signal only
AUX	Auxiliary alarm.	Contact open, check on site.	Signal only

Alarm	Description	Solution	Devices switched off
	Clock alarm	Clock board not working. Check on site.	Signal only
	Compressor maintenance.	Compressor operating hours exceeded.	Signal only
	Outlet fan maintenance.	Check operation on site.	Stops the fan
	Condenser fan maintenance.	Check operation on site.	Stops the fan
	Compressor maintenance, air-conditioner 1 and 2.	Check operation on site.	Stops the compressor + outdoor fan
	Compressor maintenance, air-conditioner 2.	Check operation on site.	Stops the compressor + outdoor fan
	Compressor maintenance, air-conditioner 1.	Check operation on site.	Stops the compressor + outdoor fan
	Maintenance on air-conditioner 1 and 2 outlet fan	Check operation on site.	Stops the fan
	Maintenance on air-conditioner 2 outlet fan	Check operation on site.	Stops the fan
	Maintenance on air-conditioner 1 outlet fan	Check operation on site.	Stops the fan

TROUBLESHOOTING

PROBLEM	CAUSE	SOLUTION
The fan doesn't start	No DC power supply	Check the DC power supply
		Check the circuit breaker
	External main switch "off"	Switch "On"
	PLC fault	Contact the service centre
	Fan fault	Contact the service centre
The compressor doesn't start	No AC power supply	Check the AC power supply
		Check the circuit breaker
Insufficient FREECOOLING capacity	Mesh filter blocked	Clean the filter
Insufficient cooling capacity	Inside air flow blocked	Remove the obstacles
	Outside air flow blocked	Remove the obstacles
Noise and vibrations	Contact between metallic bodies	Check
	Loose screws	Tighten the screws

OPERATING CHARACTERISTICS

SWITCHING ON AND OFF

To switch the unit on and off use the disconnect switch QS1.
When switching on, the compressor oil heater is powered and the electronic board goes to standby.
In the event of temporary power failures, when power returns, the mode set previously will be stored in the memory.

COMPRESSOR ACTIVATION

Two functions prevent the compressor from starting:
- Minimum time since last stopping: 180 seconds
- Minimum time since last starting: 300 seconds

EXTENDED SHUTDOWN

After having deactivated the condensing unit:
- Deactivate the indoor unit, moving the unit switch to the "OFF" position.

ROUTINE MAINTENANCE

Regular maintenance is fundamental to ensure efficient operation of the unit and energy consumption.
Technical Service must follow an annual maintenance plan, which includes the following operations and check:
- Charge gas
- Correct operation of the safety devices;
- Power supply
- Power input.
- Electrical and refrigerant connections.
- Condition of the compressor contactor;
- Operating pressure, heating and cooling function
- Correct operation of the compressor heater
- Cleaning of the finned coil
- Cleaning of the fan grills
- Cleaning of the condensate drain

⚠ For units installed near the sea, the maintenance intervals should be halved.

SPECIAL MAINTENANCE

REFRIGERANT GAS CONTENT

The units are charged with gas and tested in the factory, to identify the type of refrigerant see the rating plate on the unit.

In normal conditions, there should be no need for the Technical Service to intervene to check the refrigerant gas.

However, over time, small leaks may develop at the joints leading to loss of refrigerant and emptying of the circuit, causing the unit to function poorly.

In this case, the leaks of refrigerant must be identified and repaired and the refrigerant circuit recharged, in compliance with national legislation in force on substances that are harmful to the ozone layer.

For the HED-HCAT models, use special equipment for the refrigerant collection, so as to protect the environment.

Proceed as follows:

- Empty and dry the entire refrigerant circuit using a vacuum pump connected to the low and high pressure tap until the vacuometer reads about 10 Pa.
  Wait a couple of minutes and check that this value does not rise to more than 50 Pa.
- Connect the refrigerant gas cylinder to the low pressure line.
- Fill with the quantity of refrigerant gas indicated on the unit's rating plate.
- Always check the superheat and subcooling values.
- After a couple of hors of operation, check that the liquid indicator indicates the circuit is dry.

In the event of partial leaks (R410A gas), the circuit must be completely emptied before being recharged

The HED-HCAT units must be charged in the liquid phase.

Operating conditions other than rated conditions may produce considerably different values.

The refrigerant circuit must not be charged with a refrigerant other than that indicated.

The use of a different refrigerant may cause serious damage to the compressor.

Oxygen, acetylene or other inflammable or poisonous gases **must never be used** in the refrigerant circuit as they may cause explosion or intoxication.

Oils other than those indicated must not be used.

The use of a different oil may cause serious damage to the compressor.

DISPOSAL

INFORMATION ON THE CORRECT DISPOSAL OF THE PRODUCT IN COMPLIANCE WITH EUROPEAN DIRECTIVE 2002/96/EC

At the end of its working life, the product must not be disposed as municipal waste.

It must be collected by specific local waste collection authorities and segregated in the waste collection centre or by the reseller who provides this service.

The separate disposal of an electrical appliance avoids possible negative effects on human health and on the environment due to improper disposal and allows the recovery of materials and consequently significant savings in energy and resources.

To highlight the need to dispose of electrical appliances separately, the product has been labelled with the crossed-out wheeled bin symbol.

CONDENSATE DRAIN

The condensate is removed from the pan located underneath the coil through a hose with drain trap, already fitted in the unit; the end of the hose should be connected to the sewerage system in the building via a rubber or plastic hose with an inside diameter of 20 mm.

During installation, pour water into the condensate collection pan so as to fill the drain trap inside the unit with water.

Climaveneta S.p.A.
Via Sarson 57/c
36061 Bassano del Grappa (VI)
Italy
Tel +39 0424 509 500
Fax +39 0424 509 509
info@climaveneta.com
www.climaveneta.com

Climaveneta France
3, Village d'Entreprises
ZA de la Couronne des Prés
Avenue de la Mauldre
78680 Epône
France
Tel +33 (0)1 30 95 19 19
Fax +33 (0)1 30 95 18 18
info@climaveneta.fr
www.climaveneta.fr

Climaveneta Deutschland GmbH
Lyrenstraße 13
44866 Bochum
Germany
Tel +49 2327-95428-0
Fax +49 2327-95428-99
info@climaveneta.de
www.climaveneta.de

Climaveneta España - Top Clima
Londres 67, 1 4
08036 Barcelona
Spain
Tel +34 934 195 600
Fax +34 934 195 602
topclima@topclima.com
www.climaveneta.com

Climaveneta Chat Union
Refrig. Equipment Co Ltd
88 Bai Yun Rd, Pudong Xinghuo
New dev. zone 201419 Shanghai
China
Tel 008 621 575 055 66
Fax 008 621 575 057 97

Climaveneta Polska Sp. z o.o.
Ul. Sienkiewicza 13A,
05-120 Legionowo,
Poland
Tel +48 22 766 34 55-57
Fax +48 22 784 39 09
info@climaveneta.pl
www.climaveneta.pl

Climaveneta Climate Technologies (P) Ltd
#3487, 14th Main, HAL 2nd stage,
Indiranagar, Bangalore 560008
India
Tel:+91-80-42466900 - 949,
Fax: +91-80-25203540
sales@climaveneta.in

Climaveneta UK LTD.
Highlands Road,
Shirley Solihull
West Midlands B90 4NL
Tel: +44 (0)871 663 0664
Fax: +44 (0)871 663 1664
Freephone: 0800 801 819
response@climaveneta.co.uk
www.climaveneta.co.uk

COD. C0I002483F_VI_00