Библиотека СОК

Guide to the EEV system

CAREL

GB

User manual

LEGGI E CONSERVA QUESTE ISTRUZIONI

READ AND SAVE THESE INSTRUCTIONS

Technology & Evolution

User manual

GB

IMPORTANT WARNINGS

CAREL bases the development of its products on decades of experience in HVAC, on the continuous investments in technological innovations to products, procedures and strict quality processes with in-circuit and functional testing on 100% of its products, and on the most innovative production technology available on the market. CAREL and its subsidiaries nonetheless cannot guarantee that all the aspects of the product and the software included with the product respond to the requirements of the final application, despite the product being developed according to start-of-the-art techniques. The customer (manufacturer, developer or installer of the final equipment) accepts all liability and risk relating to the configuration of the product in order to reach the expected results in relation to the specific final installation and/or equipment. CAREL may, based on specific agreements, acts as a consultant for the positive commissioning of the final unit/application, however in no case does it accept liability for the correct operation of the final equipment/system.
The CAREL product is a state-of-the-art product, whose operation is specified in the technical documentation supplied with the product or can be downloaded, even prior to purchase, from the website www.carel.com.
Each CAREL product, in relation to its advanced level of technology, requires setup/configuration/programming/commissioning to be able to operate in the best possible way for the specific application. The failure to complete such operations, which are required/indicated in the user manual, may cause the final product to malfunction; CAREL accepts no liability in such cases.
Only qualified personnel may install or carry out technical service on the product.
The customer must only use the product in the manner described in the documentation relating to the product.
In addition to observing any further warnings described in this manual, the following warnings must be heeded for all CAREL products:

- Prevent the electronic circuits from getting wet. Rain, humidity and all types of liquids or condensate contain corrosive minerals that may damage the electronic circuits. In any case, the product should be used or stored in environments that comply with the temperature and humidity limits specified in the manual.
- Do not install the device in particularly hot environments. Too high temperatures may reduce the life of electronic devices, damage them and deform or melt the plastic parts. In any case, the product should be used or stored in environments that comply with the temperature and humidity limits specified in the manual.
- Do not attempt to open the device in any way other than described in the manual.
- Do not drop, hit or shake the device, as the internal circuits and mechanisms may be irreparably damaged.
- Do not use corrosive chemicals, solvents or aggressive detergents to clean the device.
- Do not use the product for applications other than those specified in the technical manual.

All of the above suggestions likewise apply to the controllers, serial boards, programming keys or any other accessory in the CAREL product portfolio.

CAREL adopts a policy of continual development. Consequently, CAREL reserves the right to make changes and improvements to any product described in this document without prior warning.

The technical specifications shown in the manual may be changed without prior warning.

The liability of CAREL in relation to its products is specified in the CAREL general contract conditions, available on the website www.carel.com and/or by specific agreements with customers; specifically, to the extent where allowed by applicable legislation, in no case will CAREL, its employees or subsidiaries be liable for any lost earnings or sales, losses of data and information, costs of replacement goods or services, damage to things or people, downtime or any direct, indirect, incidental, actual, punitive, exemplary, special or consequential damage of any kind whatsoever, whether contractual, extra-contractual or due to negligence, or any other liabilities deriving from the installation, use or impossibility to use the product, even if CAREL or its subsidiaries are warned of the possibility of such damage.

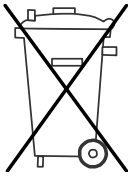

Disposal: the products are made from metal parts and plastic parts.
In reference to European Union directive 2002/96/EC issued on 27 January 2003 and the related national legislation, please note that:

1. WEEE cannot be disposed of as municipal waste and such waste must be collected and disposed of separately;
2. the public or private waste collection systems defined by local legislation must be used. In addition, the equipment can be returned to the distributor at the end of its working life when buying new equipment;
3. the equipment may contain hazardous substances: the improper use or incorrect disposal of such may have negative effects on human health and on the environment;
4. the symbol (crossed-out wheeled bin) shown on the product or on the packaging and on the instruction sheet indicates that the equipment has been introduced onto the market after 13 August 2005 and that it must be disposed of separately;
5. in the event of illegal disposal of electrical and electronic waste, the penalties are specified by local waste disposal legislation.

Contents

1. **Selecting the valve** 7
2. **Installing the valve** 7
   - 2.1 Diagram of the refrigerant circuit 7
   - 2.2 In-line filter 8
   - 2.3 Flow of refrigerant and spatial orientation of the valve 8
   - 2.4 Welding 8
3. **Positioning the probes** 9
   - 3.1 Ideal position of the probes 9
   - 3.2 Positioning with external pressure probe 10
   - 3.3 Positioning for reverse-cycle heat pumps (E^2V in bi-directional operation) 10
4. **Installing the probes** 11
   - 4.1 Suction temperature probe 11
   - 4.2 Evaporation pressure transducer 12
5. **Electrical connections** 13
   - 5.1 Connecting the valve to the driver 13
   - 5.2 Probe and power supply connections 14
   - 5.3 Battery module connection (for closing the valve) 14
6. **Electronic valve control devices** 16
   - 6.1 Drivers 16
   - 6.2 Controllers with built-in driver 17
7. **Control devices: basic parameter settings** 17
8. **Control devices: advanced parameter settings** 18
   - 8.1 Superheat control parameters 18
   - 8.2 Protection function control parameters 19
   - 8.3 Recommended parameters 19
9. **Start-up** 22
   - 9.1 Selecting the superheat set point 22
   - 9.2 Control techniques 22
10. **Troubleshooting** 24

1. Selecting the valve

The electronic expansion valve must be sized based on the cooling capacity of the evaporator it serves.
For the correct selection of the valve, see the "E²V– E⁴V valve selection" manual +030220815, downloadable from www.carel.com. Alternatively, guided selection software is available on ksa.carel.com.
Incorrect sizing may cause various problems.
If the valve is undersized the performance of the system will be affected, as it will not be possible to reach the desired temperature and the superheat will generally be high or greater than the set point.
If on the other hand the valve is oversized, the problems may involve system "swings" (there may be wide variations in temperature, pressure and superheat), and consequently poor efficiency, or alternatively there may be the return of liquid to the compressor.

2. Installing the valve

The electronic valve is installed using threaded or braze-welded fittings, depending on the codes:

- E2V***S0** welded with stainless steel end, outside diameter 10 mm.
- E2V***SF** welded with copper end, outside diameter 12 mm.
- E2V***SM** welded with copper end, outside diameter 16 mm.
- E2V***RB** threaded with 3/8" side end, 1/2" longitudinal end.

To the side is the dimensional drawing of the E²V valves; the table below shows the dimensions of the various models.

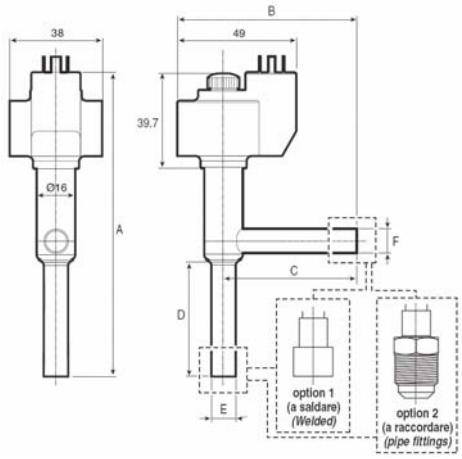

Fig. 2.a

	A (mm/inch)	B (mm/inch)	C (mm/inch)	D (mm/inch)	E (mm/inch)	F (mm/inch)
E2V***S0** Inox/*steel*/ 10-10	127.0 (5.0)	73.7 (2.90)	54.7 (2.15)	48.5 (1.98)	ID 9 / OD 10 (*in* 0.35 / *ext*. 0.39)	ID 9/OD 10 (*in* 0.35 / *ext*. 0.39)
E2V***SF** Rame/*copper* 12-12 mm ODF	121.9 (4.79)	68.7 (2.70)	49.7 (1.95)	43.4 (1.71)	ID 12.1 / OD 14 (*in* 0.47 / *out*. 0.55)	ID 12.1 / OD 14 (*in* 0.47 / *out*. 0.55)
E2V***SM** Rame/*copper* 16-16 mm ODF	123.9 (4.87)	70.7 (2.78)	51.7 (2.03)	45.4 (1.79)	ID 16.1 / OD 18 (*in* 0.63 / *out*. 0.71)	ID 16.1 / OD 18 (*in* 0.63 / *out*. 0.71)
E2V***RB** ottone/*brass* 3/8"-1/2" SAE	139.9 (5.51)	86.7 (3.41)	67.7 (2.42)	61.4 (2.42)	ID 9/¾" thread (*in* 0.35 / 3/4" *thread*)	ID 9/¾" thread (*in* 0.35 / 3/4" *thread*)

Tab. 2.a

2.1 Diagram of the refrigerant circuit

Below is a typical diagram of the refrigerant circuit, with the components that are always featured and the optional components, indicating the typical position of the E²V valve and the sensors required for the calculation of the superheat. The sight glass is not strictly necessary, however is useful when seeking the cause of malfunctions. The solenoid valve is generally used in refrigeration systems (showcases, cold rooms) to stop the flow of refrigerant when the utility is not cooling.

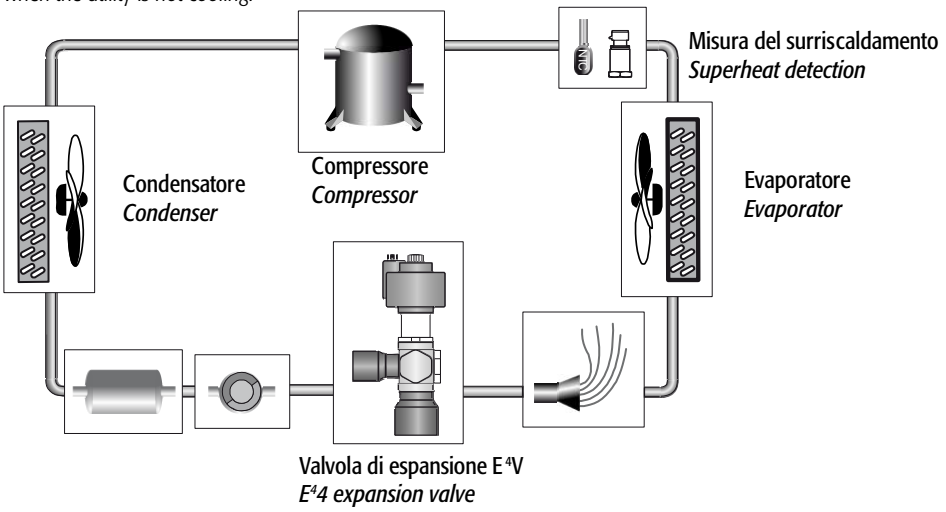

Fig. 2.b

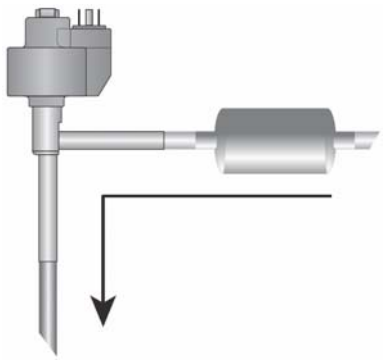

Fig. 2.c

2.2 In-line filter

Always install a mechanical filter before the refrigerant inlet, with both welded valves (E2V***S***) and valves with threaded fittings (E2V***RB**). For the latter, a filter is supplied inside the packaging that can be placed directly in the valve inlet pipe.
If the installation is bi-directional (flow of refrigerant in both directions, reverse-cycle heat pumps), a bi-directional liquid/gas filter should be fitted on both expansion valve connections, or other solutions can be used, depending on the layout of the installation.

2.3 Flow of refrigerant and spatial orientation of the valve

The recommended direction of connection (Figure 2.c) sees the inlet on the side of the valve; nonetheless, the CAREL E^2V valves are bi-directional up to the pressure differential specified on the instruction sheet.

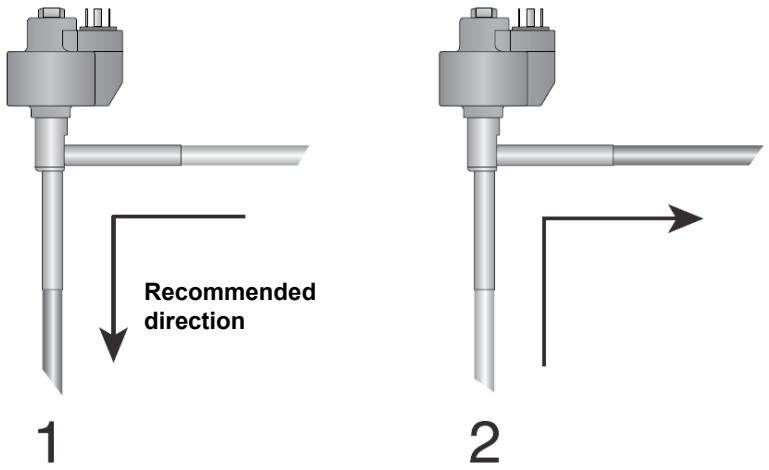

Fig. 2.d

Important: in no circumstances is upside-down installation allowed, that is, with the stator facing downwards.

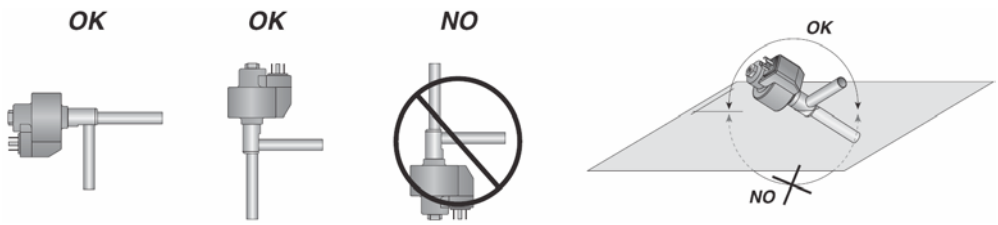

Fig. 2.e

2.4 Welding

Unscrew the locking nut and remove the stator (winding). If necessary, remove the connector if inserted. Before starting welding, wrap the body of the valve (without the stator) in a wet rag, to avoid overheating the inside parts. When finished welding, replace **the stator** and **tighten the** valve-stator **locking nut**.

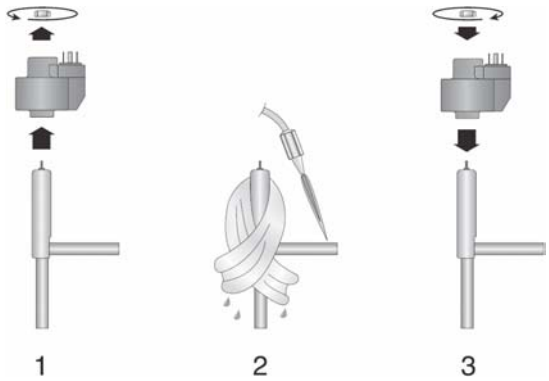

Fig. 2.f

Observe the following warnings:

- do not let water or other foreign bodies/fluids inside the valve:
  this would make it impossible to completely clean the parts inside;
- preferably use the side fitting on the valve for the refrigerant inlet;
- do not install the valve with the stator facing downwards;
- install a mechanical filter immediately upstream of the valve;
- preferably install a sight glass upstream of the valve, so as to be able to check correct flow during operation;
- remove the stator from the valve body during the assembly;
- for welded connections, wrap the valve body in a wet rag before starting welding;
- never point the flame directly at the valve body;
- never exert twisting or deforming forces on the valve body or on the pipes connected to it;
- do not exert excessive pressure on the stator when fitting it to the valve so as to avoid deforming the plastic cap at the bottom of the stator;
- do not hit the valve with hammers or other tools, nor drop the valve;
- never place the valve near magnets and/or magnetic fields;
- take extreme care to ensure no impurities enter the refrigerant circuit;
- do not install or use the valve if there is deformation or damage to the visible parts (outer cap and connection pipes);
- do not install following strong impact, for example after dropping the valve;
- do not install or use if the stator (winding), contact carrier or connector are damaged.

Fig. 2.g

3. Positioning the probes

The purpose of the control action of the electronic valve is to maintain the refrigerant superheat at the evaporator outlet around the desired value (superheat set point). In general, if the superheat is greater than the set point, the controller will open the valve, and vice-versa.
To measure the superheat, the driver uses 2 probes that measure the suction temperature and the evaporation pressure of the refrigerant at the evaporator outlet.
The pressure is used to calculate the saturated evaporation temperature, and the difference between the suction temperature and the saturated evaporation temperature gives the superheat.

3.1 Ideal position of the probes

The ideal position for both probes is immediately at the evaporator outlet, so as to be able to measure the effective refrigerant superheat.

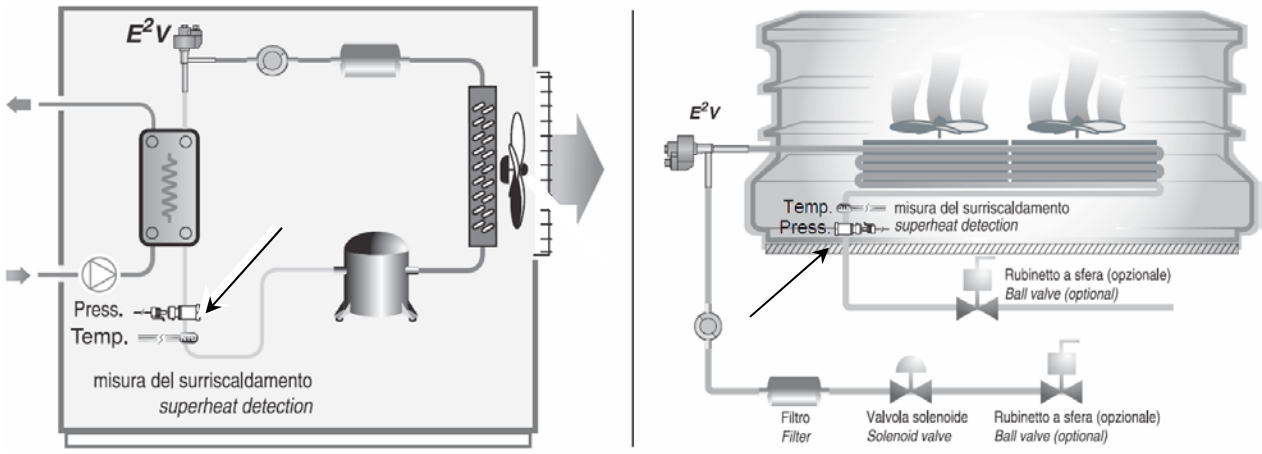

Fig. 3.a

3.2 Positioning with external pressure probe

If there is the need to simplify the inspection and replacement of the pressure probe, or to share the reading of the probe between master and slave utilities (for multiplexed showcases with controllers that support this function), the pressure probe can be installed outside of the showcase and away from the temperature probe. **This is possible only where there is no device that alters the pressure, creating a pressure drop in the section that separates the two probes** (in particular, the liquid/gas exchanger that is often installed downstream of the evaporator).

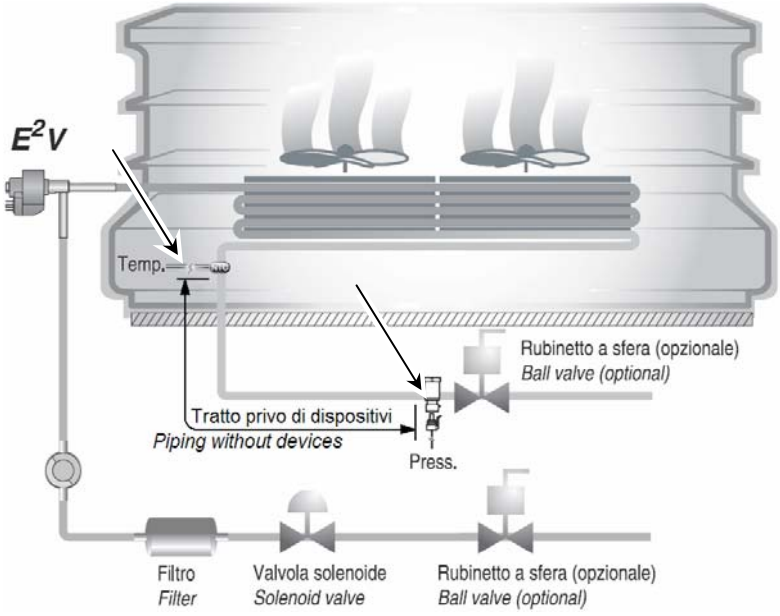

Fig. 3.c

3.3 Positioning for reverse-cycle heat pumps (E^2V in bi-directional operation)

In this case, the pressure and temperature probes should be installed in the common suction branch (low pressure) in the refrigerant circuit.
Given the reduced distance between the point where the superheat is measured and the compressor, the control settings and the superheat set point will need to be calibrated to safe values.

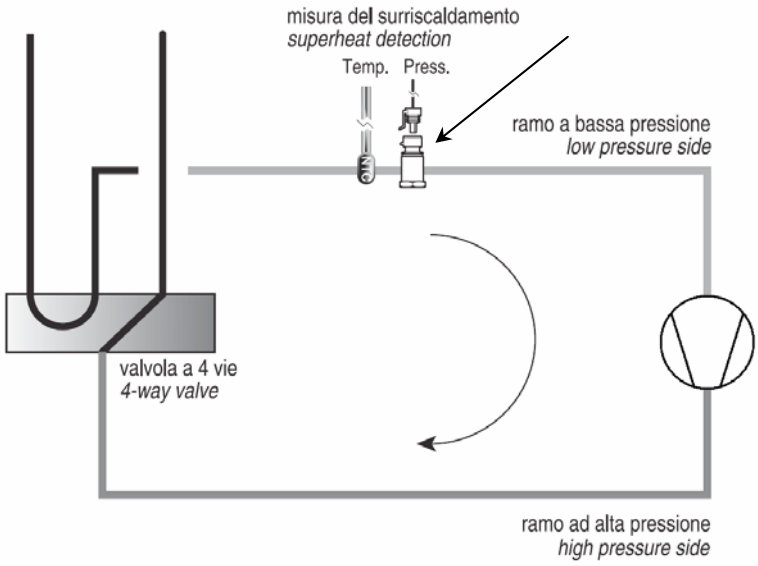

Fig. 3.d

4. Installing the probes

4.1 Suction temperature probe

The temperature probe must be selected based on the application.
Showcases/cold rooms: **NTC***HF**** (with clamp) or NTC***HP**.
Air-conditioners/chillers: **NTC***WF**** preferably in a socket, or NTC***HF** or NTC***HP**.

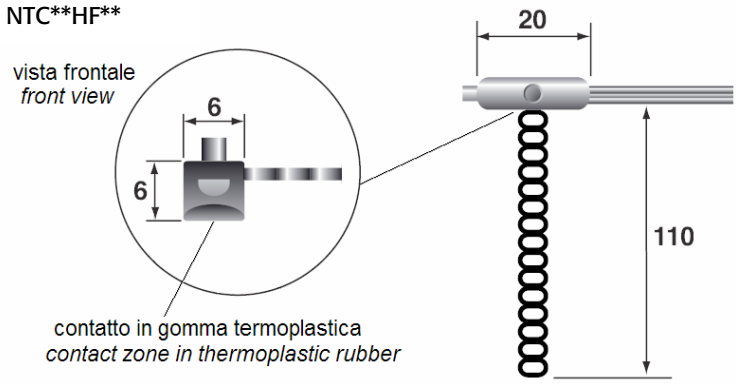

Fig. 4.a

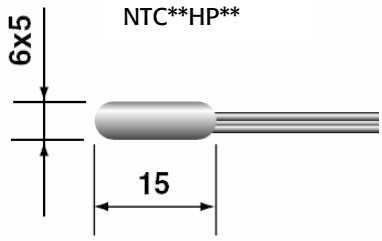

Fig. 4.b

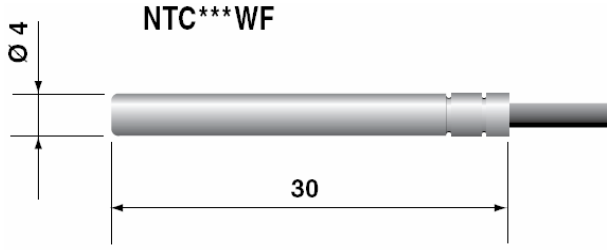

Fig. 4.c

The position of this probe is extremely important, as it determines the accuracy of the superheat value and the speed of response to variations in this.
The probe should be installed after the evaporator outlet, in a straight and horizontal section. Comparing the section of pipe to the face of a clock, the probe must be positioned at 12 o'clock for pipes with a diameter less than 22 mm, and at 4.30 or 7.30 for pipes with a diameter greater than or equal to 22 mm.

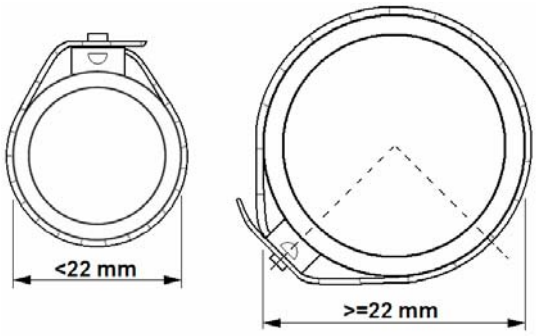

Fig. 4.d

All precautions must be taken to maximise the thermal coupling between the pipe and probe, spreading conductive paste on the point of contact between the probe and the pipe, fastening the probe with a clamp (included with the NTC***HF**).
The probe cable must be looped in the immediate vicinity of the probe and then secured by elastic band; this will prevent significant variations in temperature (such as those that occur during the defrost cycles) that may damage the cable connection to the probe.
Finally, the pipe-probe assembly should first be covered with aluminium tape, and then with insulating material.

No types of adhesive should be used, to avoid ruining the plastic material used to make the probe or the cable.

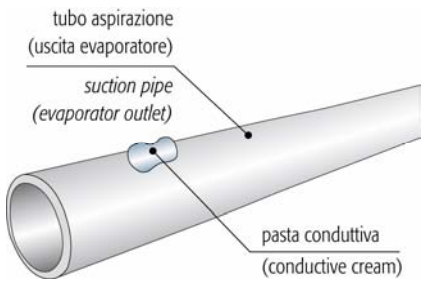

Fig. 4.e

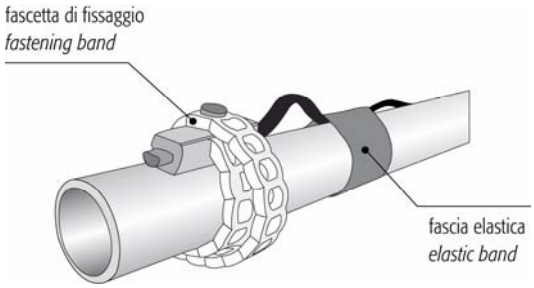

Fig. 4.f

In air-conditioners/above-zero chillers, where better measurement precision and a faster response is required, the NTC***WF** probe should be used, with installation in a socket.
Good thermal coupling must be guaranteed between the socket and the probe, applying abundant conductive paste inside the socket. The inside diameter of the socket must a little larger (no more than 0.5 mm) than the diameter of the probe. The probe + socket assembly should then be covered with heat insulation.

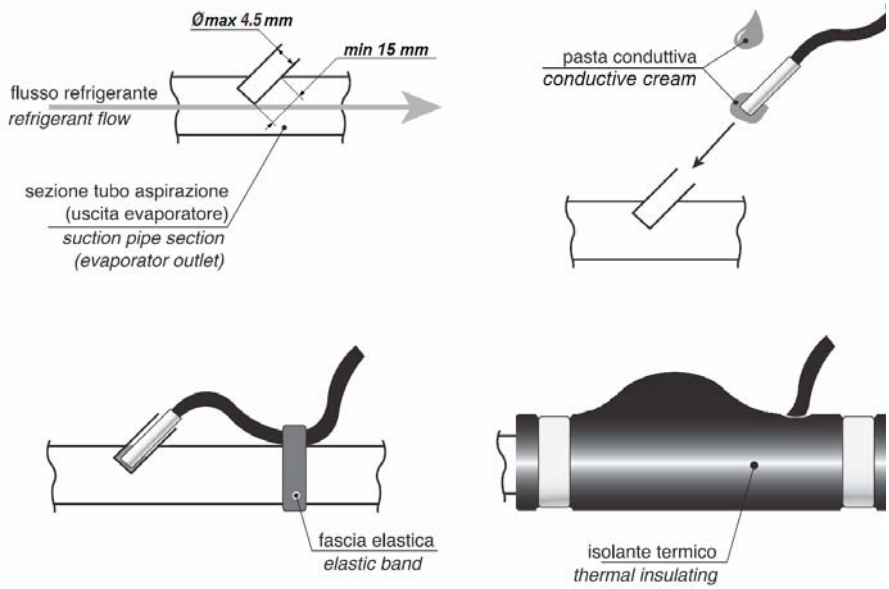

Fig. 4.h

NOTE: avoid using **a socket for below-zero showcases or cold rooms** where ice frequently forms on the pipe, and may damage the socket.

4.2 Evaporation pressure transducer

The pressure transducer must be installed near the temperature probe on the top of the pipe. It can be positioned away from the point of temperature measurement only if the section of pipe that separates the two probes does not contain devices that alter the pressure (heat exchangers, flow indicators, valves, etc.).

Depending on the type of controller, two types of pressure transducer can be used, which differ as regards the output signal:

0.5-4.5 V ratiometric type **SPKT****R0** per Evd400, MasterCase 1 and 2, mpxPRO

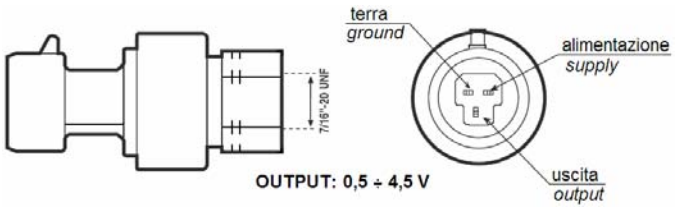

Fig. 4.j

4-20mA type **SPKT****C0** for Evd200-300, MasterCase 2, mpxPRO

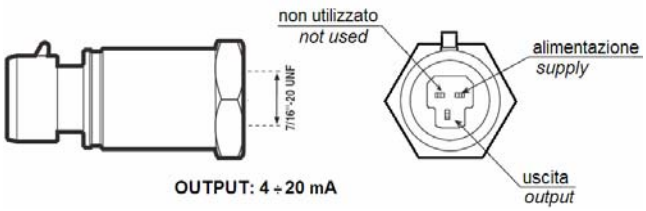

Fig. 4.i

Both types of transducers use the **SPKC****** 3-wire cable** with Packard co-moulded connector. The ratiometric transducer uses all and three wires, the 4-20 mA transducer only uses two (the green wire is not used).

Each pressure transducer is supplied with a different range of measurement. The parameters corresponding to the minimum and maximum pressure of the transducer used then need to be set.
The range that is most suitable for the application must be selected based on the following parameters:

- measurement precision: improves if the range of evaporation pressure of the utility is in the centre of the range of measurement of the transducer.
- high pressure alarm: to avoid the probe alarm being generated, even when the utility is off for extended periods, the pressure must reach lower values than the maximum measurable range.
- maximum limit: each transducer has a maximum limit beyond which it may be damaged. This must never be reached.
- explosion limit: each transducer has an explosion limit beyond which the safety of the installation and the probe is not guaranteed. This must never be reached.

In standard applications with HCFC and HFC refrigerants, the following ranges are suggested:
ratiometric code SPKT0013R0 (from -1 to 9.3 barg)
4-20 mA code SPKT0011C0 (from 0 to 10 barg).

To improve the measurement precision, transducers with a reduced range can be used:

- ratiometric code SPKT0053R0 (from -1 to 4.2 barg);
- 4-20 mA code SPKT0021C0 (from -0.5 to 7 barg).

In this case, however, broken/disconnected alarms may be signalled, during the periods in which control is not active. When the unit is off, in fact, the pressure at the evaporator outlet may exceed the maximum measurement of the transducer, due to the balancing of the pressure in the refrigerant circuit; in this case, the driver will signal a probe fault alarm.

5. Electrical connections

5.1 Connecting the valve to the driver

The following operations are required for the connection of the valve to the driver:

A) Completely insert the stator into the valve body and tighten the locking nut. Never leave the stator in place without the locking nut or with the nut partially unscrewed, as water may infiltrate inside.

B) Fit the cable with the co-moulded IP67 connector code E2VCAB**, connecting the connector to the stator and fastening it carefully with the screw provided. IP67 protection is not guaranteed if the screw is not properly secured.
A shielded cable code E2VCABS* is also available where necessary.
Pay special attention to the polarity of the connectors: contact no. 4, which on the stator is facing the valve body, is wider than the other three. Do not forcefully insert the connector unless you are sure the orientation is correct. If the orientation is incorrect, the valve will not be able to move correctly.

Bbis) Alternatively, a standard DIN 43650 B connector code E2VCON** can be used, wiring the 4 poles to a 4-wire AWG 18-22 cable (0.5-1 mm^2) with an outside diameter of 4-6 mm to ensure the seal of the gasket on the cable gland and with a maximum length of 10 m. Note the colours used for the 4 poles, so that when connecting the cable to the driver, the numbering on the connector corresponds to the numbering on the driver. Important: contact no. 4 on the connector is usually marked with the earth symbol. In this case, the corresponding wire must not be earthed, but rather connected, just like the other wires, to the corresponding terminal (4) on the driver.

C) Finally connect the wires on the other end of the cable to the terminals on the driver, carefully following the instructions shown on the driver instruction sheet, and observing the correct sequence of the colours. If connected incorrectly, the valve may not move or may move in reverse compared to the direction controlled by the driver.

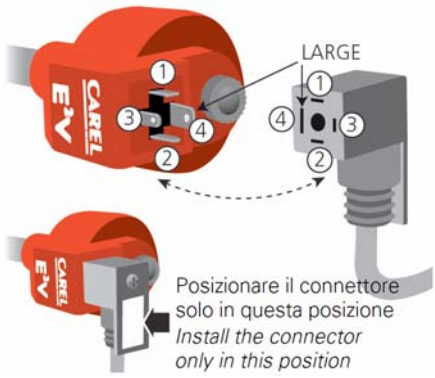

Fig. 5.a

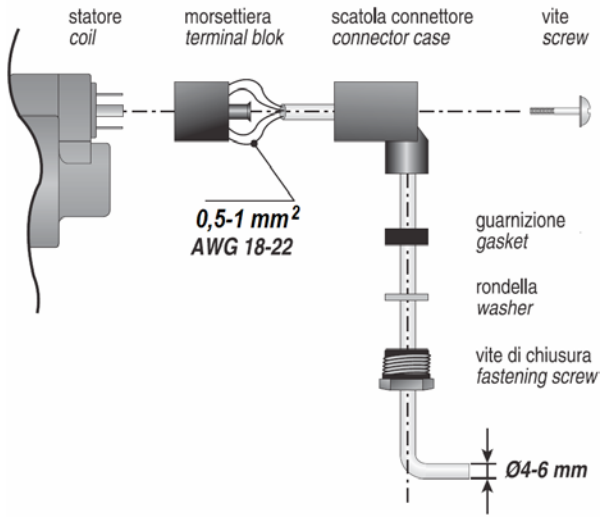

Fig. 5.b

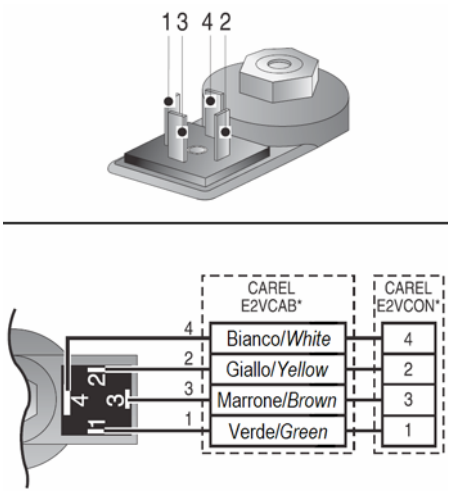

Fig. 5.c

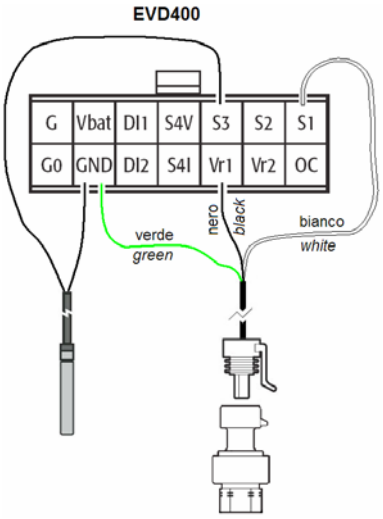

Fig. 5.d

5.2 Probe and power supply connections

Then complete the wiring of the driver, following the information provided on the instruction sheet supplied in the packaging.
Connect the 24 V power supply, the optional battery module, the optional communication LAN (pLAN, tLAN or RS485), the alarm relay, if used, the digital input for enabling control, if used, and finally the temperature and pressure probes.

- temperature probe: 2 wires, indifferent polarity;
- ratiometric pressure probe SPKT*R0: 3 wires, earth (green), 5 Vdc power supply (black) and signal (white);
- 4-20mA pressure probe SPKT*C0: 2 wires, 2-28 Vdc power supply (black) and signal (white).

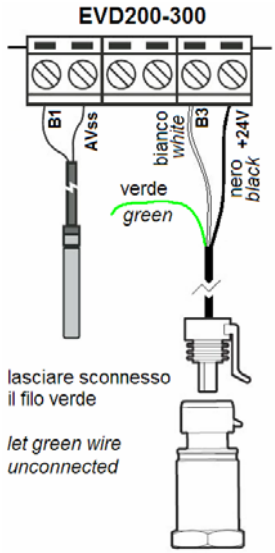

Fig. 5.e

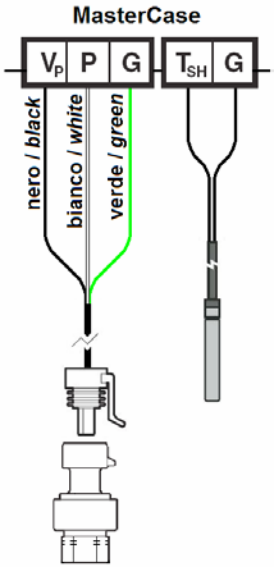

Fig. 5.f

If the driver is used with the RS485 serial or pLAN address setting via hardware (with microswitches, binary logic) as for the EVD200 and EVD300, refer to the corresponding instruction sheets to set the communication address. To make the configuration, lift the front panel that houses the signal LEDs and set the position of microswitches from 1 to 5, making sure not to damage the flat connection cable to the main printed circuit.

5.3 Battery module connection (for closing the valve)

The EVBAT00*00 battery modules are electronic devices that guarantee temporary power supply to the EVD200-300-400 drivers and the built-in driver on the mpxPRO (chapter 6). Powered by a backup battery, these provide continuous voltage to the driver for the time required to **completely close the electronic valve in the event of mains power failures,** while during normal operation the module makes sure the battery is recharged.

Battery modules for EVD200 and EVD300:

- EVBAT00100: complete kit including the power supply/battery charger, 3 x 6V 1.2 Ah batteries and the set of connection cables, and can supply just one valve.
- EVBATBOX00: support for 3 batteries with DIN rail mounting.
- 6436503AXX: spare battery

Battery modules for EVD400 and mpxPRO:

- EVBAT00300: complete kit including the power supply/battery charger, 2 x 6V 1.2 Ah batteries and the set of connection cables, and can supply two valves at the same time.
- EVBATBOX10: support for 2 batteries with DIN rail mounting.
- 6436503AXX: spare battery
- 59C545A003: spare set of connection cables
- EVBAT00200: spare power supply/battery charger module.

Below are the connection diagrams of the two modules to the corresponding drivers and the dimensional drawings of the battery supports.

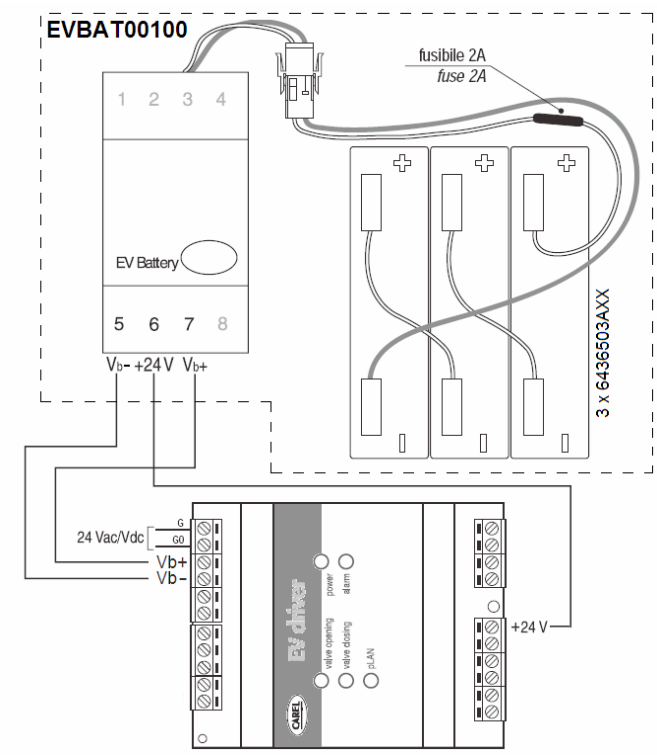

Fig. 5.g

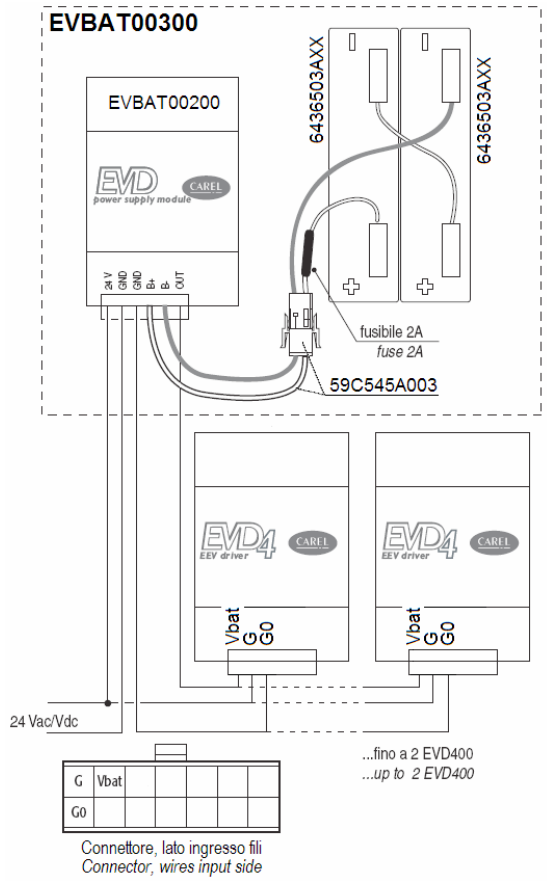

Fig. 5.h

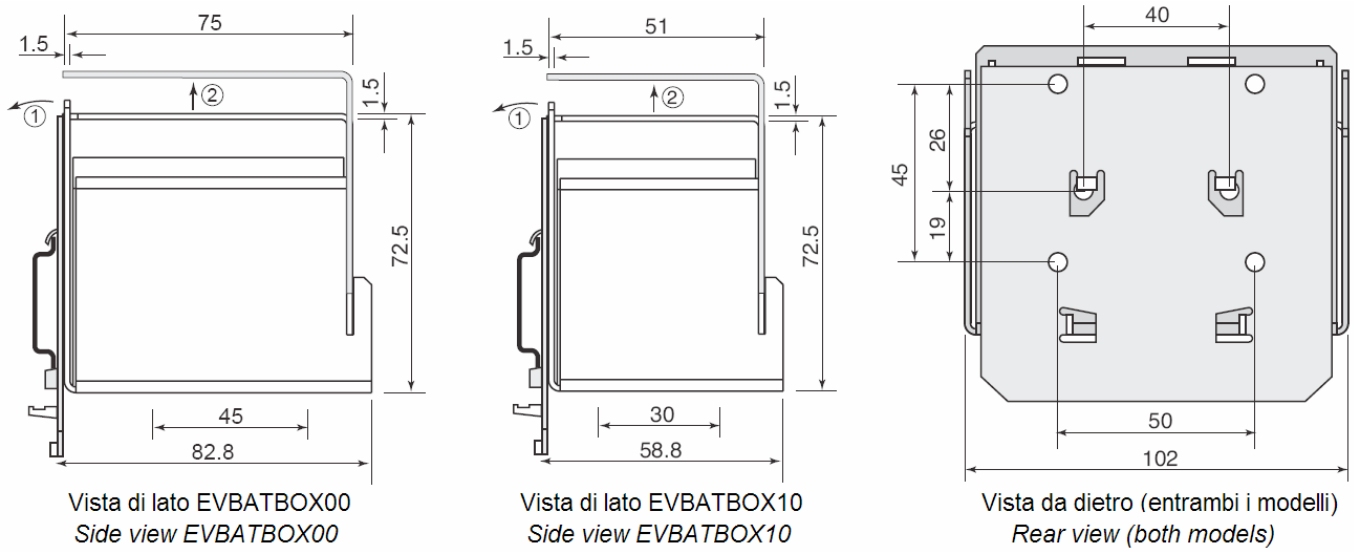

Fig. 5.j

6. Electronic valve control devices

There are different types of driver and different controllers with built-in drivers.

6.1 Drivers

The drivers (EVD family) mainly differ as regards:

- type of pressure transducer (ratiometric or 4-20 mA)
- user interface for programming the parameters
- local network connection (tLAN, pLAN, RS485 supervisor).

A pLAN or tLAN connection is fundamental if the driver needs to be used together with a programmable pCO controller that manages the refrigerating showcase/air-conditioner. This gives optimum results both as concerns the programming interface (this can be customised), the operation of the driver, based on the needs of the unit, and the sharing and management of probes, alarms and signals.

If not compatible with the pLAN or tLAN, the driver must operate in stand-alone mode, activating and deactivating control of the valve based on the status of the digital input:

- digital input open: the driver closes the valve and deactivates control
- digital input closed: the driver opens the valve and starts control

In some models, positioner operating mode can be activated, in which the driver moves the valve exclusively based on an analogue input signal (4-20 mA or 0-10 V, corresponding linearly to 0 % and 100 % opening). When the driver works in this mode, control of the valve and all the alarms are disabled.

Model	EVD200	EVD300	EVD400 tLAN	EVD400 pLAN	EVD400 RS485
Code	**EVD0000200**	**EVD0000300**	**EVD0000400/430**	**EVD0000410/440**	**EVD0000420/450**
Software user interface	pCO controller via pLAN	PC with PlantVisor	PC with EVD4_UI; pCO or µC via tLAN	PC with EVD4_UI; pCO via pLAN	PC with EVD4_UI or PlantVisor
Hardware user interface	5 signal LEDs	5 signal LEDs	NO	NO	NO
Connectable to supervisor	NO	YES	NO	NO	YES
Connectable in pLAN	YES	NO	NO	YES	NO
Control activation	From pLAN (pCO)	From digital input	From tLAN (pCO, µC2)	From pLAN (pCO)	From digital input
Type of pressure transducer	4 to 20 mA	4 to 20 mA	Ratiometric	Ratiometric	Ratiometric
Type of terminals	Fixed screw	Fixed screw	Plug-in Minifit	Plug-in Minifit	Plug-in Minifit
Network address setting	Hardware with microswitches	Hardware with microswitches	Software with EVD4_UI; Key EVDKEY0001	Software with EVD4_UI; Key EVDKEY0001	Software with EVD4_UI; Key EVDKEY0001
Range of network addresses	1 to 31	1 to 31	1 to 200	1 to 32	1 to 200
Control as positioner	NO	4 to 20 mA	4-20 mA or 0-10 V	4-20 mA or 0-10 V	4-20 mA or 0-10 V
Battery module	EVBAT00100	EVBAT00100	EVBAT00300	EVBAT00300	EVBAT00300

Tab. 6.a

Models EVD0000400, EVD0000410, EVD0000420 can be configured to control different types of valves with stepper motor (CAREL, Sporlan, Alco, Danfoss).
Models EVD0000430, EVD0000440, EVD0000450 on the other hand are pre-configured for CAREL valves only.

All models of EVD400 are available in multiple packages (10 pcs), code EVD00004*1.

Finally, it should be noted that **for applications with lower cooling capacities, the use of an on-off solenoid valve is recommended**, rather than the battery module, considering the lower cost of the valves compared to the batteries.

6.2 Controllers with built-in driver

Some specific CAREL controllers for showcases and cold rooms include the hardware and software for the management of electronic valves; these are programmed in different ways.

Model	MasterCase	MasterCase 2	MPXPRO
Code	**MGE000*020**	**MC200N0B10**	**MX20**3* or MX20**5***
Software user interface	PC with PlantVisor	PC with PlantVisor	PC with PlantVisor
Hardware user interface	PST terminal with 3 or 6 buttons	PST terminal with 3 buttons, PGD0 terminal with 4 rows	IR00U** terminal with 4 buttons
Supervisor connection	YES	YES	YES
pLAN connection	NO	NO	NO
Control activation	Direct by built-in controller	Direct by built-in controller	Direct by built-in controller
Type of pressure transducer	Ratiometric	4 to 20 mA or ratiometric	4 to 20 mA or ratiometric
Type of terminals	Plug-in screw	Plug-in screw	Plug-in screw
Network address setting	Software via terminal	Software via terminal	Software via terminal
Range of network addresses	1 to 200	1 to 200	1 to 200
Control as positioner	NO	NO	NO
Battery module	NO	NO	EVBAT00300

Tab. 6.b

It is obvious that these controllers do not require a LAN connection to the driver, as this is built into the controller. The driver user interface, both software that hardware, is part of the controller user interface.

Finally, it should be noted that **for applications with lower cooling capacities, the use of an on-off solenoid valve is recommended**, rather than the battery module, considering the lower cost of the valves compared to the batteries.

7. Control devices: basic parameter settings

To be able to start control, some fundamental parameters need to be set.

- **Refrigerant**
- **Model of valve**
- **Minimum value pressure of the pressure transducer installed (barg)**
- **Maximum pressure value of the pressure transducer installed (barg)**
- **Battery module fitted (where available)**

All the other parameters can be left at the default values, and configured at a later stage.

Nonetheless, it is suggested to read the following paragraphs and set the recommended parameters for the different applications (paragraph 8.3).

8. Control devices: advanced parameter settings

The control of the electronic valve can be divided into two categories: superheat control with reference to the corresponding set point, and control of unit safety with protectors that are activated only if the pressure or temperature reach dangerous values that can be set by the user.

8.1 Superheat control parameters

The superheat control function involves calculating the position of the valve based on the reading of the superheat and the corresponding set point.
As control is PID (Proportional, Integral, Derivative), hereinafter the control algorithm will simply be called "PID".
The PID is the sum of three distinct actions:

Proportional action (P), defined by parameter K = proportional gain.
The proportional action opens or closes the valve by K steps whenever the superheat increases or decreases by 1 °C.
Consequently, the higher the value of K, the faster the reaction of the valve to variations in the superheat.
The proportional action is fundamental, as it affects the speed of response of the valve in general, however it only considers the variation in the superheat, and not the corresponding set point.
Therefore if the superheat does not vary significantly, the valve will essentially remain steady and the superheat set point may not be reached.

Integral action (I), defined by parameter Ti = integration time (sec)
The integral action is related to time and makes the valve move in proportion to how far the superheat temperature is away from the set point. The higher the difference, the more intense the integral action; the lower the integration time (Ti), the more intense be the integral action.
The integral action is required to ensure that the superheat reaches the set point. Without this, in fact, the proportional action alone may stabilise the superheat at a value other than the set point.

Derivative action (D), defined by parameter Td = derivative time (sec)
The derivative action is related to the speed with which the superheat varies, that is, the instant-by-instant gradient of superheat variation. This tends to contrast sudden variations in the superheat, bringing forward the corrective action; the effect is more intense the higher the time Td.

Valve opening at start-up, defines the percentage of opening that the valve moves to immediately before starting superheat control and should be set so as to be near the normal working position during control.
As an initial approximation, it can be determined by calculating the ratio between the cooling capacity of the evaporator and the cooling capacity of the valve. A 10 kW valve installed on a 5 kW evaporator will presumably operate at 50 % opening.
The following parameters are involved:

- Valve opening at start-up (EVAP/EEV capacity ratio)
- Superheat set point
- PID: proportional gain
- PID: integration time
- PID: derivative time

8.2 Protection function control parameters

The software that manages the valve includes four protection functions:

• LowSH protection (low superheat)
• LOP protection (low evaporation temperature)
• MOP protection (high evaporation temperature)
• HITCond protection (high condensing temperature, optional)

The LowSH protection acts quickly to close the valve in the event where the superheat is too low, to prevent the return of liquid to the compressor.
The LOP protection acts quickly to open the valve when the evaporation temperature is too low, to prevent the compressor from stopping due to low pressure.
The MOP protection acts moderately to close the valve and limit the evaporation temperature if this reaches excessive values, so as to prevent the compressor from stopping due to thermal overload.
The HITCond protection, can only be enabled if the controller measures the condensing pressure/temperature, acts moderately to close the valve if the condensing temperature reaches excessive values to prevent the compressor from stopping due to high pressure.

Each of these protectors features a **threshold** and an **integration time**; the activation speed of the protectors is higher the lower the corresponding integration time. The threshold, on the other hand, is defined depending on the compressor and the application.
The use of the protectors is recommended, however this is at the user's discretion.

8.3 Recommended parameters

Below are the most suitable values of the parameters for each application and **specifically for CAREL valves**. If valves made by other manufacturers are used, the same recommended parameters can be used initially, modifying the "Proportional gain" based on the maximum number of control steps for the valve installed.

Example of adapting the proportional gain for the different valves

Reference:
CAREL E2V (480 maximum control steps), proportional gain = 5

→ Sporlan SEI - 1, (1596 steps), proportional gain = 5 x 1596 / 480 = 16
→ Alco EX-5 (750 steps), proportional gain = 5 x 750 / 480 = 8

The following tables also show a specific category called perturbed system.

Perturbed system defines a refrigeration unit in which the condensing pressure and/or the refrigerant charge vary continuously and rapidly. The superheat can also vary when the subcooling is low or null (critical refrigerant charge) and the superheat set point is less than the value specified in the tables or low in general.

In a perturbed system, the control variables (superheat and evaporation temperature) vary significantly, however not due to the electronic valve, which consequently must have more intense reactions to be able to keep the superheat around the set point. Obviously, the more perturbed the system, the lower the probability of achieving a stable superheat.

SHOWCASES - COLD ROOMS				Multiplexed	With compressor on board	Perturbed system
PID	Shset	Superheat set point	°C	11	6	11
	K prop	PID: proportional gain	-	15	15	25
	Ti	PID: integration time	s	150	100	250
	Td	PID: derivative time	s	5	2	5
PROTECTORS	LowSH	LowSH prot.: threshold	°C	5	2	5
	LowSH Ti	LowSH prot.: integration time	s	15	10	25
	LOP	LOP prot.: threshold	°C	0	-45 °C (LT) -25 °C (NT)	0
	LOP Ti	LOP prot.: integration time	s	0	10	0
	MOP	MOP prot.: threshold	°C	-15 °C (LT) +5 °C (NT)	-15 °C (LT) +5 °C (NT)	-15 °C (LT) +5 °C (NT)
	MOPTi	MOP prot.: integration time	s	20	20	30
	MOP HiTsurr	MOP prot.: maximum superheated gas temperature limit	°C	30	30	30
	MOP Delay	MOP prot.: activation delay at start	s	60	30	60
	HiTcond	HiTcond prot.: threshold	°C	0	60	0
	HiTcond Ti [1]	HiTcond prot.: integration time	s	0	20	0

Tab. 8.a – Recommended parameters for SHOWCASE and COLD ROOM applications (RETAIL)

REFRIGERATION WITH SUBCRITICAL CO_2				Multiplexed showcases/cold rooms with subcritical CO_2	Condenser on R404a for subcritical CO_2 [2]
PID	SHset	Superheat set point	°C	13	7
	K prop	PID: proportional gain	-	20	15
	Ti	PID: integration time	sec	400	150
	Td	PID: derivative time	sec	5	5
PROTECTORS	LowSH	LowSH prot.: threshold	°C	7	3
	LowSH Ti	LowSH prot.: integration time	sec	15	10
	LOP	LOP prot.: threshold	°C	0	0
	LOP Ti	LOP prot.: integration time	sec	0	0
	MOP	MOP prot.: threshold	°C	-15 °C	0
	MOP Ti	MOP prot.: integration time	sec	20	0
	MOP HiTsurr	MOP prot.: maximum superheated gas temperature limit	°C	30	0
	MOP Delay	MOP prot.: activation delay at start	sec	60	0
	HiTcond	HiTcond prot.: threshold	°C	0	0
	HiTcond Ti	HiTcond prot.: integration time	sec	0	0

Tab. 8.b – Recommended parameters for SHOWCASE and COLD ROOM applications WITH SUBCRITICAL CO_2

[1] The HiTcond protection can only be enabled if the condenser probe is connected to the driver and its value is sent via LAN. Otherwise the Integration time must be set to 0.

[2] Only to be used with electronic valves for superheat control on plate exchangers with R404a for cascade condensers of compressor racks with subcritical CO_2.

AIR-CONDITIONERS - CHILLERS				Plate evaporator	Tube bundle evaporator	Finned coil evaporator
PID	SHset	Superheat set point	°C	6	6	6
	K prop	PID: proportional gain	-	3	5	10
	Ti	PID: integration time	sec	40	60	100
	Td	PID: derivative time	sec	1	1	2
PROTECTORS	LowSH	LowSH prot.: threshold	°C	2	2	2
	LowSH Ti	LowSH prot.: integration time	sec	2.5	2.5	10
	LOP [3]	LOP prot.: threshold	°C	-5	-5	-5
	LOP Ti	LOP prot.: integration time	sec	4	4	10
	MOP	MOP prot.: threshold	°C	12	12	12
	MOP Ti	MOP prot.: integration time	sec	10	10	20
	MOP HiTsurr	MOP prot.: maximum superheated gas temperature limit	°C	30	30	30
	MOP Delay	MOP prot.: activation delay at start	sec	30	30	30
	HiTcond	HiTcond prot.: threshold	°C	60	60	60
	HiTcond Ti [4]	HiTcond prot.: integration time	sec	10	10	20

Tab. 8.c – Recommended parameters for AIR-CONDITIONERS – CHILLERS

AIR-CONDITIONERS - CHILLERS				Variable cooling capacity (steps, inverter)	Perturbed system
PID	SHset	Superheat set point	°C	6	6
	K prop	PID: proportional gain	-	15	20
	Ti	PID: integration time	sec	150	100
	Td	PID: derivative time	sec	5	15
PROTECTORS	LowSH	LowSH prot.: threshold	°C	2	2
	LowSH Ti	LowSH prot.: integration time	sec	10	15
	LOP [2]	LOP prot.: threshold	°C	-5	-5
	LOP Ti	LOP prot.: integration time	sec	10	15
	MOP	MOP prot.: threshold	°C	12	12
	MOP Ti	MOP prot.: integration time	sec	20	30
	MOP HiTsurr	MOP prot.: maximum superheated gas temperature limit	°C	30	30
	MOP Delay	MOP prot.: activation delay at start	sec	30	30
	HiTcond	HiTcond prot.: threshold	°C	60	60
	HiTcond Ti [3]	HiTcond prot.: integration time	sec	20	30

Tab. 8.d – Recommended parameters for AIR-CONDITIONERS - CHILLERS (continued)

[3] The LOP threshold is set between the limit of the low pressure switch and the design evaporation temperature. If using a water-glycol mix, the threshold must be adapted to values that are ate least 5 °C lower than the evaporation temperature.

[4] The HiTcond protection can only be enabled if the condenser probe is connected to the driver and its value is sent via LAN. Otherwise the Integration time must be set to 0.

9. Start-up

When starting control for the first time, make sure that:

1) the electronic valve opens and starts controlling when the start control signal is sent (from digital input, pLAN, tLAN or built-in controller);
2) the valve position constantly follows the superheat value, opening or closing when the superheat increases or decreases;
3) the refrigerant flows through the evaporator and the air or water temperature of the controlled utility moves towards the set point.

If the previous checks fail, check the electrical connections, the water circuit and the parameter settings.
See the following chapter on troubleshooting.

During control, the following also need to be checked:

4) the superheat is always around the set point, with swings that, depending on how perturbed the system is, vary between 0.2 °C and 4 °C;
5) the valve position always continues to follow the superheat, increasing or decreasing around the working position;
6) The controlled utility reaches the set point or the required air or water temperature;
7) There is no return of liquid to the compressor.

If the previous checks fail, refer again to the following chapter on troubleshooting.

9.1 Selecting the superheat set point

The superheat set point should be selected based on the recommended value described in chapter 8, and set as established by the design specifications of the controlled utility.

Nonetheless, it should be stressed that the corresponding parameter can be modified at any time, so as to change the control reference, exactly in the same way as calibrating a traditional thermostatic valve.

A **low set point** ensures better efficiency of the evaporator, a lower air or water temperature and the temperature control set point is reached more easily. Nonetheless, instability may be created in the system, with wider swings in the superheat and the return of liquid to the compressor.

A **high set point** ensures greater system stability and less or negligible swings in the superheat. Nonetheless, this may penalise the efficiency of the evaporator and prevent the temperature control set point from being reached.

9.2 Control techniques

The control parameters should only be changed from the recommended values (chapter 8) when it is clear how these affect the control functions.

Considering, as mentioned, that a lower superheat set point causes swings but often ensures higher efficiency, any changes to the parameter settings must be made with the objective of the achieving the best compromise between:

- lowering the utility control temperature or reaching the control set point more quickly;
- system stability.
- no return of liquid to the compressor.

In general, to avoid control problems that cause damage to the compressor, the following rules should be observed:

- only change the value of one parameter at a time;
- monitor the superheat trend, the valve position and the utility control temperature for at least 10-30 min before deciding whether a change has improved or worsened the situation;
- if necessary, extend the period of normal temperature control by temporarily lowering the utility set point, so as to better check the trend in the superheat;
- check a complete set of parameters in all unit operating conditions (start after extended stop, temperature control active, defrost, changes in cooling capacity).

As concerns the control parameters, the following general indications can be used as a guide:

Proportional gain (from 3 to 30)
Increasing the proportional gain K increases the reaction speed of the valve and is recommended if the system is particularly perturbed or to make superheat control faster. If high (>20), may cause swings and instability.

Integration time (from 40 to 400 sec)
Increasing the integration time Ti improves stability but makes the valve slower in reaching the superheat set point. If lowered (<40 sec) generates swings and instability. If the system is already perturbed, high values (>150 sec) are suggested so as to avoid creating further disturbance.

Derivative time (from 0 to 10 sec)
Increasing the derivative time Td improves the reactivity of the valve, in particular in perturbed systems, reducing the amplitude of swings in the superheat. If high (>10 sec), may in turn generate excess reactivity and consequently swings.

Protector thresholds
The thresholds used for the 4 protectors should be set based on the features of the system being controlled.
All are expressed as temperatures (°C):

LOWER LIMIT		THRESHOLD		UPPER LIMIT
0 °C	<	LowSH (°C)	<	Superheat set point
LP pressure switch calibration (°C) [5]	<	LOP (°C)	<	design evaporation temperature
design evaporation temperature	<	MOP (°C)	<	compressor limit (10-15 °C)
design condensing temperature	<	HiTcond (°C)	<	HP pressure switch calibration (°C) [6]

Tab. 9.a

[5] The pressure switch calibration value, normally expressed as pressure, must be converted to °C (saturated)

10.Troubleshooting

The following table lists a series of situations of malfunctions that may occur when starting and operating the driver and the electronic valve. These cover the more common problems and provide an initial response to help resolve the fault.

PROBLEM	CAUSE	SOLUTION
The superheat value measured is incorrect	The probe does not measure correct values	Check that the pressure and the temperature measured are correct and that the probe position is correct. Check that the minimum and maximum pressure parameters for the pressure transducer set on the driver correspond to the range of the pressure probe installed. Check the correct probe electrical connections.
	The type of refrigerant set is incorrect	Check and correct the type of refrigerant parameter.
Liquid returns to the compressor during operating	The type of valve set is incorrect	Check and correct the type of valve parameter.
	The valve is connected incorrectly (rotates in reverse) and is open	Check the movement of the valve by placing it in manual control and closing or opening it completely. One complete opening must bring a decrease in the superheat and vice-versa. If the movement is reversed, check the electrical connections.
	The superheat set point is too low	Increase the superheat set point. Initially set it to 12 °C and check that there is no longer return of liquid. Then gradually reduce the set point, always making sure there is no return of liquid.
	Low superheat protection ineffective	If the superheat remains low for too long with the valve that is slow to close, increase the low superheat threshold and/or decrease the low superheat integration time. Initially set the threshold 3 °C below the superheat set point, with an integration time of 3-4 seconds. Then gradually lower the low superheat threshold and increase the low superheat integration time, checking that there is no return of liquid in any operating conditions.
	Stator broken or connected incorrectly	Disconnect the stator from the valve and the cable and measure the resistance of the windings using an ordinary tester. The resistance of both should be around 36 ohms. Otherwise replace the stator. Finally, check the electrical connections of the cable to the driver (see paragraph 5.1).
	Valve stuck open	Check if the superheating is always low (<2 °C) with the valve position permanently at 0 steps. If so, set the valve to manual control and close it completely. If the superheat is always low, check the electrical connections and/or replace the valve.
	The "valve opening at start-up" parameter is too high on many showcases in which the control set point is often reached **(for multiplexed showcases only)**	Decrease the value of the "Valve opening at start-up" parameter on all the utilities, making sure that there are no repercussions on the control temperature.
Liquid returns to the compressor only after defrosting (for multiplexed showcases only)	The pause in control after defrosting is too short **(for MasterCase, MasterCase 2 and mpxPRO only)**	Increase the value of the "valve control delay after defrosting" parameter.
	The superheat measured by the driver after defrosting and before reaching operating conditions is very low for a few minutes	Check that the LowSH threshold is greater than the superheat value measured and that the corresponding protection is activated (integration time > 0sec). If necessary, decrease the value of the integration time.
	The superheat measured by the driver does not reach low values, but there is still return of liquid to the compressor rack	Set more reactive parameters to bring forward the closing of the valve: increase the proportional factor to 30, increase the integration time to 250 sec and increase the derivative time to 10 sec.
	Many showcases defrosting at the same time	Stagger the start defrost times. If this is not possible, if the conditions in the previous two points are not present, increase the superheat set point and the LowSH thresholds by at least 2 °C on the showcases involved.
	The valve is significantly oversized	Replace the valve with a smaller equivalent.
Liquid returns to the compressor only when starting the controller (after being OFF)	The "valve opening at start-up" parameter is set too high	Check the calculation in reference to the ratio between the rated cooling capacity of the evaporator and the capacity of the valve; if necessary, lower the value.

PROBLEM	CAUSE	SOLUTION
The superheat value swings around the set point with an amplitude greater than 4°C	The condensing pressure swings	Check the controller condenser settings, giving the parameters "blander" values (e.g. increase the proportional band or increase the integration time). Note: the required stability involves a variation within +/- 0.5 bar. If this is not effective or the settings cannot be changed, adopt electronic valve control parameters for perturbed systems (see paragraph 8.3)
	The superheat swings even with the valve set in manual control (in the position corresponding to the average of the working values)	Check for the causes of the swings (e.g. low refrigerant charge) and resolve where possible. If not possible, adopt electronic valve control parameters for perturbed systems (see paragraph 8.3).
	The superheat does NOT swings with the valve set in manual control (in the position corresponding to the average of the working values)	As a first approach , decrease (by 30 to 50 %) the proportional factor. Subsequently try increasing the integration time by the same percentage. In any case, adopt parameter settings recommended for stable systems.
	The superheat set point is too low	Increase the superheat set point and check that the swings are reduced or disappear. Initially set 13 °C, then gradually reduce the set point, making sure the system does not start swinging again and that the unit temperature reaches the control set point.
In the start-up phase with high evaporator temperatures, the evaporation pressure is high	MOP protection disabled or ineffective	Activate the MOP protection by setting the threshold to the required saturated evaporation temperature (high evaporation temperature limit for the compressors) and setting the MOP integration time to a value above 0 (recommended 4 seconds). To make the protection more reactive, decrease the MOP integration time.
	Refrigerant charge excessive for the system or extreme transitory conditions at start-up **(for showcases only).**	Apply a "soft start" technique, activating the utilities one at a time or in small groups. If this is not possible, decrease the values of the MOP thresholds on all the utilities.
In the start-up phase the low pressure protection is activated (only for units with compressor on board)	The "Valve opening at start-up" parameter is set too low	Check the calculation in reference to the ratio between the rated cooling capacity of the evaporator and the capacity of the valve; if necessary lower the value (see paragraph 8.1).
	The driver in pLAN or tLAN configuration does not start control and the valve remains closed	Check the pLAN / tLAN connections. Check that the pCO application connected to the driver (where featured) correctly manages the driver start signal. Check that the driver is NOT in stand-alone mode.
	The driver in stand-alone configuration does not start control and the valve remains closed	Check the connection of the digital input. Check that when the control signal is sent that the input is closed correctly. Check that the driver is in stand-alone mode.
	LOP protection disabled	Set a LOP integration time greater than 0 sec.
	LOP protection ineffective	Make sure that the LOP protection threshold is at the required saturated evaporation temperature (between the rated evaporation temperature of the unit and the corresponding temperature at the calibration of the low pressure switch) and decrease the value of the LOP integration time.
	Solenoid blocked	Check that the solenoid opens correctly, check the electrical connections and the operation of the relay.
	Insufficient refrigerant	Check that there are no bubbles in the sight glass upstream of the expansion valve. Check that the subcooling is suitable (greater than 5 °C); otherwise charge the circuit.
	The valve is connected incorrectly (rotates in reverse) and is open	Check the movement of the valve by placing it in manual control and closing or opening it completely. One complete opening must bring a decrease in the superheat and vice-versa. If the movement is reversed, check the electrical connections.
	Stator broken or connected incorrectly	Disconnect the stator from the valve and the cable and measure the resistance of the windings using an ordinary tester. The resistance of both should be around 36 ohms. Otherwise replace the stator. Finally, check the electrical connections of the cable to the driver (see paragraph 5.1).
	Valve stuck closed	Use manual control after start-up to completely open the valve. If the superheat remains high, check the electrical connections and/or replace the valve.

PROBLEM	CAUSE	SOLUTION
The unit switches off due to low pressure during control (**only for units with compressor on board**)	LOP protection disabled	Set a LOP integration time greater than 0 sec.
	LOP protection ineffective	Make sure that the LOP protection threshold is at the required saturated evaporation temperature (between the rated evaporation temperature of the unit and the corresponding temperature at the calibration of the low pressure switch) and decrease the value of the LOP integration time.
	Solenoid blocked	Check that the solenoid opens correctly, check the electrical connections and the operation of the control relay.
	Insufficient refrigerant	Check that there are no bubbles of air in the liquid indicator upstream of the expansion valve. Check that the subcooling is suitable (greater than 5 °C); otherwise charge the circuit.
	The valve is significantly undersized	Replace the valve with a larger equivalent.
	Stator broken or connected incorrectly	Disconnect the stator from the valve and the cable and measure the resistance of the windings using an ordinary tester. The resistance of both should be around 36 ohms. Otherwise replace the stator. Finally, check the electrical connections of the cable to the driver (see paragraph 5.1).
	Valve stuck closed	Use manual control after start-up to completely open the valve. If the superheat remains high, check the electrical connections and/or replace the valve.
The showcase does not reach the set temperature, despite the value being opened to the maximum (**for multiplexed showcases only**)	Solenoid blocked	Check that the solenoid opens correctly, check the electrical connections and the operation of the relay.
	Insufficient refrigerant	Check that there are no bubbles of air in the liquid indicator upstream of the expansion valve. Check that the subcooling is suitable (greater than 5 °C); otherwise charge the circuit.
	The valve is significantly undersized	Replace the valve with a larger equivalent.
	Stator broken or connected incorrectly	Disconnect the stator from the valve and the cable and measure the resistance of the windings using an ordinary tester. The resistance of both should be around 36 ohms. Otherwise replace the stator. Finally, check the electrical connections of the cable to the driver (see paragraph 5.1).
	Valve stuck closed	Use manual control after start-up to completely open the valve. If the superheat remains high, check the electrical connections and/or replace the valve.
The showcase does not reach the set temperature, and the position of the valve is always 0 (**for multiplexed showcases only**)	The driver in pLAN or tLAN configuration does not start control and the valve remains closed	Check the pLAN / tLAN connections. Check that the pCO application connected to the driver (where featured) correctly manages the driver start signal. Check that the driver is NOT in stand-alone mode.
	The driver in stand-alone configuration does not start control and the valve remains closed	Check the connection of the digital input. Check that when the control signal is sent that the input is closed correctly. Check that the driver is in stand-alone mode.

CAREL reserves the right to make modifications or changes to its products without prior warning.

CAREL S.p.A.
Via dell'Industria, 11 - 35020 Brugine - Padova (Italy)
Tel. (+39) 049.9716611 Fax (+39) 049.9716600
http://www.carel.com - e-mail: carel@carel.com

Agency

Cod.: +030220811 Rel. 1.0 – 26/04/07