Библиотека СОК

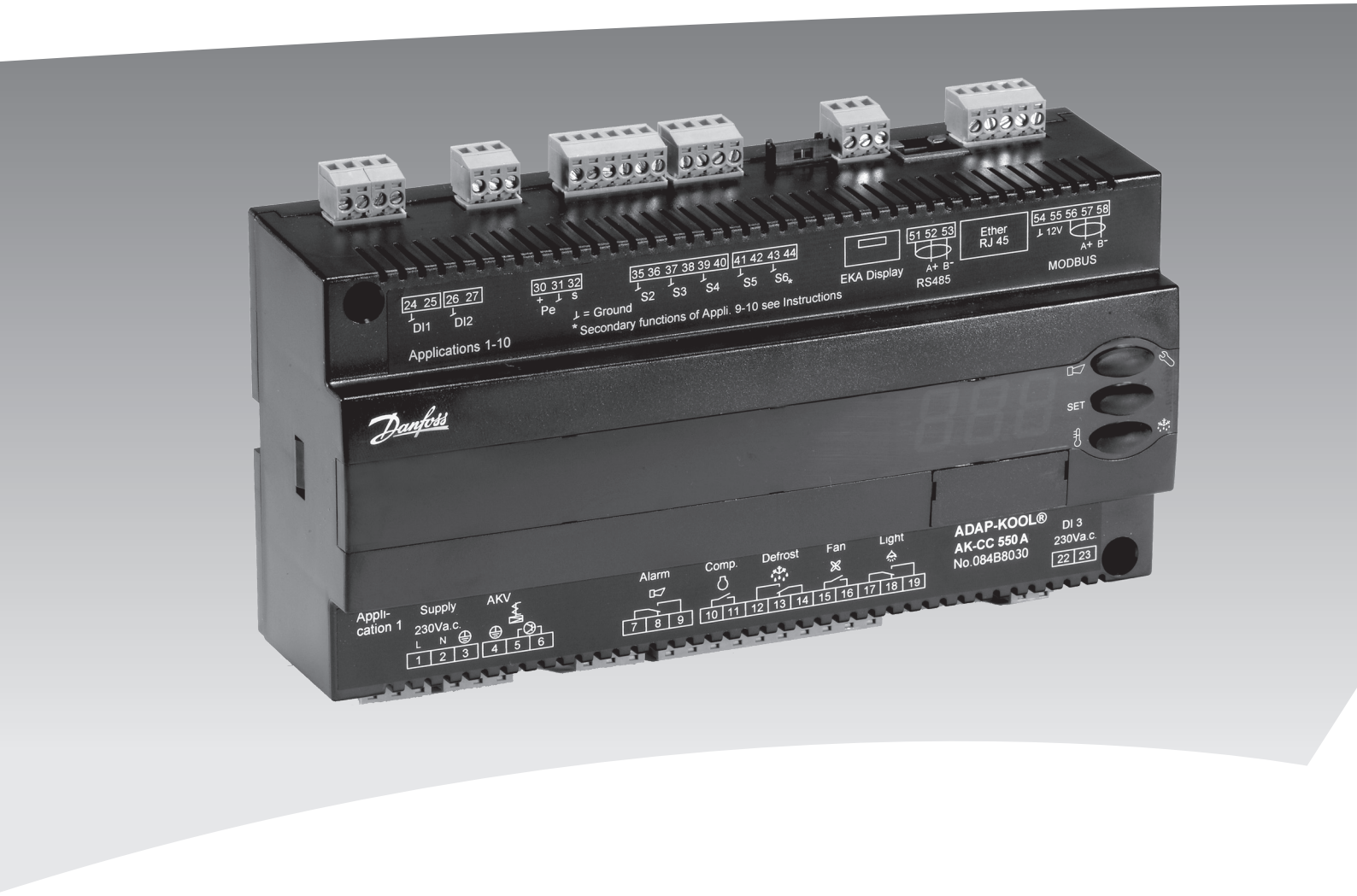

Controller for appliance control AK-CC 550A

Manual

СтолицаХолода
гипермаркет холода
создаем холод сохраняем тепло
www.stolicaholoda.ru

Introduction

Application
Complete refrigeration appliance control with great flexibility to adapt to all types of refrigeration appliances and cold storage rooms.

Advantages
- Energy optimisation of the whole refrigeration appliance
- One controller for several different refrigeration appliances
- Integrated display at the front of the controller
- Quick set-up with predefined settings
- Built-in data communication
- Built-in clock function with power reserve

Principle
The temperature in the appliance is registered by one or two temperature sensors which are located in the air flow before the evaporator (S3) or after the evaporator (S4) respectively. A setting for thermostat, alarm thermostat and display reading determines the influence the two sensor values should have for each individual function.
In addition product sensor S6, which can be optionally placed in the appliance, can be used to register the temperature near the required product in a certain place within the appliance.
The temperature of the evaporator is registered with the S5 sensor which can be used as a defrosting sensor.
In addition to the outlet to the electronic injection valve of the type AKV, the controller has 5 relay outputs which are defined by the use selected – the individual usage options are described in detail on page 12.

Functions
- Day/night thermostat with ON/OFF or modulating principle
- Product sensor S6 with separate alarm limits
- Switch between thermostat settings via digital input
- Adaptive control of superheat
- Adaptive defrosting based on evaporator performance
- Start of defrost via schedule, digital input or network
- Natural, electric or hot gas defrost
- Stop of defrost on time and/or temperature
- Coordination of defrosting among several controls
- Pulsing of fans when thermostat is satisfied
- Case cleaning function for documentation of HACCP procedure
- Rail heat control via day/night load or dew point
- Door function
- Control of two compressors
- Control of night blinds
- Light control
- Heat thermostat
- Factory calibration that will guarantee a better measuring accuracy than stated in the standard EN 441-13 without subsequent calibration (Pt 1000 ohm sensor)
- Integrated MODBUS communication with the option of mounting a LonWorks communication card

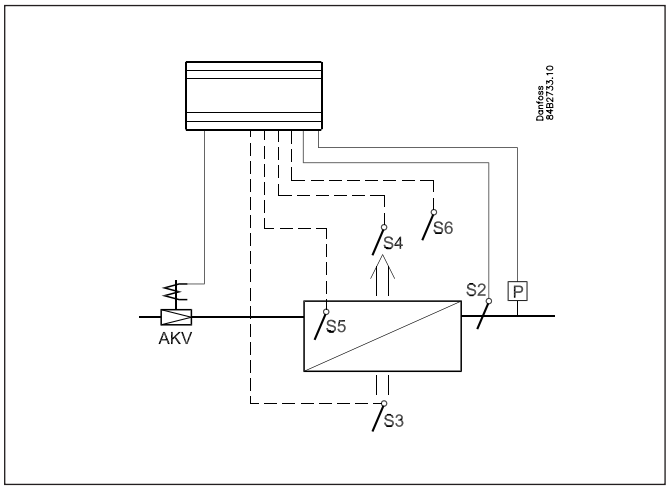

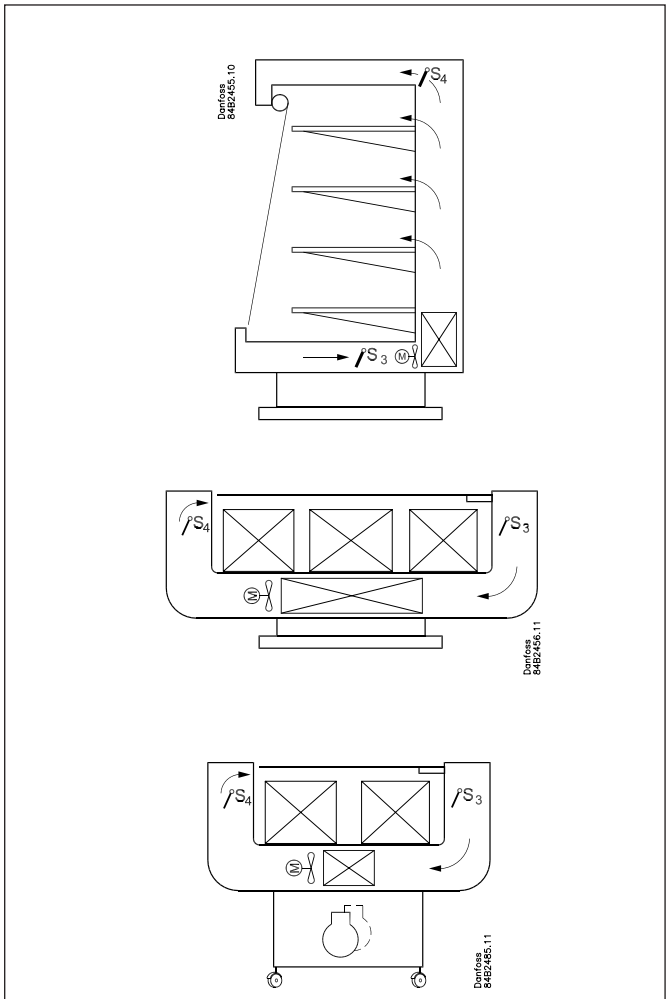

Appliance examples

Contents

Introduction 2
Operation 4
Applications 12
Survey of functions 15
Operation 26
Menu survey 28
Connections 32
Data 34
Ordering 35

СтолицаХолода
гипермаркет холодильного оборудования
создаем холод сохраняем тепло
www.stolicaholoda.ru

Applications

Here is an overview of the controller's usage options.
A setting will configure input and outputs so that the controller's operation interface is directed at the selected application.
The current settings for the respective uses can be found on page 28.

Application 1-8
These uses are applied to standard appliances or cold storage rooms with one valve, one evaporator and one refrigeration section.
The sensors are used according to standard principles.
The output functions change depending on the selected application.

Application 9
This use is for refrigeration appliances with one valve, two evaporators and two refrigeration sections.
Here the temperature and alarm monitoring are always controlled using the S4 sensor.
The S3 sensor is used for display readings.
The product sensor is replaced by an extra defrosting sensor S5B for the second evaporator.

Application 10
This use is for refrigeration appliances with one valve, one evaporator and two refrigeration sections.
Here temperature is always controlled using the S4 temperature.
The S6 sensor is placed in the S3B position. The S3B sensor uses alarm limits, etc which are normally used for the S6 sensor.
The two S3 temperatures are used for alarm monitoring and display readings for each refrigeration section. There are separate alarm limits for each refrigeration section.

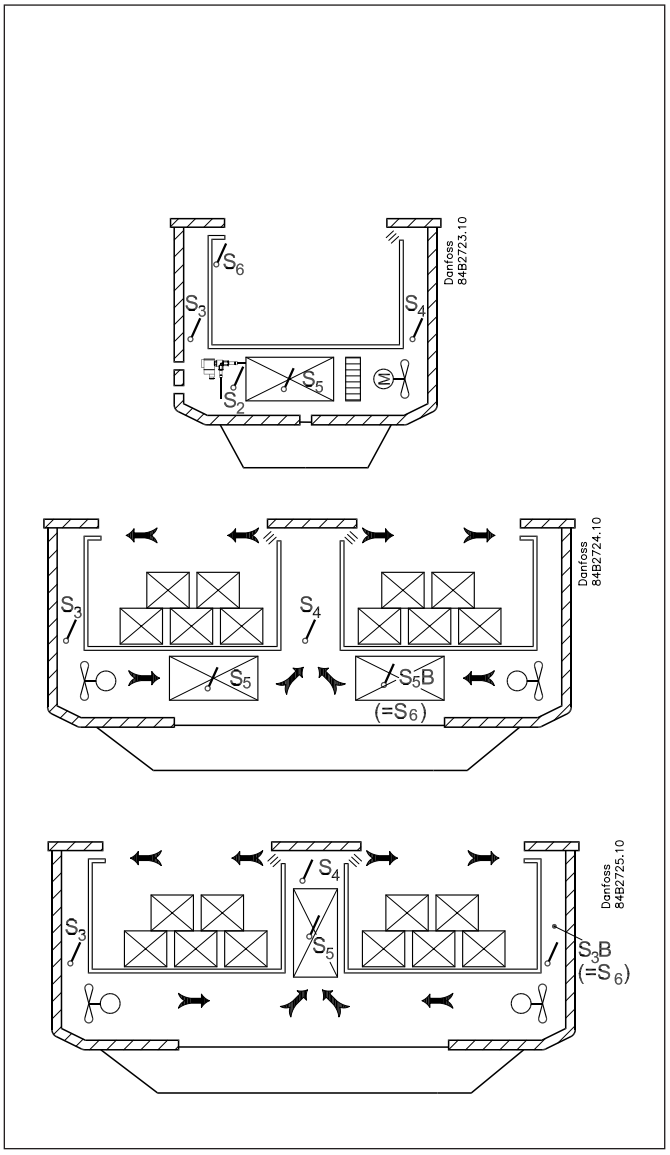

СтолицаХолода гипермаркет холодильного оборудования создаем холод сохраняем тепло www.stolicaholoda.ru

Operation

Liquid injection
Liquid injection in the evaporator is controlled by an electronic injection valve of the type AKV. The valve functions as both expansion valve and solenoid valve. The valve opens and closes using signals from the controller.
The function contains an adaptive algorithm which independently adjusts the valve's opening so that the evaporator constantly supplies optimum refrigeration.

Superheat can be measured via:
- Pressure sensor P0 and temperature sensor S2
  For this use a correct measurement of superheat is achieved under all conditions which ensures a very robust and precise control.
  The signal from one pressure transmitter can be used by several controllers, but only if there is no significant pressure difference between the evaporators in question.

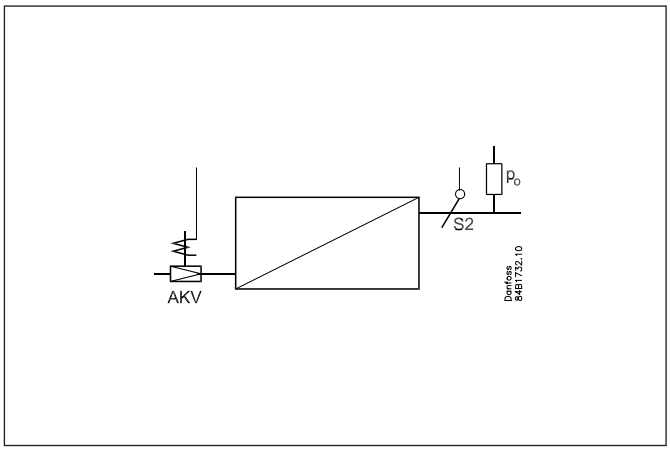

Temperature control
The temperature in the appliance is registered by one or two temperature sensors which are located in the air flow before the evaporator (S3) or after the evaporator (S4) respectively. A setting for the thermostat, alarm thermostat and display reading determines how much the two sensor values should influence each individual function, e.g. 50% will produce an equal value from both sensors.

The actual temperature control can take place in two ways: as an ordinary ON/OFF regulation with a differential, or as a modulating control there the temperature variation will not be nearly as great as in ON/OFF control. There is however a limit to the use of a modulating control as it can only be used in central plant. In a decentralised plant the thermostat function with ON/OFF control should be selected.
In a central plant the thermostat function may either be selected for ON/OFF control or modulating control.

Temperature monitoring
Just as is possible for the thermostat, the alarm monitoring can be set with a weighting between S3 and S4 so that you can decide how much the two sensor values should influence the alarm monitoring. Minimum and maximum limits can be set for alarm temperature and time delays. A longer time delay can be set for high temperature alarms after defrosting, appliance cleaning or start-up.

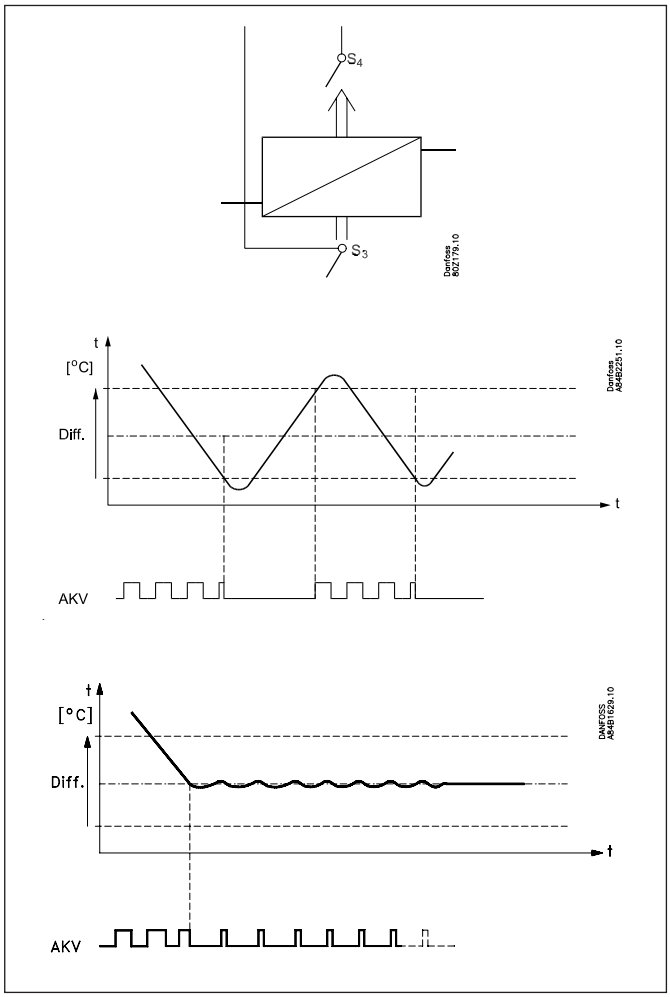

СтолицаХолода
гипермаркет холодильного оборудования
создаем холод сохраняем тепло
www.stolicaholoda.ru

Thermostat bands
Thermostat bands can be used beneficially for appliances where different product types are stored which require different temperature conditions. It is possible to change between the two different thermostat bands via a contact signal on a digital input. Separate thermostat and alarm limits can be set for each thermostat band – also for the product sensor.

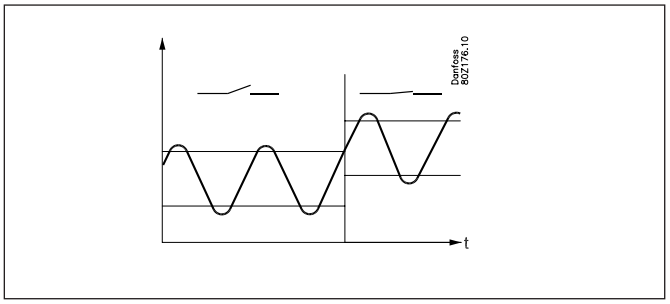

Night setback of thermostat value
In refrigeration appliances there may be big load differences between the shop's opening and closing hours, especially if night lids/blinds are used. The thermostat reference may be raised here without it having any effect on the product temperature.
Change-over between day and night operation can take place, as follows:
• via an external switch signal.
• via a signal from the data communication system.

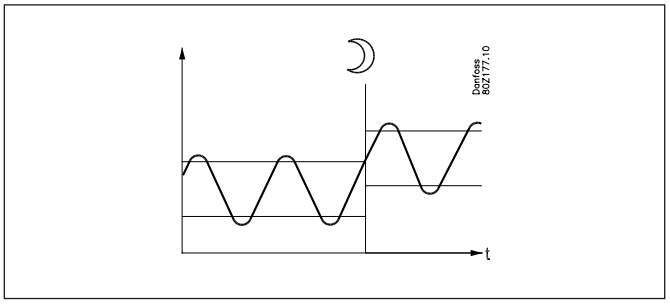

Product sensor
A separate optional product sensor S6, which may be placed in the appliance, can also be used and which can register and monitor the temperature in the warmest part of the appliance. There are separate alarm limits and time delays for the product sensor.

Appliance cleaning
This function makes it easy for the shop's staff to carry out a cleaning of the appliance according to a standard procedure. Appliance cleaning is activated via a signal – as a rule via a key switch placed on the appliance.
Appliance cleaning is carried out via three phases:
1 - at the first activation the refrigeration is stopped, but the fans keep on operating in order to defrost the evaporators. "Fan" is shown on the display.
2 - at the second activation the fans are also stopped and the appliance can now be cleaned. "OFF" is shown on the display.
3 - At the third activation refrigeration is recommenced. The display will show the actual appliance temperature, (o97 setting).

E	❄	✣	
-	+	+	°C
1	÷	+	Fan
2	÷	÷	Off
3	+	+	°C

When appliance cleaning is activated a cleaning alarm is transmitted to the normal alarm recipient. A later processing of these alarms will document that the appliance has been cleaned as often as planned.

Alarm monitoring
There are no temperature alarms during appliance cleaning.

СтолицаХолода
гипермаркет холодильного оборудования
создаем холод сохраняем тепло
www.stolicaholoda.ru

Defrost
Depending on the application you may choose between the following defrost methods:
Natural: Here the fans are kept operating during the defrost
Electric: The heating element is activated
Hotgas: Here the solenoid valves are controlled so that the hotgas can flow through the evaporator

Defrost sequence
1) Pump down
2) Defrost
3) Waiting position after defrost
4) Draining (drain delay. Hotgas only)
5) Drip off
6) Delay of fan

Hot gas defrost (application 6 only)
This type of connection can be used on systems with hotgas defrost, but only in small systems in, say, supermarkets – the functional content has **not** been adapted to systems with large charges
Relay 2 is used for suction valve
Relay 4's change-over function can be used by the bypass valve and/or the hotgas valve.
Must not be used together with PMLX and GPLX valves, unless a time delay relay is installed, which ensures that the PMLX/GPLX valve is closed completely before the hotgas is turned on.

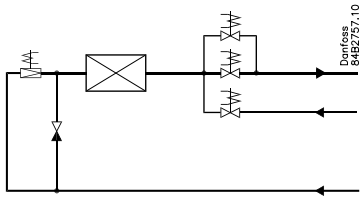

Hot gas application

Drip tray heating element
It is possible to control a heating element in the drip tray for hot gas defrosting. When defrosting is commenced, the heating element is activated. The heating element remains activated until a set time after defrosting has ended by time or temperature.

Start of defrost
A defrost can be started in different ways
Interval: Defrost is started at fixed time intervals, say, every eighth hour. An interval must ALWAYS be set to a "higher" value than the period set between two defrostings when a schedule or network signal is used.
Refrigeration time: Defrost is started at fixed refrigeration time intervals, in other words, a low need for refrigeration will "postpone" the defrost
Schedule: Here defrost can be started at fixed times of the day and night. However, max. 6 times
Contact: Defrost is started with a contact signal on a digital input
Network: The signal for defrost is received from a system unit via the data communication
Adaptive defrost: Here defrosting is started based on intelligent registering of evaporator performance.
Manual: An extra defrost can be activated from the controller's lower-most button
All the mentioned methods can be used at random – if just of them is activated a defrost will be started.

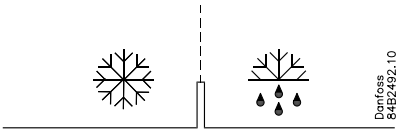

Stop of defrost
Defrosting can be stopped by either:
• Time
• Temperature (with time as safety).

СтолицаХолода
гипермаркет холодильного оборудования
создаем холод сохраняем тепло
www.stolicaholoda.ru

Coordinated defrost
There are two ways in which coordinated defrost can be arranged. Either with wire connections between the controllers or via data communication

Wire connections
The digital input DI2 is connected between the current controllers. When one controller starts a defrost all the other controllers will follow suit and likewise start a defrost. After the defrost the individual controllers will move into waiting position. When all are in waiting position there will be a change-over to refrigeration.

Coordination via data communication
Here the system unit handles the coordination.
The controllers are gathered in defrosting groups and the system unit ensures that defrosting is started in the group according to a weekly schedule.
When a controller has completed defrosting, it sends a message to the system unit and then goes into a waiting position. When every controller in the group is in a waiting position, refrigeration is again permitted in all the individual controllers.

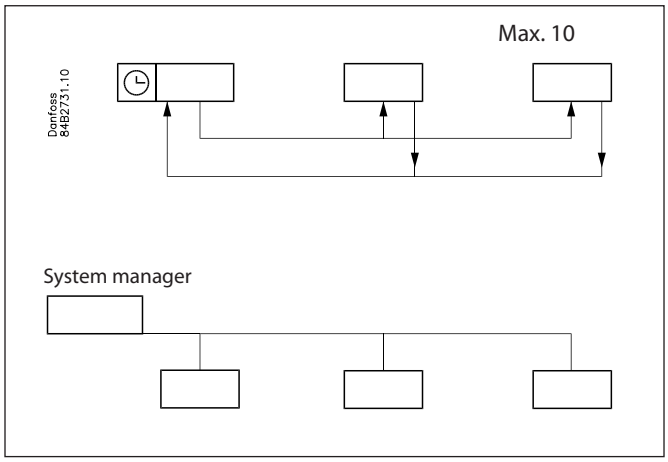

Defrost on demand
1 Based on refrigeration time
When the aggregate refrigeration time has passed a fixed time, a defrost will be started. (The function is not activated if the adaptive defrosting has been set to 2, 3 or 4.)

Adaptive defrosting:
This function assesses the need for self-defrosting. It may even start a defrost and may even cancel a scheduled defrost.
The following functions can be selected:
0 Off
1 Monitoring
A value is calculated for the evaporator air flow here.
An alarm will be triggered in the case of icing up or flash gas.
2 Adaptive day
Requires a night blind to be mounted on the appliance.
A value is calculated for the day evaporator air flow.
The evaporator is monitored during the day only, and the next scheduled defrost is carried out if required.
If the function does not require a defrost at the time of the scheduled defrost during the day, the defrost will not be carried out.
All scheduled defrosts are carried out during the night.
3 Adaptive day and night
Assuming that night blinds have not been mounted.
A value is calculated for the evaporator air flow.
The evaporator is monitored, and the next scheduled defrost will be carried out as required.
If the function does not require a defrost at the time of the scheduled defrost, the defrost will not be carried out.
4 Full adaptive (primarily on room)
A value is calculated for the evaporator air flow.
The evaporator is monitored, and a defrost will be carried out as required regardless of schedules.
All scheduled defrosts will also be carried out.

Adaptive defrosting requires the following connections:
- Expansion valve type AKV
- Temperature signal from both S3 and S4
- Temperature signal from the condensing pressure Pc which is distributed via the network from a system manager. The value should show the pressure in front of AKV valve. On plants where each part is not representative (transcritical CO2, etc.) may the signal from system manager not be used.

NOTE. The S3 and S4 sensors must be placed in the air flow/channel immediately before/after the evaporator.

Note
The function "Adaptive defrost" should only be activated when the evaporator runs under normal operational conditions.

Min. time between defrosts
There is a 2 hours minimum time between defrosts.
This avoids that planned defrosts in accordance with the weekly schedule are carried out immediately after a defrost on demand has been carried out. The time applies from when a defrost on demand has been completed to when a planned defrost is again permitted. The defrost on demand will not start defrosting with a shorter interval than the 2 hours either.

Melting function
This function will stop the air flow in the evaporator from being reduced by frost created by uninterrupted operation for a long time. The function is activated if the thermostat temperature has remained in the range between -5°C and +10°C for a longer period than the set melting interval. The refrigeration will then be stopped during the set melting period. The frost will be melted so that the air flow and hence the evaporator's capacity will be greatly improved.

Real-time clock
The controller has a built-in real-time clock which can be used to start defrosts. This clock has a power reserve of four hours.
If the controller is equipped with data communication, the clock will automatically be updated from the system unit.

СтолицаХолода
гипермаркет холодильного оборудования
создаем холод сохраняем тепло
www.stolicaholoda.ru

Control of two compressors
The two compressors must be of the same size. When the controller demands refrigeration it will first cut in the compressor with the shortest operating time. After the time delay the second compressor will be cut in.

When the temperature has dropped to "the middle of the differential", the compressor with the longest operation time will be cut out.
The running compressor will continue until the temperature has reached the cutout value. Then it will cut out. When the temperature again reaches the middle of the differential, a compressor will again be started.
If one compressor cannot maintain the temperature within the differential, the second compressor will also be started.
If one of the compressors has run on its own for two hours, the compressors will be changed over so that operational time is balanced.

The two compressors must be of a type that can start up against a high pressure.
The compressors's settings for "Min On time" and "Min Off time" will always have top priority during normal regulation. But if one of the override functions is activated, the "Min On time" will be disregarded.

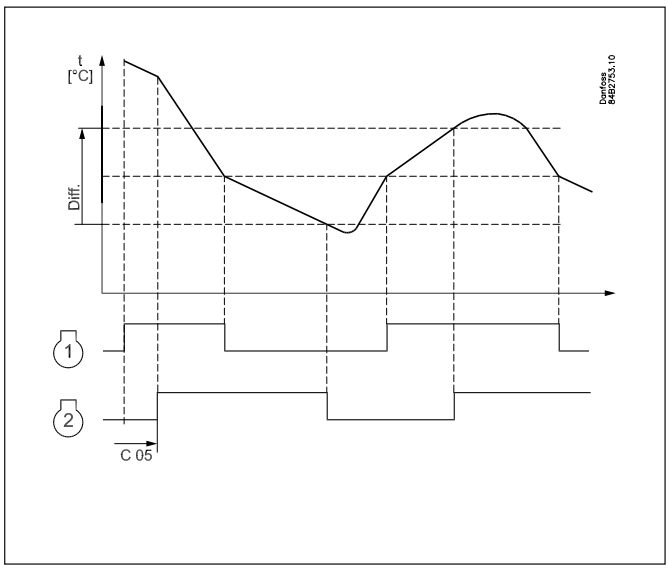

Railheat
It is possible to pulse-control the power to the rail heat in order to save energy. Pulse control can either be controlled according to day/night load or dew point.

Pulse control according to day and night
Various ON periods can be set for day and night operation.
A period time is set as well as the percentage part of the period in which the rail heat is ON.

Pulse control according to dew point
In order to use this function a system manager of the type AK-SM is required which can measure dew point and distribute the current dew point to the appliance controllers. For this the rail heat's ON period is controlled from the current dew point.
Two dew point values are set in the appliance control:
• One where the effect must be max. i.e.100%. (o87)
• One where the effect must be min. (o86).
At a dew point which is equal to or lower than the value in 086, the effect will be the value indicated in o88.
In the area between the two dew point values the controller will manage the power to be supplied to the rail heat.

During defrosting
During defrosting the rail heat will always be 100% ON.

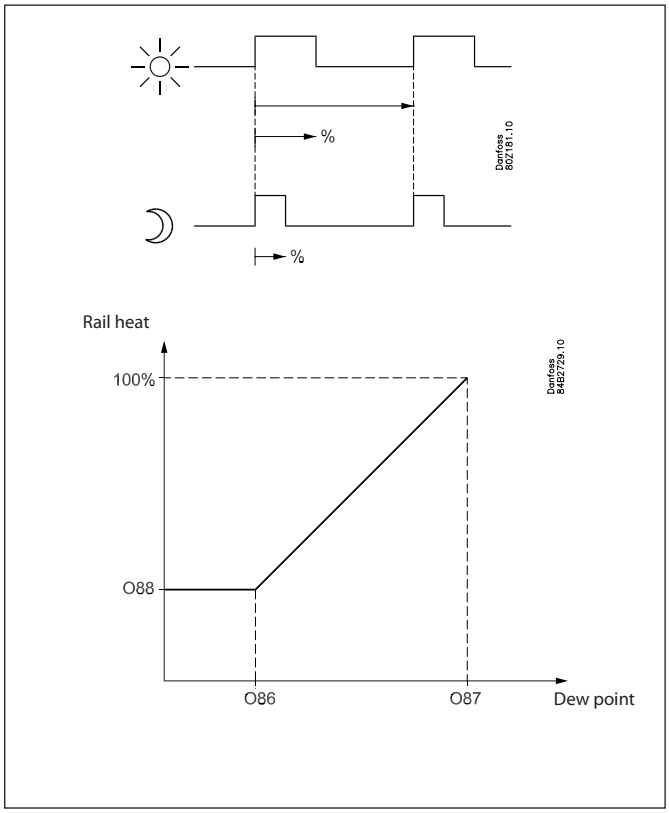

СтолицаХолода
гипермаркет холодильного оборудования
создаем холод
сохраняем тепло
www.stolicaholoda.ru

Fan

Pulse control
To obtain energy savings it is possible to pulse control the power supply to the fans at the evaporators.
Pulse control can be accomplished in one of the following ways:
- during the thermostat's cutout period (cold room)
- during night operation and during the thermostat's cutout period (appliance with night lid)

A period of time is set as well as the percentage of this period of time where the fans have to be operating.

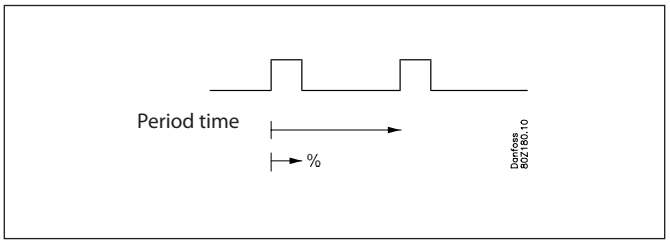

Cutout of fans during plant breakdowns
If the refrigeration in a breakdown situation stops, the temperature in the cold room may rise quickly as a result of the power supply from large fans. In order to prevent this situation the controller can stop the fans if the temperature at S5 exceeds a set limit value.

Light function

The function can be used for controlling the light in a refrigeration appliance or in a cold room. It can also be used for controlling a motorised night blind.

The light function can be defined in three ways:
- the light is controlled via a signal from a door contact. Together with this function a time delay can be set so that the light is kept on for a period of time after the door has been closed.
- the light is controlled via the day/night function
- the light is controlled via the data communication from a system unit.
  Here there are two operational options if data communication should fail:
  - The light can go ON
  - The light can stay in its current mode.

The light load must be connected to the NC switch on the relay. This ensures that the light remains on in the appliance if power to the controller should fail.
The light is switched off when "r12" (Main switch) is set to off (see o98).
The light is switched off when the appliance cleaning function is activated.

Night blind

Motorised night blind can be controlled automatically from the controller. The night blinds will follow the status of the light function. When the light is switched on, the night blinds opens and when the light is switched off, the night blinds close again.
When the night blinds are closed, it is possible to open them using a switch signal on the digital input. If this input is activated, the night blinds will open and the refrigeration appliance can be filled with new products. If the input is activated again, the blinds close again.
When the night blind function is used, the thermostat function can control with different weighting between the S3 and S4 sensors. A weighting during day operation and another when the blind is closed.
A night blind is open when the appliance cleaning function is activated.
A setting can define that the night blind is open when "r12" (Main switch) is set to off (see o98).

СтолицаХолода
гипермаркет холодильного оборудования
создаем холод сохраняем тепло
www.stolicaholoda.ru

Digital inputs
There are two digital inputs DI1 and DI2 with contact function and one digital input DI3 with high voltage signal.
They can be used for the following functions:
- Retransmission of contacts position via data communication
- Door contact function with alarm
- Starting a defrost
- Main switch - start/stop of cooling
- Night setback
- Thermostat bands switch
- General alarm monitoring
- Case cleaning
- Forced cooling
- Override of night blinds
- Coordinated defrost (DI2 only)
- Forced closing of valve (DI 3 only)

Forced closing
The AKV valves can be closed with an external signal ("Forced closing").
The function must be used in connection with the compressor's safety circuit, so that there will be no injection of liquid into the evaporator when the compressor is stopped by the safety controls. (However not at low pressure – LP).
If a defrost cycle is in progress, the forced closing status will not be re-established until the defrost is completed.
The signal can be received from the DI3-input or via the data communication.
During a forced closing the fans can be defined to be stopped or in operation.

Door contact
The door contact function can via the digital inputs be defined for two different applications:
Alarm monitoring
The controller monitors the door contact and delivers an alarm message if the door has been opened for a longer period than the set alarm delay.
Alarm monitoring and stop of refrigeration
When the door is opened the refrigeration is stopped, i.e. the injection, the compressor and the fan are stopped and light switch on.
If the door remains open for a longer time than the set restart time, refrigeration will be resumed. This will ensure that refrigeration is maintained even if the door is left open or if the door contact should be defective. If the door remains open for a longer period than the set alarm delay an alarm will also be triggered.

Heating function
The heating function is used to prevent the temperature becoming too low, e.g. in a cutting room, etc. The limit for when the heating function cuts off is set as an offset value under the current cutout limit for the refrigeration thermostat. This ensures that refrigeration and heating do not occur simultaneously.
The difference for the heating thermostat has the same value as for the refrigeration thermostat. To prevent that the heating thermostat cuts in during short-term drops in air temperature a time delay can be set for when to change from refrigeration to heating.

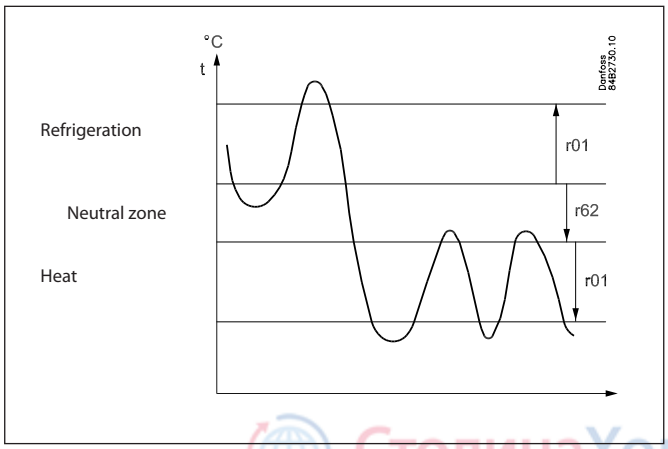

СтолицаХолода
гипермаркет холодильного оборудования
создаем холод
сохраняем тепло
www.stolicaholoda.ru

Data communication

The controller has fixed built-in MODBUS data communication.

If there is a requirement for a different form of data communication, a Lon RS 485 module can be inserted in the controller.
The connection must then be to terminal RS 485.

(To use a Lon RS 485 module and gateway type AKA 245 the module must be Version 6.20 or higher.)

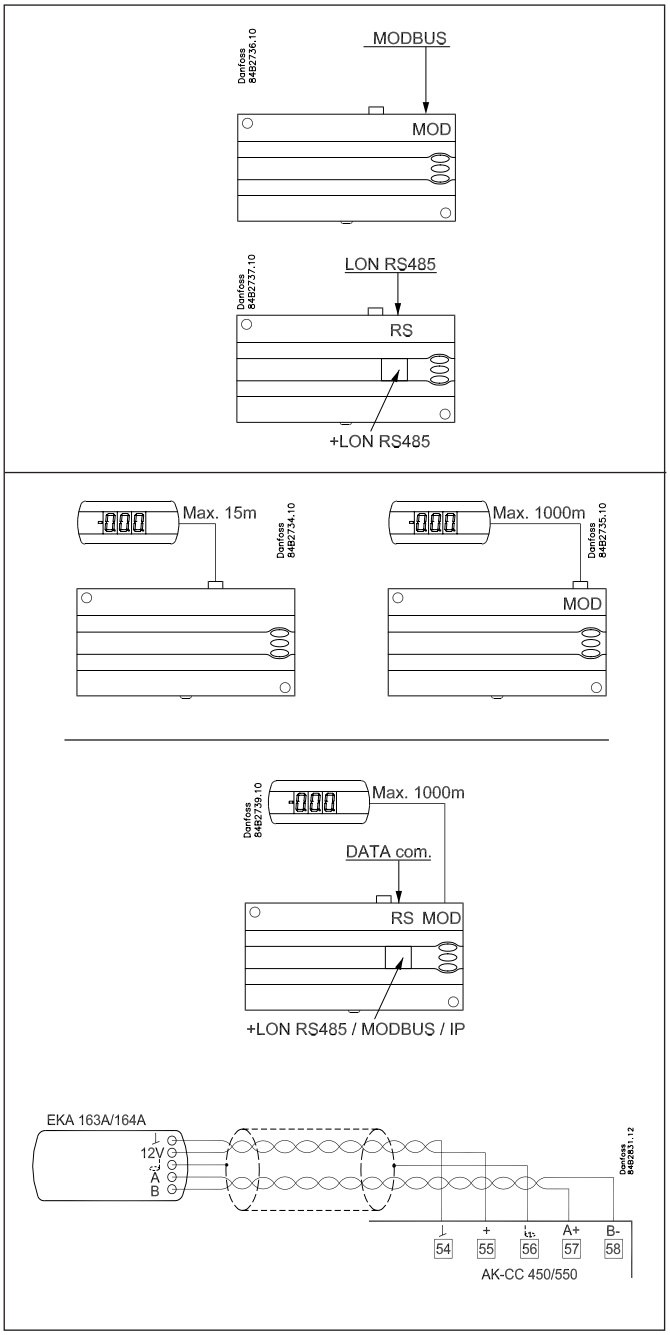

Display

The controller has one plug for a display. Here display type EKA 163B or EKA 164B (max. length 15m) can be connected.
EKA 163B is a display for readings.
EKA 164B is both for readings and operation.
The connection between display and controller may be with a cable which has a plug at both ends.

If the distance between display and controller is greater than 15 m, the connection must take another form.
An extra module must also be mounted in the controller if data communication is used.
The built-in MODBUS data communication is used so that the display connection and the data communication to the other controllers must take place via a module. The module can be: Lon RS 485 or MODBUS.
When a display is to be connected to the built-in MODBUS, the display can advantageously be changed to one of the same type, but with Index A (version with screw terminals).
If connection of two displays is required, one must be connected to the plug (max. 15 m) and the other must then be connected to the fixed data communication.

Important

All connections to the data communication MODBUS and RS 485 must comply with the requirements for data communication cables. See literature: RC8AC.

Override

The controller contains a number of functions which can be used together with the override function in the master gateway/system manager.

Function via data communication	Function in gateway/system manager	Used parameters in AK-CC 550A
Start of defrosting	Defrost control / Time schedule / Defrost group	--- Def start
Coordinated defrost	Defrost control / Defrost group	--- HoldAfterDef / - - - DefrostState
Prevent defrost start		--- Disable Def
Day/Night schedule	Day/Night control / Time schedule / Light zone	--- Night setback
Light control	Day/Night control / Time schedule	O39 light Remote
Forced closing	Forced Close / Injection ON / AKC ON	--- Forced cl.
Forced cooling		--- Forced cool
Railheat link to dew point	/ Enhanced railheat	--- Dew point
P0 optimization	P0 Optimization	The controller supports P0 optimization
Adaptive defrost	/ Adaptive defrost. System manager only	- - - Tc TempMean, MC Def.start

СтолицаХолода
гипермаркет холодильного оборудования
создаем холод сохраняем тепло
www.stolicaholoda.ru

Applications

Here is a survey of the controller's field of application.

A setting will define the relay outputs so that the controller's interface will be targeted to the chosen application.

On page 28 you can see the relevant settings for the respective wiring diagrams.

S3 and S4 are temperature sensors. The application will determine whether either one or the other or both sensors are to be used. S3 is placed in the air flow before the evaporator. S4 after the evaporator.
A percentage setting will determine how the control is to be based. S5 is a defrost sensor and is placed on/in the fins of the evaporator.
S6 is a product sensor, but in application 9 and 10 it has a different use.
DI1, DI2 and DI3 are contact functions that can be used for one of the following functions: door function, alarm function, defrost start, external main switch, night operation, change of thermostat reference, appliance cleaning, forced refrigeration or coordinated defrost. DI3 has a 230 V input. See the functions in settings o02, o37and o84.

General:
The ten uses are all adapted for commercial refrigeration systems in the form of either refrigeration appliances or cold storage rooms.
In general all have outputs for:
- AKV valve
- Fan
- Defrost

In addition they have different uses and thereby input and outputs.

Application 1-4
Standard applications.
This is for standard use where the vital difference is only different combinations of the following functions/outputs:
- Alarm
- Rail heat
- Compressor
- Light

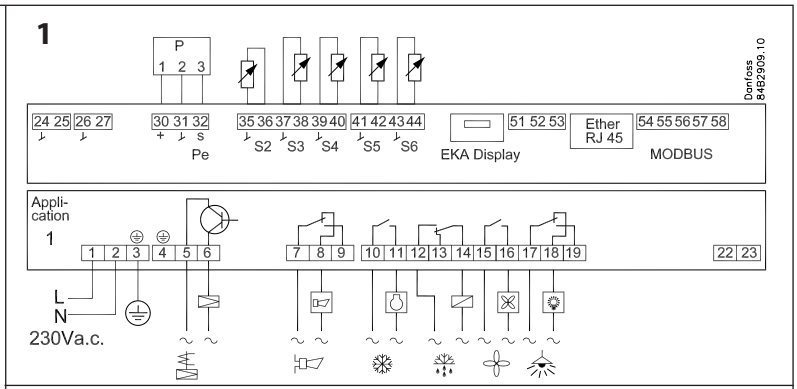

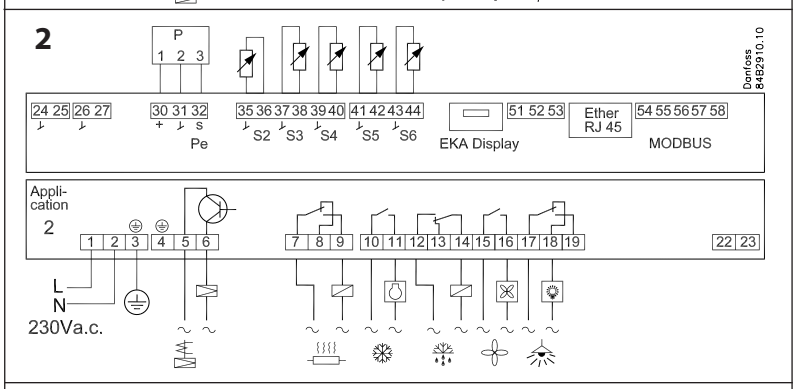

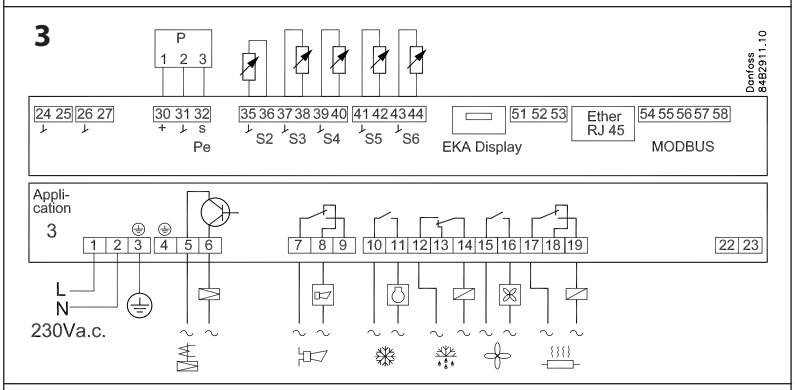

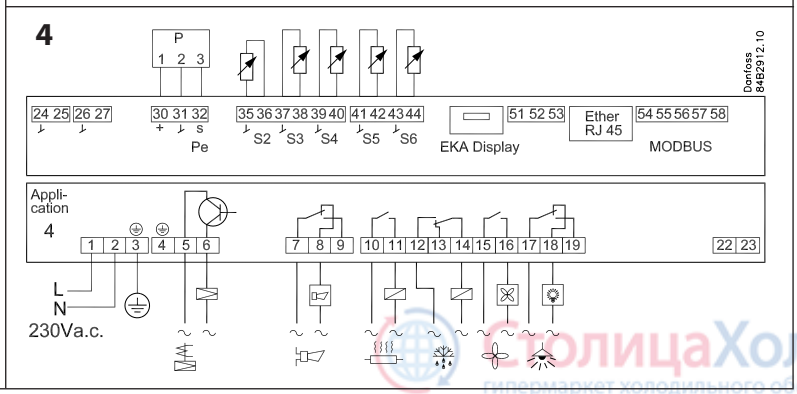

СтолицаХолода
гипермаркет холодильного оборудования
создаем холод сохраняем тепло
www.stolicaholoda.ru

The following uses have some special functions which in brief are:

Application 5
"Two-compressor" operation.
The two compressors must be of the same size. On start-up (after defrosting, operational stop, etc.) both compressors are started with a set time shift. One compressor starts at half the differential so that an optimum adaptation of compressor capacity takes place for the current load in the appliance/room. There is automatic runtime equalisation between the compressors.
For a more detailed description please refer to earlier sections in the manual.

Application 6
Hot gas defrosting.
Hot gas defrosting is adapted to commercial appliances/rooms with limited system filling.
One relay controls the main valve in the suction line.
A changeover relay controls both the hot gas valve and the drain valve.
This means that there is no time delay between stops of hot gas and start of draining.

Application 7
Control of night blinds
Night blinds follow the status of the light function – when the light is switched on, the night blinds are up and when the light is switched off, the night blinds are down. In addition a digital input provides the option of forced opening of the blinds so that the appliance can be filled with products.

Application 8
Heat thermostat
The heat thermostat is typically used if the temperature is to be controlled within narrower limits, e.g. for cutting rooms, etc. The heating thermostat can be set as a difference in relation to the cutout limit for the refrigeration thermostat so that simultaneous refrigeration and heating are avoided.

Application 9
Two refrigeration sections – two defrost outputs
This application is for refrigeration appliances with one valve, two evaporators and two refrigeration sections. The temperature is controlled and is always alarm monitored according to the S4 temperature. For this the product sensor is used as a defrosting stop sensor for evaporator no. 2.

Application 10
Two refrigeration sections – individual alarm/ display via S3
This application is for refrigeration appliances with one valve, one evaporator and two refrigeration sections. The temperature is always controlled according to the S4 temperature. The product sensor is used as an extra S3 sensor for section no. 2. Alarm monitoring and display readings take place individually via the "S3" sensors in each refrigeration section.

5

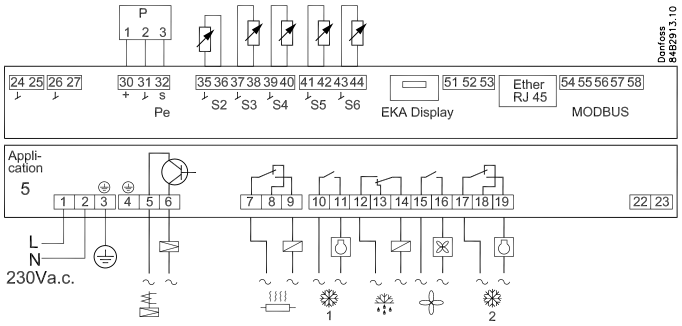

6

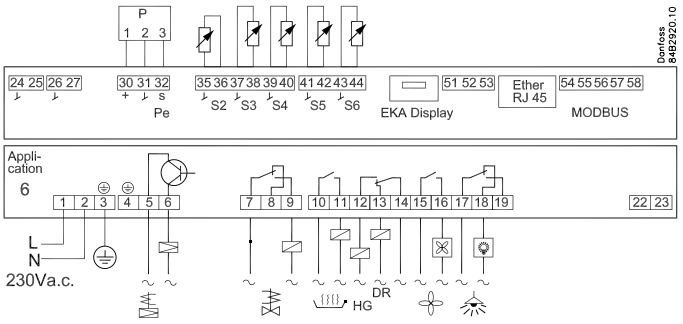

7

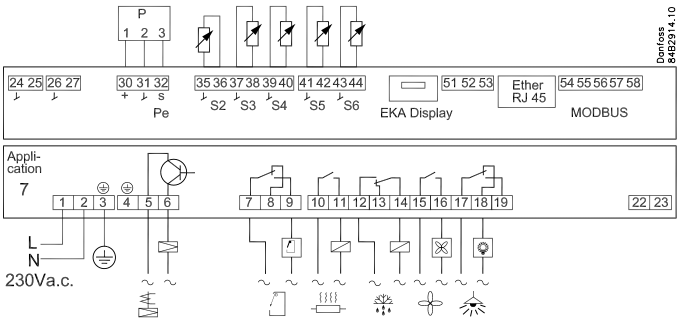

8

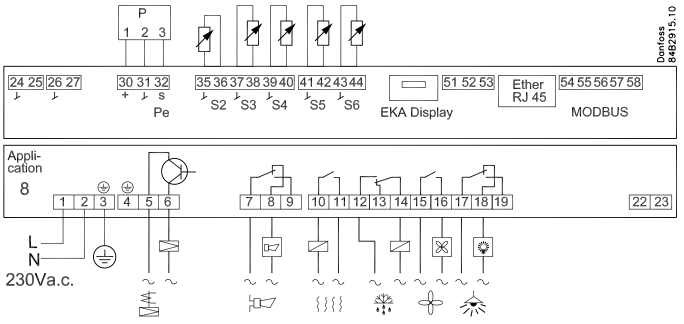

9

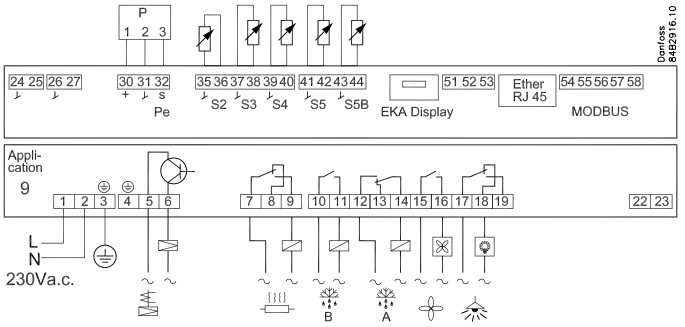

10

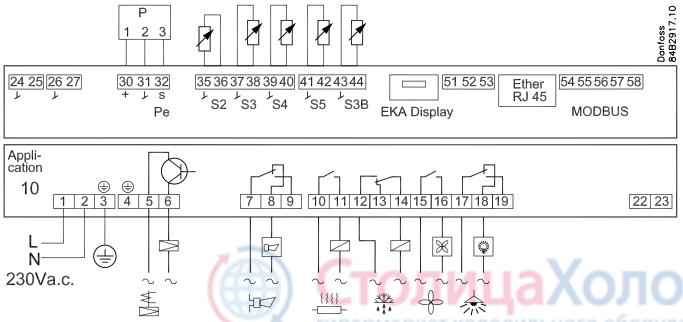

СтолицаХолода
гипермаркет холодильного оборудования
создаем холод сохраняем тепло
www.stolicaholoda.ru

Connection signs

The controller is provided with signs from the factory indicating application 1.
If you employ another use, signs are provided so that you can mount the relevant one. It is only the lower sign that needs to be mounted.

The number is indicated on the left-hand side of the signs. Use the sign with the current application number. One of the signs applies to both applications 4 and 10.

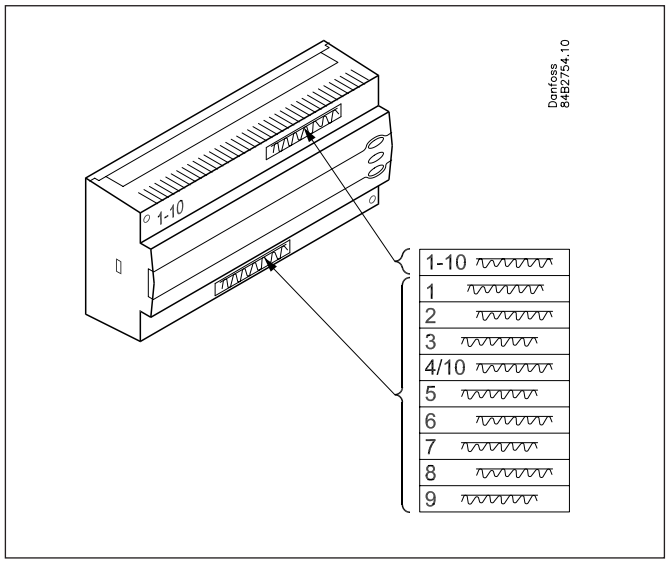

СтолицаХолода
гипермаркет холодильного оборудования
создаем холод сохраняем тепло
www.stolicaholoda.ru

Survey of functions

Function	Para-meter	Parameter by operation via data communication
Normal display		
Normally the temperature value from one of the two thermostat sensors S3 or S4 or a mixture of the two measurements is displayed. In o17 the ratio is determined.		Display air (u56)
Thermostat		**Thermostat control**
Set point Regulation is based on the set value plus a displacement, if applicable. The value is set via a push on the centre button. The set value can be locked or limited to a range with the settings in r02 and r 03. The reference at any time can be seen in "u91 Cutout temp".		Cutout °C
Differential When the temperature is higher than the reference + the set differential, the compressor relay will be cut in. It will cut out again when the temperature comes down to the set reference. 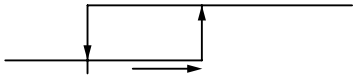 	r01	Differential
Setpoint limitation The controller's setting range for the setpoint may be narrowed down, so that much too high or much too low values are not set accidentally - with resulting damages.		
To avoid a too high setting of the setpoint, the max. allowable reference value may be lowered.	r02	Max cutout °C
To avoid a too low setting of the setpoint, the min. allowable reference value may be increased.	r03	Min cutout °C
Correction of the display's temperature If the temperature at the products and the temperature received by the controller are not identical, an offset adjustment of the display temperature can be carried out.	r04	Disp. Adj. K
Temperature unit Set here if the controller is to show temperature values in °C or in °F.	r05	Temp. unit °C=0. / °F=1 (Only °C on AKM, whatever the setting)
Correction of signal from S4 Compensation possibility due to long sensor cable	r09	Adjust S4
Correction of signal from S3 Compensation possibility due to long sensor cable	r10	Adjust S3
Start / stop of refrigeration With this setting refrigeration can be started, stopped or a manual override of the outputs can be allowed. (For manual control the value is set at -1. Then the AKV outlet and the relay outlets can be force-controlled by the respective reading parameters (u23, u58, etc.). Here the read value can be overwritten.) Start / stop of refrigeration can also be accomplished with the external switch function connected to a DI input. Stopped refrigeration will give a "Standby alarm".	r12	Main Switch 1: Start 0: Stop -1: Manual control of outputs allowed
Night setback value The thermostat's reference will be the setpoint plus this value when the controller changes over to night operation. (Select a negative value if there is to be cold accumulation.)	r13	Night offset
Thermostat function Here it is defined how the thermostat is to operate. Either as an ordinary ON/OFF thermostat or as a modulating thermostat. 1: ON/OFF thermostat 2: Modulating When operation is "modulating" the AKV valve will limit the flow of refrigerant so that the temperature variation will be less than for the ON/OFF thermostat. The differential (r01) must not be set lower than 2K for "modulating". In a decentralised plant you must select the ON/OFF thermostat setting.	r14	Therm. mode
Selection of thermostat sensor Here you define the sensor the thermostat is to use for its control function. S3, S4, or a combination of them. With the setting 0%, only S3 is used (Sin). With 100%, only S4.	r15	Ther. S4 %

СтолицаХолода
гипермаркет холодильного оборудования
создаем холод сохраняем тепло
www.stolicaholoda.ru

Melt function Only for control of refrigeration (-5 to +10°C). The function ensures that the evaporator will not be blocked by frost. Here you set how often the function is to stop the refrigeration and hence transform the frost to water (or ice if there is too much frost).	r16	MeltInterval
Melt period Here you set how long an on-going melt function is to last.	r17	Melt period
Set point 2 The thermostat's cutout value when the thermostat band 2 is activated via a digital input.	r21	Cutout2 temp
Correction of signal from S6 Compensation possibility due to long sensor cable	r59	Adjust S6
Selection of thermostat sensor S4% during night operation with night blinds Here you define the sensor the thermostat is to use for its control function. S3, S4, or a combination of them. With the setting 0%, only S3 is used (Sin). With 100%, only S4.	r61	Ther.S4% Ngt
Heat function Set the size of the Neutral Zone for changeover from cooling to heating	r62	Heat NZ
Time delay on transition from refrigeration phase to heating phase. (there is not time delay on transition from heating phase to refrigeration phase).	r63	HeatStartDel
		Night setbck (start of nightsignal. 0=Day, 1=Night)
		Forced cool. (start of forced cooling)
		Forced close (Forced stop of cooling)
Alarm		**Alarm settings**
The controller can give alarm in different situations. When there is an alarm all the light-emitting diodes (LED) will flash on the controller front panel, and the alarm relay will cut in.		With data communication the importance of the individual alarms can be defined. Setting is carried out in the "Alarm destinations" menu via AKM.
Alarm delay (short alarm delay on air temperature) If the upper or the lower alarm limit values are exceeded, a timer function will commence. The alarm will not become active until the set time delay has been passed. The time delay is set in minutes.	A03	Alarm delay
Time delay for door alarm The time delay is set in minutes. The function is defined in o02 , o37 or in o84.	A04	DoorOpen del
Time delay for cooling (long alarm delay) This time delay is used during start-up, during defrost, immediately after a defrost. There will be change-over to the normal time delay (A03) when the temperature has dropped below the set upper alarm limit. The time delay is set in minutes.	A12	Pulldown del
Upper alarm limit Here you set when the alarm for high temperature is to start. The limit value is set in °C (absolute value). The limit value will be raised during night operation. The value is the same as the one set for night setback, but will only be raised if the value is positive.	A13	HighLim Air
Lower alarm limit Here you set when the alarm for low temperature is to start. The limit value is set in °C (absolute value).	A14	LowLim Air
Upper alarm limit for thermostat 2 (Thermostat band 2) (Same function as for thermostat 1)	A20	HighLim2 Air
Lower alarm limit for thermostat 2 (Thermostat band 2) (Same function as for thermostat 1)	A21	LowLim2 Air
Upper alarm limit for S6 temperature at thermostat 1	A22	HighLim1 S6
Lower alarm limit for S6 temperature at thermostat 1	A23	LowLim1 S6
Upper alarm limit for S6 temperature at thermostat 2 (Thermostat band 2)	A24	HighLim2 S6
Lower alarm limit for S6 temperature at thermostat 2 (Thermostat band 2)	A25	LowLim2 S6
S6 temperature alarm delay The alarm is activated if one of the relevant alarm limits A22, A23, A24 or A25 is exceeded. The time delay is set in minutes. (Alarms will not activate when the setting is set to the maximum value.)	A26	Al. Delay S6
Delay of a DI1 alarm A cut-out/cut-in input will result in alarm when the time delay has been passed. The function is defined in o02.	A27	Al.Delay DI1
Delay of a DI2 alarm A cut-out/cut-in input will result in alarm when the time delay has been passed. The function is defined in o37	A28	Al.Delay DI2

СтолицаХолода
гипермаркет холодильного оборудования
создаем холод сохраняем тепло
www.stolicaholoda.ru

Signal to the alarm thermostat Here you have to define the ratio between the sensors which the alarm thermostat has to use. S3, S4 or a combination of the two. With setting 0% only S3 is used. With 100% only S4 is used	A36	Alarm S4%
Time delay on S6 (product sensor) for pull-down (long alarm delay) This time delay is used for start-up, during defrosting, immediately after a defrost and after an appliance clean. A change is carried out to standard time delay (A26) when the temperature has reached below the set upper alarm limit. The time delay is set in minutes.	A52	PullD del.S6
		Reset alarm
		Ctrl. Error (EKC error)

Compressor		**Compressor control**
The compressor relay works in conjunction with the thermostat. When the thermostat calls for refrigeration the compressor relay be operated.		
Running times To prevent irregular operation, values can be set for the time the compressor is to run once it has been started. And for how long it at least has to be stopped. The running times are not observed when defrosts start.		
Min. ON-time (in minutes)	c01	Min. On time
Min. OFF-time (in minutes)	c02	Min. Off time
Time delay for couplings of two compressors Settings indicate the time that has to elapse from the first relay cuts in and until the next relay has to cut in.	c05	Step delay
The LED on the controller's front will show whether refrigeration is in progress.		Comp Relay Here you can read the status of the compressor relay.
Defrost		**Defrost control**
The controller contains a timer function that is zeroset after each defrost start. The timer function will start a defrost if/when the interval time is passed. The timer function starts when voltage is connected to the controller, but it is displaced the first time by the setting in d05. If there is power failure the timer value will be saved and continue from here when the power returns. This timer function can be used as a simple way of starting defrosts, but it will always act as safety defrost if one of the subsequent defrost starts is not received. The controller also contains a real-time clock. By means of settings of this clock and times for the required defrost times, defrost can be started at fixed times of the day. Defrost start can also be accomplished via data communication, via contact signals or manual start-up. All starting methods will function in the controller. The different functions have to be set, so that multiple defrosts are avoided.. Defrost can be accomplished with electricity, hotgas or brine. The actual defrost will be stopped based on time or temperature with a signal from a temperature sensor.		
Defrost method Here you set whether defrost is to be accomplished with electricity, gas, or (none). During defrost the defrost relay will be cut in.	d01	Def. method 0 = non 1 = El 2 = Gas
Defrost stop temperature The defrost is stopped at a given temperature which is measured with a sensor (the sensor is defined in d10). The temperature value is set.	d02	Def. Stop Temp

СтолицаХолода
гипермаркет холодильного оборудования
создаем холод сохраняем тепло
www.stolicaholoda.ru

Interval between defrost starts The function is zeroset and will start the timer function at each defrost start. When the time has expired the function will start a defrost. The function is used as a simple defrost start, or it may be used as a safeguard if the normal signal fails to appear. If master/slave defrost without clock function or without data communication is used, the interval time will be used as max. time between defrosts. If a defrost start via data communcation does not take place, the interval time will be used as max. time between defrosts. When there is defrost with clock function or data communication, the interval time must be set for a somewhat longer period of time than the planned one, as the interval time will otherwise start a defrost which a little later will be followed by the planned one. In connection with power failure the interval time will be maintained, and when the power returns the interval time will continue from the maintained value. The interval time is not active when set to 0.	d03	Def Interval (0=off)
Max. defrost duration This setting is a safety time so that the defrost will be stopped if there has not already been a stop based on temperature or via coordinated defrost.	d04	Max Def. time
Time staggering for defrost cutins during start-up The function is only relevant if you have several refrigeration appliances or groups where you want the defrost to be staggered in relation to one another. The function is furthermore only relevant if you have chosen defrost with interval start (d03). The function delays the interval time d03 by the set number of minutes, but it only does it once, and this at the very first defrost taking place when voltage is connected to the controller. The function will be active after each and every power failure.	d05	Time Stagg.
Drip-off time Here you set the time that is to elapse from a defrost and until the compressor is to start again. (The time when water drips off the evaporator).	d06	DripOff time

Delay of fan start after defrost Here you set the time that is to elapse from compressor start after a defrost and until the fan may start again. (The time when water is "tied" to the evaporator).	d07	FanStartDel
Fan start temperature The fan may also be started a little earlier than mentioned under "Delay of fan start after defrost", if the defrost sensor S5 registers a lower value than the one set here.	d08	FanStartTemp
Fan cut in during defrost Here you can set whether fan is to operate during defrost. 0: Stopped (Runs during pump down) 1: Running (stopped during "fan delay") 2: Running during pump down and defrost. After that stopped	d09	FanDuringDef
Defrost sensor Here you define the defrost sensor. 0: None, defrost is based on time 1: S5 2: S4 3: Sx. For application 1 to 8 and 10 defrosting is stopped when both S5 and S6 have reached the set temperature. For application 9 defrosting is stopped individually on the two sections of S5 / S5B	d10	DefStopSens.
Pumpdown delay Set the time where the evaporator is emptied of refrigerant prior to the defrost.	d16	Pump dwn del.
Drain delay (only in connection with hotgas) Set the time where the evaporator is emptied of condensed refrigerant after the defrost.	d17	Drain del
Defrost on demand – aggregate refrigeration time Set here is the refrigeration time allowed without defrosts. If the time is passed, a defrost will be started. With setting = 0 the function is cut out.	d18	MaxTherRunT
Delay on stop of heating in the drip tray The time applies from the time the defrost stops by time or temperature to the time the heating element in the drip tray needs to be disconnected.	d20	Drip Tray del
Adaptive defrosting An adaptive defrosting is an extra defrost in addition to the scheduled defrosts or a cancellation of a scheduled defrost. Here the adaptive defrost is set for when it can come into operation if the need arises: 0: Never, 1: Never, but triggers an alarm in the case of icing up 2: Cancellation of day schedule is permitted. Night schedule is carried out 3: Cancellation of day schedule is permitted. Cancellation of night schedule is permitted 4: All schedules are carried out + extra if it is registered that it is required. (Temporary setting to 0 will reset the recorded values.)	d21	AD mode

СтолицаХолода
гипермаркет холодильного оборудования
создаем холод сохраняем тепло
www.stolicaholoda.ru

If you wish to see the temperature at the defrost sensor, push the controller's lowermost button. (May be changed to another function in o92.)		Defrost temp.
If you wish to start an extra defrost, push the controller's lowermost button for four seconds. You can stop an ongoing defrost in the same way		Def Start Here you can start a manual defrost
		Hold After Def Shows ON when the controller is operating with coordinated defrost.
		Disable def. Defrost in progress can be stopped
		Defrost State Status on defrost 1= pump down / defrost
Parameter for cooling function		
Max. value for the superheat reference	n09	Max SH
Min. value for the superheat reference	n10	Min SH
MOP temperature If no MOP function is required, select pos. OFF	n11	MOP temp (A value of 15 corresponds to OFF)
AKV valve's time period in seconds Should only be set to a lower value if it is a decentralised plant and the suction pressure fluctuates a lot and in line with the opening of the AKV valve.	n13	AKV Period
Fan		**Fan control**
Fan stop temperature The function stops the fans in an error situation, so that they will not provide power to the appliance. If the defrost sensor registers a higher temperature than the one set here, the fans will be stopped. There will be re-start at 2 K below the setting. The function is not active during a defrost or start-up after a defrost. With setting +50°C the function is interrupted.	F04	FanStopTemp.
Pulse operation of fan 0: No pulse operation 1: Pulse operation when the thermostat does not call for refrigeration 2: Pulse operation when the thermostat does not call for refrigeration, but only during night operation	F05	FanPulseMode
Pulse operation period for fan Here the overall pulse time is set. The sum of ON-to and OFF time.	F06	Fan cycle
ON time for fan Here the % part of the period the fans are to be in operation is set.	F07	Fan ON %
The LED on the controller's front will indicate whether a defrost is going on.		Fan Relay Here you can read the fan relay status, or force-control the relay in "Manual control" mode.

Real time clock		
When using data communication the clock is automatically adjusted by the system unit. If the controller is without data communication, the clock will have a power reserve of four hours.		(Times cannot be set via data communication. Settings are only relevant when there is no data communication).
Real-time clock You can set up to six individual times for defrost starts for each 24-hour period. There is also a date indication used for registration of temperature measurements.		
Defrost start, hour setting	t01-t06	
Defrost start, minute setting (1 and 11 belong together, etc.) When all t01 to t16 equal 0 the clock will not start defrosts.	t11-t16	
Clock: Hour setting	t07	
Clock: Minute setting	t08	
Clock: Date setting	t45	
Clock: Month setting	t46	
Clock: Year setting	t47	

СтолицаХолода
гипермаркет холодильного оборудования
создаем холод сохраняем тепло
www.stolicaholoda.ru

Miscellaneous		Miscellaneous
Delay of output signal after start-up After start-up or a power failure the controller's functions can be delayed so that overloading of the electricity supply network is avoided. Here you can set the time delay.	o01	DelayOfOutp.
Digital input signal - DI1 The controller has a digital input 1 which can be used for one of the following functions: Off: The input is not used 1) Status display of a contact function 2) Door function. When the input is open it signals that the door is open. The refrigeration and the fans are stopped and light switched on. When the time setting in "A04" is passed, an alarm will be given and refrigeration will be resumed (o89). 3) Door alarm. When the input is open it signals that the door is open. When the time setting in "A04" is passed, there will be alarm. 4) Defrost. The function is started with a pulse signal. The controller will register when the DI input is activated. The controller will then start a defrost cycle. 5) Main switch. Regulation is carried out when the input is short-circuited, and regulation is stopped when the input is put in pos. OFF. 6) Night operation. When the input is short-circuited, there will be regulation for night operation. 7) Thermostat band changeover. Switch to thermostat 2 (r21). 8) Separate alarm function. Alarm will be given when the input is short-circuited. 9) Separate alarm function. Alarm will be given when the input is opened. (For 8 and 9 the time delay is set in A27) 10) Case cleaning. The function is started with a pulse signal. See also description on page 5. 11) Forced refrigeration at hotgas defrost when the input is short-circuited. 12) Night cover	o02	DI 1 Config. Definition takes place with the numerical value shown to the left. (0 = off) DI state (Measurement) The DI input's present status is shown here. ON or OFF.
If the controller is built into a network with data communication, it must have an address, and the master gateway of the data communication must then know this address.		
The address is set between 0 and 240, depending on the system unit and the selected data communication. If the system unit is gateway type AKA 245, the version must be 6.20 or higher.	o03	
The address is sent to the gateway when the menu is set in pos. ON IMPORTANT: Before you set o04, you MUST set o61. Otherwise you will be transmitting incorrect data. (The function is not used when the data communication is MODBUS)	o04	
Access code 1 (Access to all settings) If the settings in the controller are to be protected with an access code you can set a numerical value between 0 and 100. If not, you can cancel the function with setting 0. (99 will always give you access).	o05	Acc. code
Sensor type for S3, S4, S5, S6 Normally a Pt 1000 sensor with great signal accuracy is used. But you can also use a sensor with another signal accuracy. That may either be a PTC sensor (1000 ohm at 25°C) All the mounted sensors S3-S6 must be of the same type.	o06	SensorConfig Pt = 0 PTC = 1
Max. standby time after coordinated defrost When a controller has completed a defrost it will wait for a signal which tells that the refrigeration may be resumed. If this signal fails to appear for one reason or another, the controller will itself start the refrigeration when this standby time has elapsed.	o16	Max HoldTime
Select signal for the display S4% Here you define the signal to be shown by the display. S3, S4, or a combination of the two. With setting 0% only S3 is used. With 100% only S4.	o17	Disp. S4%
Pe. Working range for pressure transmitter - min. value	o20	MinTransPres
Pe. Working range for pressure transmitter - max. value	o21	MaxTransPres
Refrigerant setting (only if "r12" = 0) Before refrigeration is started, the refrigerant must be defined. You may choose between the following refrigerants 1=R12. 2=R22. 3=R134a. 4=R502. 5=R717. 6=R13. 7=R13b1. 8=R23. 9=R500. 10=R503. 11=R114. 12=R142b. 13=Userdefined. 14=R32. 15=R227. 16=R401A. 17=R507. 18=R402A. 19=R404A. 20=R407C. 21=R407A. 22=R407B. 23=R410A. 24=R170. 25=R290. 26=R600. 27=R600a. 28=R744. 29=R1270. 30=R417A. 31=R422A *Warning: Wrong selection of refrigerant may cause damage to the compressor.* Other refrigerants: Here Setting 13 is selected and then three factors -Ref.Fac a1, a2 and a3 - via AKM must be set.	o30	Refrigerant

СтолицаХолода
гипермаркет холодильного оборудования
создаем холод сохраняем тепло
www.stolicaholoda.ru

Digital input signal - D2 The controller has a digital input 2 which can be used for one of the following functions: Off: The input is not used. 1) Status display of a contact function 2) Door function. When the input is open it signals that the door is open. The refrigeration and the fans are stopped. When the time setting in "A04" is passed, an alarm will be given and refrigeration resumed. (o89). 3) Door alarm. When the input is open it signals that the door is open. When the time setting in "A04" is passed an alarm will be given. 4) Defrost. The function is started with a pulse signal. The controller will register when the DI input is activated. The controller will then start a defrost cycle. If the signal is to be received by several controllers it is important that ALL connections are mounted the same way (DI to DI and GND to GND). 5) Main switch. Regulation is carried out when the input is short-circuited, and regulation is stopped when the input is put in pos. OFF. 6) Night operation. When the input is short-circuited, there will be regulation for night operation. 7) Thermostat band changeover. Switch to thermostat 2 (r21) 8) Separate alarm function. Alarm will be given when the input is short-circuited. 9) Separate alarm function. Alarm will be given when the input is opened. 10) Case cleaning. The function is started with a pulse signal. See also description on page 5. 11) Forced refrigeration at hotgas defrost when the input is short-circuited. 12) Night blinds. When the input is short-circuited the night blinds will be activated. 13) The input is used for coordinated defrost in conjunction with other controllers of the same type	o37	DI2 config.
Configuration of light function 1) Light is controlled via day/night status 2) Light is controlled via data communication and "Light remote o39" 3) Light is controlled by door contact, defined in either o02, o37 or o84 where the setting is selected to either 2 or 3. When the door is opened the relay will cut in. When the door is closed again there will be a time delay of two minutes before the light is switched off. 4) As "2" but if there are any 15-minute network errors, the light will switch on and the night blind will open.	o38	Light config
Activation of light relay The light relay can be activated here, but only if defined in o38 with setting 2.	o39	Light remote
Rail heat during day operation The ON period is set as a percentage of the time	o41	Railh.ON day%
Rail heat during night operation The ON period is set as a percentage of the time	o42	Railh.ON ngt%
Rail heat cycle The period of time for the aggregate ON time + OFF time is set in minutes	o43	Railh. cycle
Case cleaning The status of the function can be followed here or the function can be started manually. 0 = Normal operation (no cleaning) 1 = Cleaning with fans operating. All other outputs are Off. 2 = Cleaning with stopped fans. All outputs are Off. If the function is controlled by a signal at the DI1, DI2 or DI3 input, the relevant status can be seen here in the menu.	o46	Case clean
Selection of application The controller can be defined in various ways. Here you set which of the 10 applications is required. On page 12 you can see a survey of applications. *This menu can only be set when regulation is stopped, i.e. "r12" is set to 0.*	o61	Appl. Mode
Transfer a set of pre-settings to the controller An option exists to select quick settings for a number of parameters. This is based on whether an appliance or a room needs to be controlled or whether the defrosting must be stopped by time or by temperature. The overview can be seen on page 27. *This menu can only be set when the control is stopped, i.e. When "r12" is set at 0.* On setting the value will fall back to 0. A subsequent adjustment/setting of parameters can be carried out as required.	o62	-
Access code 2 (Access to adjustments) There is access to adjustments of values, but not to configuration settings. If the settings in the controller are to be protected with an access code you can set a numerical value between 0 and 100. If not, you can cancel the function with setting 0. If the function is used, access code 1 (o05) **must also** be used.	o64	Acc. code 2
Save as factory setting With this setting you save the controller's actual settings as a new basic setting (the earlier factory settings are overwritten).	o67	-

СтолицаХолода
гипермаркет холодильного оборудования
создаем холод сохраняем тепло
www.stolicaholoda.ru

Digital input signal - DI3 (high voltage input) The controller has a digital input 3 which can be used for one of the following functions: Off: The input is not used. 1) Status display of 230 V signal 2) Door function. When the input is 0 V it signals that the door is open. The refrigeration and the fans are stopped. When the time setting in "A04" is passed, an alarm will be given and refrigeration resumed. (o89) 3) Door alarm. When the input is 0 V it signals that the door is open. When the time setting in "A04" is passed an alarm will be given. 4) Defrost. The function is started with a pulse signal. (puls on 230 V) 5) Main switch. Regulation is carried out when the input is 230 V, and regulation is stopped when the input is 0 V. 6) Night operation. When the input is 230 V, there will be regulation for night operation. 7) Thermostat band changeover. Switch to thermostat 2 (r21) 8) Not used. 9) Not used. 10) Case cleaning. The function is started with a pulse signal (pulse on 230 V). See also description on page 5. 11) Forced refrigeration at hotgas defrost when the input is 230 V. 12) Night cover 13) Not used 14) Cooling stopped with the function "Forced closing"	o84	DI3 config.
Rail heat control The rail heat can be controlled in several ways: 0: The function is not used 1: Pulse control is used with a timer function following the day/night operation (o41 and o42) 2: Pulse control is used with a dew point function. This function requires that a signal is received about the dew point value. The value is measured by a system manager and sent to the controller via the data communication.	o85	Railh. mode
Dew point value where the rail heat is minimum This function is discussed earlier in the manual.	o86	DewP Min lim
Dew point value where the rail heat is maximum This function is discussed earlier in the manual.	o87	DewP Max lim
Lowest permitted rail heat effect Here the % part of the effect to be achieved when the dew point value is minimum.	o88	Rail Min ON%
Start of refrigeration when door is open If the door has been left open, refrigeration must be started after a set time. That time can be set here.	o89	DoorInjStart
Fan for "Forced Closing" You can set whether fans should be operational or stopped if the function "Forced closing" is activated here. On "No or 0" the fans are stopped. On "Yes or 1" they will be operational.	o90	Fan ForcedCl
Alternative display A reading can be displayed by pressing the lower button on the controller. This reading is set from the factory so that the defrosting stop temperature is displayed. A different setting will give the following reading: 1: (Defrost stop temperature = factory setting) 2: S6 temperature 3: S5B temperature (Application 9 only)	o92	Displ menu 2
Display of temperature during normal operation 1: Air temperature. Weighted S3 + S4 2: Product temperature S6	o97	Disp. Ctrl.
Light and night blinds definition 0: Light is switched off and night blinds are open when the main switch is off 1: Light and night blinds are independent of main switch.	o98	Light MS = Off
Configuration of alarm relay The alarm relay will be activated upon an alarm signal from the following groups: 1 - High temperature alarms 2 - Low temperature alarms 4 - Sensor error 8 - Digital input enabled for alarm 16 - Defrosting alarms 32 - Miscellaneous 64 - Injection alarms The groups that are to activate the alarm relay must be set by using a numerical value which is the sum of the groups that must be activated. (E.g.: a value of 5 will activate all high temperature alarms and all sensor error.	P41	Al.Rel. Conf.

СтолицаХолода
гипермаркет холодильного оборудования
создаем холод сохраняем тепло
www.stolicaholoda.ru

Service		Service
Temperature measured with S5 sensor	u09	S5 temp.
Status on DI1 input. on/1=closed	u10	DI1 status
Read the duration of the ongoing defrost or the duration of the last completed defrost.	u11	Defrost time
Temperature measured with S3 sensor	u12	S3 air temp
Status at the day-/night operation (night operation: on/off)	u13	Night Cond.
Temperature measured with S4 sensor	u16	S4 air temp
Thermostat temperature	u17	Ther. air
Read the ongoing cutin time for the thermostat or the duration of the last completed cutin	u18	Ther runtime
Read the temperature at the S2 sensor	u20	S2 temp.
Read superheat	u21	Superheat
Read the control's actual superheat reference	u22	SH ref.
Read the valve's actual opening degree	u23	AKV OD %
Read the evaporating pressure	u25	Evap.press Pe
Read the evaporating temperature	u26	Evap.temp Te
Read the temperature at the S6 sensor	u36	S6 temp
Status on DI2 output. on/1=closed	u37	DI2 status
Air temperature. Weighted S3 + S4	u56	Display air
Measured temperature for alarm thermostat	u57	Alarm air
* Status on relay for cooling	u58	Comp1/LLSV
* Status on relay for fan	u59	Fan relay
* Status on relay for defrost	u60	Def. relay
* Status on relay for railheat	u61	Railh. relay
* Status on relay for alarm	u62	Alarm relay
* Status on relay for light	u63	Light relay
* Status on relay for valve in suction line	u64	SuctionValve
* Status on relay for compressor 2	u67	Comp2 relay
* Temperature measured with S5B sensor	u75	S5 temp. B
* Status on relay for hot gas	u80	Hotgas valve
* Status on relay for heating element in drip tray	u81	Drip tray
* Status on relay for night blinds	u82	Blinds relay
* Status on relay for defrost B	u83	Def. relay B
* Status on relay for heat function	u84	Heat relay
* Readout of the actual rail heat effect in %	u85	Rail DutyC %
Readout of which thermostat used for regulation: 1= Thermostat 1, 2= Thermostat 2	u86	Ther. band
Status on input DI3 (on/1 = 230 V)	u87	DI3 status
Readout of the actual cutin value for the thermostat	u90	Cutin temp.
Readout of the actual cut out value for the thermostat	u91	Cutout temp.
Status on function "Adaptive defrost" 0: Off. Function is not activated and is zero set 1: Sensor error S3/S4 are reversed. 2: Tuning is in progress 3: Normal 4: Light build-up of ice 5: Medium build-up of ice 6: Heavy build-up of ice	U01	AD state
Number of defrosts carried out since the initial power up or since the resetting of the function	U10	Acc.defrost
Number of defrosts skipped since the initial power up or since the resetting of the function	U11	Acc.def.skip

*) Not all will be displayed. Only the function belonging to the selection application is displayed.

СтолицаХолода
гипермаркет холодильного оборудования
создаем холод сохраняем тепло
www.stolicaholoda.ru

Operating status		(Measurement)
The controller goes through some regulating situations where it is just waiting for the next point of the regulation. To make these "why is nothing happening" situations visible, you can see an operating status on the display. Push briefly (1s) the upper button. If there is a status code, it will be shown on the display. The individual status codes have the following meanings:		Ctrl. state: (Shown in all menu displays)
Normal regulation	S0	0
Waiting for end of the coordinated defrost	S1	1
When the compressor is operating it must run for at least x minutes.	S2	2
When the compressor is stopped, it must remain stopped for at least x minutes.	S3	3
The evaporator drips off and waits for the time to run out	S4	4
Refrigeration stopped by main switch. Either with r12 or a DI-input	S10	10
Refrigeration stopped by thermostat	S11	11
Defrost sequence. Defrost in progress	S14	14
Defrost sequence. Fan delay — water attaches to the evaporator	S15	15
Refrigeration stopped due to open ON input or stopped regulation	S16	16
Door is open. DI input is open	S17	17
Melt function in progress. Refrigeration is interrupted	S18	18
Modulating thermostat control	S19	19
Emergency cooling due to sensor error	S20	20
Regulation problem in the injections function	S21	21
Start-up phase 2. Evaporator being charged	S22	22
Adaptive control	S23	23
Start-up phase 1. Signal reliability from sensors is controlled	S24	24
Manual control of outputs	S25	25
No refrigerant selected	S26	26
Case cleaning	S29	29
Forced cooling	S30	30
Delay on outputs during start-up	S32	32
Heat function r36 is active	S33	33
Other displays:		
The defrost temperature cannot be displayed. There is stop based on time	non	
Defrost in progress / First cooling after defrost	-d-	
Password required. Set password	PS	
Regulation is stopped via main switch	OFF	

*) Emergency cooling will take effect when there is lack of signal from a defined S3 or S4 sensor. The regulation will continue with a registered average cutin frequency. There are two registered values – one for day operation and one for night operation.

СтолицаХолода
гипермаркет холодильного оборудования
создаем холод сохраняем тепло
www.stolicaholoda.ru

Fault message

In an error situation the LED's on the front will flash and the alarm relay will be activated. If you push the top button in this situation you can see the alarm report in the display.
There are two kinds of error reports - it can either be an alarm occurring during the daily operation, or there may be a defect in the installation.
A-alarms will not become visible until the set time delay has expired.
E-alarms, on the other hand, will become visible the moment the error occurs.
(An A alarm will not be visible as long as there is an active E alarm).
Here are the messages that may appear:

Code / Alarm text via data communication	Description	Alarm relay groups (P41)
A1/--- High t.alarm	High temperature alarm	1
A2/--- Low t. alarm	Low temperature alarm	2
A4/--- Door alarm	Door alarm	8
A5/--- Max hold time	The "o16" function is activated during a coordinated defrost	16
A10/--- Inject prob.	Control problem	64
A11/--- No Rfg. sel.	No refrigerant selected	64
A13/--- High temp S6	Temperature alarm. High S6	1
A14/--- Low temp S6	Temperature alarm. Low S6	2
A15/--- DI1 alarm	DI1 alarm	8
A16/--- DI2 alarm	DI2 alarm	8
A45/--- Standby mode	Standby position (stopped refrigeration via r12 or DI input)	-
A59/--- Case clean	Case cleaning. Signal from DI input	-
--- AD fault	Error in the adaptive defrost function	16
--- AD Iced	Evaporator is iced up. Reduction of air flow	16
--- AD not defr.	Defrost of evaporator is not satisfactory	16
--- AD flashgas	Flash gas is formed at the valve	16
E1/--- Ctrl. error	Faults in the controller	32
E6/--- RTC error	Change battery and check clock	32
E20/--- Pe error	Error on pressure transmitter Pe	64
E24/--- S2 error	Error on S2 sensor	4
E25/--- S3 error	Error on S3 sensor	4
E26/--- S4 error	Error on S4 sensor	4
E27/--- S5 error	Error on S5 sensor	4
E28/--- S6 error	Error on S6 sensor	4
E37/--- S5 error B	Error on S5B sensor	4
---/--- Max Def.Time	Defrost stopped based on time instead of, as wanted, on temperature	16

Data communication
The importance of individual alarms can be defined with a setting. The setting must be carried out in the group "Alarm destinations"

Settings from System manager	Settings from AKM (AKM destination)	Log	Alarm relay			Send via Network
			Non	High	Low-High	
High	1	X		X	X	X
Middle	2	X			X	X
Low	3	X			X	X
Log only		X				
Disabled						

СтолицаХолода
гипермаркет холодильного оборудования
создаем холод сохраняем тепло
www.stolicaholoda.ru

Operation

Display
The values will be shown with three digits, and with a setting you can determine whether the temperature is to be shown in °C or in °F.

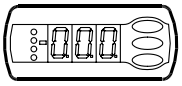

Light-emitting diodes (LED) on front panel
The LED's on the front panel will light up when the relevant relay is activated.
= Refrigeration
= Defrost
= Fan running

The light-emitting diodes will flash when there is an alarm.
In this situation you can download the error code to the display and cancel/sign for the alarm by giving the top button a brief push.

The buttons
When you want to change a setting, the upper and the lower buttons will give you a higher or lower value depending on the button you are pushing. But before you change the value, you must have access to the menu. You obtain this by pushing the upper button for a couple of seconds - you will then enter the column with parameter codes. Find the parameter code you want to change and push the middle buttons until value for the parameter is shown. When you have changed the value, save the new value by once more pushing the middle button.

Examples

Set menu
1. Push the upper button until a parameter r01 is shown
2. Push the upper or the lower button and find that parameter you want to change
3. Push the middle button until the parameter value is shown
4. Push the upper or the lower button and select the new value
5. Push the middle button again to freeze the value.

Cutout alarm relay / receipt alarm/see alarm code
• A short press of the upper button
If there are several alarm codes they are found in a rolling stack. Push the uppermost or lowermost button to scan the rolling stack.

Set temperature
1. Push the middle button until the temperature value is shown
2. Push the upper or the lower button and select the new value
3. Push the middle button again to conclude the setting.

Reading the temperature at defrost sensor (Or product sensor, if selected in o92.)
• A short press of the lower button

Manuel start or stop of a defrost
• Push the lower button for four seconds.

Get a good start

With the following procedure you can start regulation very quickly:

1 Open parameter r12 and stop the regulation (in a new and not previously set unit, r12 will already be set to 0 which means stopped regulation.)

2 Select electrical connection based on the drawings on page 12 and 13

3 Open parameter o61 and set the electric connection number in it

4 Now select one of the preset settings from the table on page 27.

5 Open parameter n57 and select method for measuring of evaporator pressure Pe or S1 (factory setting is Pe pressure transmitter)

6 Select refrigerant via parameter o30

7 Open parameter r12 and start the regulation

8 Go through the survey of factory settings. The values in the grey cells are changed according to your choice of settings. Make any necessary changes in the respective parameters.

9 For network. Set the address in o03

10 Send address to system unit:
• MODBUS: Activate scan function in system unit
• If another data communication card is used in the controller:
- LON RS485: Activate the function o04

СтолицаХолода
гипермаркет холодильного оборудования
создаем холод сохраняем тепло
www.stolicaholoda.ru

Auxiliary schedule for settings (quick-setup)

	Case			Room		
	Defrost stop on time	Defrost stop on S5		Defrost stop on time	Defrost stop on S5	
Preset settings (o62)	**1**	**2**	**3**	**4**	**5**	**6**
Temperature (SP)	2°C	-2°C	-28°C	4°C	0°C	-22°C
Max. temp. setting (r02)	6°C	4°C	-22°C	8°C	5°C	-20°C
Min. temp. setting (r03)	0°C	-4°C	-30°C	0°C	-2°C	-24°C
Sensor signal for thermostat. S4% (r15)	100%			0%		
Alarm limit high (A13)	8°C	6°C	-15°C	10°C	8°C	-15°C
Alarm limit low (A14)	-5°C	-5°C	-30°C	0°C	0°C	-30°C
Sensor signal for alarm funct.S4% (A36)	0%		100%	0%		
Interval between defrost (d03)	6 h	6h	12h	8h	8h	6h
Defrost sensor: 0=time, 1=S5, 2=S4 (d10)	0	1	1	0	1	1
DI1 config. (o02)	Case cleaning (=10)			Door function (=2)		
Sensor signal for display view S4% (017)	0%					

Note: For applications 9 and 10 the sensor weighting for the S3/S4 sensors is not used for the thermostat, alarm thermostat and display readings as the sensor uses are predefined.

СтолицаХолода
гипермаркет холодильного оборудования
создаем холод сохраняем тепло
www.stolicaholoda.ru

Menu survey

SW = 1.2x

Parameter			EL-diagram page 12 or 13													
Function		Code	1	2	3	4	5	6	7	8	9	10	**Min.-value**	**Max.-value**	**Factory setting**	**Actual setting**
Normal operation																
Temperature (setpoint)		- - -	1	1	1	1	1	1	1	1	1	1	-50°C	50°C	2	
Thermostat																
Differential		r01	1	1	1	1	1	1	1	1	1	1	0.1 K	20 K	2	
Max. limitation of setpoint setting		r02	1	1	1	1	1	1	1	1	1	1	-49°C	50°C	50	
Min. limitation of setpoint setting		r03	1	1	1	1	1	1	1	1	1	1	-50°C	49°C	-50	
Adjustment of temperature indication		r04	1	1	1	1	1	1	1	1	1	1	-10	10	0	
Temperature unit (°C/°F)		r05	1	1	1	1	1	1	1	1	1	1	0/°C	1/F	0/°C	
Correction of the signal from S4		r09	1	1	1	1	1	1	1	1	1	1	-10 K	10 K	0	
Correction of the signal from S3		r10	1	1	1	1	1	1	1	1	1	1	-10 K	10 K	0	
Manual service, stop regulation, start regulation (-1, 0, 1)		r12	1	1	1	1	1	1	1	1	1	1	-1	1	0	
Displacement of reference during night operation		r13	1	1	1	1	1	1	1	1	1	1	-50 K	50 K	0	
Define thermostat function 1=ON/OFF, 2=Modulating		r14	1	1	1	1	1	1	1	1	1	1	1	2	1	
Definition and weighting, if applicable, of thermostat sensors - S4% (100%=S4, 0%=S3)		r15	1	1	1	1	1	1	1	1			0 %	100 %	100	
Time between melt periods		r16	1	1	1	1	1	1	1	1	1	1	0 hrs	10 hrs	1	
Duration of melt periods		r17	1	1	1	1	1	1	1	1	1	1	0 min.	30 min.	5	
Temperature setting for thermostat band 2 . As differential use r01		r21	1	1	1	1	1	1	1	1	1	1	-50°C	50°C	2	
Correction of the signal from S6		r59	1	1	1	1	1	1	1	1		1	-10 K	10 K	0	
Definition and weighting, if applicable, of thermostat sensors when night cover is on. (100%=S4, 0%=S3)		r61							1				0 %	100 %	100	
Heat function Neutral zone between refrigeration and heat function		r62								1			0 K	50 K	2	
Time delay at switch between refrigeration and heat function		r63								1			0 min.	240 min.	0	
Alarms																
Delay for temperature alarm		A03	1	1	1	1	1	1	1	1	1	1	0 min.	240 min.	30	
Delay for door alarm		A04	1	1	1	1	1	1	1	1	1	1	0 min.	240 min.	60	
Delay for temperature alarm after defrost		A12	1	1	1	1	1	1	1	1	1	1	0 min.	240 min.	90	
High alarm limit for thermostat 1		A13	1	1	1	1	1	1	1	1	1	1	-50°C	50°C	8	
Low alarm limit for thermostat 1		A14	1	1	1	1	1	1	1	1	1	1	-50°C	50°C	-30	
High alarm limit for thermostat 2		A20	1	1	1	1	1	1	1	1	1	1	-50°C	50°C	8	
Low alarm limit for thermostat 2		A21	1	1	1	1	1	1	1	1	1	1	-50°C	50°C	-30	
High alarm limit for sensor S6 at thermostat 1		A22	1	1	1	1	1	1	1	1		1	-50°C	50°C	8	
Low alarm limit for sensor S6 at thermostat 1		A23	1	1	1	1	1	1	1	1		1	-50°C	50°C	-30	
High alarm limit for sensor S6 at thermostat 2		A24	1	1	1	1	1	1	1	1		1	-50°C	50°C	8	
Low alarm limit for sensor S6 at thermostat 2		A25	1	1	1	1	1	1	1	1		1	-50°C	50°C	-30	
S6 alarm time delay With setting = 240 the S6 alarm will be omitted		A26	1	1	1	1	1	1	1	1		1	0 min.	240 min.	240	
Alarm time delay or signal on the DI1 input		A27	1	1	1	1	1	1	1	1	1	1	0 min.	240 min.	30	
Alarm time delay or signal on the DI2 input		A28	1	1	1	1	1	1	1	1	1	1	0 min.	240 min.	30	
Signal for alarm thermostat. S4% (100%=S4, 0%=S3)		A36	1	1	1	1	1	1	1	1			0 %	100 %	100	
Delay for S6 (product sensor alarm) after defrost		A52	1	1	1	1	1	1	1	1		1	0 min.	240 min.	90	
Compressor																
Min. ON-time		c01	1	1	1		1						0 min.	30 min.	0	
Min. OFF-time		c02	1	1	1		1						0 min.	30 min.	0	
Time delay for cutin of comp.2		c05					1						0 sec	999 sec	5	
Defrost																
Defrost method: 0=none, 1= EL, 2= Gas		d01	1	1	1	1	1	1	1	1	1	1	0/No	2/GAs	1/EL	
Defrost stop temperature		d02	1	1	1	1	1	1	1	1	1	1	0°C	50°C	6	
Interval between defrost starts		d03	1	1	1	1	1	1	1	1	1	1	0 hrs/Off	240 hrs	8	
Max. defrost duration		d04	1	1	1	1	1	1	1	1	1	1	0 min.	360 min.	45	
Displacement of time on cutin of defrost at start-up		d05	1	1	1	1	1	1	1	1	1	1	0 min.	240 min.	0	
Drip off time		d06	1	1	1	1	1	1	1	1	1	1	0 min.	60 min.	0	
Delay for fan start after defrost		d07	1	1	1	1	1	1	1	1	1	1	0 min.	60 min.	0	
Fan start temperature		d08	1	1	1	1	1	1	1	1	1	1	-50 °C	0 °C	-5	

СтолицаХолода
гипермаркет холодильного оборудования
создаем холод сохраняем тепло
www.stolicaholoda.ru

Continued		Code	1	2	3	4	5	6	7	8	9	10	Min.	Max.	Fac.	Actual
Fan cutin during defrost 0: Stopped 1: Running 2: Running during pump down and defrost		d09	1	1	1	1	1	1	1	1	1	1	0	2	1	
Defrost sensor: 0 =Stop on time, 1=S5, 2=S4, 3=Sx (Application 1-8 and 10: both S5 and S6. Application 9: S5 and S5B)		d10	1	1	1	1	1	1	1	1	1	1	0	3	0	
Pump down delay		d16	1	1	1	1	1	1	1	1	1	1	0 min.	60 min.	0	
Drain delay (used at hot gas defrost only)		d17						1					0 min.	60 min.	0	
Max. aggregate refrigeration time between two defrosts		d18	1	1	1	1	1	1	1	1	1	1	0 hrs	48 hrs	0/OFF	
Heat in drip tray. Time from defrosting stops to heating in the drip tray is switched off		d20						1					0 min.	240 min.	30	
Adaptive defrost: 0=not active, 1=monitoring only, 2=skip allowed day, 3=skip allowed both day and night, 4=own assessment + all schedules		d21	1	1	1	1	1	1	1	1	1	1	0	4	0	
Injection control function																
Max. value of superheat reference		n09	1	1	1	1	1	1	1	1	1	1	2°C	20°C	12	
Min. value of superheat reference		n10	1	1	1	1	1	1	1	1	1	1	2°C	20°C	3	
MOP temperature. Off if MOP temp. = 15.0 °C		n11	1	1	1	1	1	1	1	1	1	1	-50°C	15°C	15	
Period time of AKV pulsation Only for trained personnel		n13	1	1	1	1	1	1	1	1	1	1	3 sec	6 sec	6	
Fan																
Fan stop temperature (S5)		F04	1	1	1	1	1	1	1	1	1	1	-50°C	50°C	50	
Pulse operation on fans: 0=No pulse operation, 1=At thermostat cuts out only, 2= Only at thermostat cut outs during night operation		F05	1	1	1	1	1	1	1	1	1	1	0	2	0	
Period time for fan pulsation (on-time + off-time)		F06	1	1	1	1	1	1	1	1	1	1	1 min.	30 min.	5	
On-time in % of period time		F07	1	1	1	1	1	1	1	1	1	1	0 %	100 %	100	
Real time clock																
Six start times for defrost. Setting of hours. 0=OFF		t01 - t06	1	1	1	1	1	1	1	1	1	1	0 hrs	23 hrs	0	
Six start times for defrost. Setting of minutes. 0=OFF		t11 - t16	1	1	1	1	1	1	1	1	1	1	0 min.	59 min.	0	
Clock - Setting of hours		t07	1	1	1	1	1	1	1	1	1	1	0 hrs	23 hrs	0	
Clock - Setting of minute		t08	1	1	1	1	1	1	1	1	1	1	0 min.	59 min.	0	
Clock - Setting of date		t45	1	1	1	1	1	1	1	1	1	1	1 day	31 day	1	
Clock - Setting of month		t46	1	1	1	1	1	1	1	1	1	1	1 mon.	12 mon.	1	
Clock - Setting of year		t47	1	1	1	1	1	1	1	1	1	1	0 year	99 year	0	
Miscellaneous																
Delay of output signals after start-up		o01	1	1	1	1	1	1	1	1	1	1	0 sec	600 sec	5	
Input signal on DI1. Function: 0=not used. 1=status on DI1. 2=door function with alarm when open. 3=door alarm when open. 4=defrost start (pulse-signal). 5=ext.main switch. 6=night operation 7=thermostat band changeover (activate r21). 8=alarm function when closed. 9=alarm function when open. 10=case cleaning (pulse signal). 11=forced cooling at hot gas defrost, 12=night cover		o02	1	1	1	1	1	1	1	1	1	1	0	12	0	
Network address		o03	1	1	1	1	1	1	1	1	1	1	0	240	0	
On/Off switch (Service Pin message) IMPORTANT! o61 **must** be set prior to o04 (used at LON 485 only)		o04	1	1	1	1	1	1	1	1	1	1	0/Off	1/On	0/Off	
Access code 1 (all settings)		o05	1	1	1	1	1	1	1	1	1	1	0	100	0	
Used sensor type : 0=Pt1000, 1=Ptc1000,		o06	1	1	1	1	1	1	1	1	1	1	0/Pt	1/Ptc	0/Pt	
Max hold time after coordinated defrost		o16	1	1	1	1	1	1	1	1	1	1	0 min.	360 min.	20	
Select signal for display view. S4% (100%=S4, 0%=S3)		o17	1	1	1	1	1	1	1	1			0 %	100 %	100	
Pressure transmitter working range – min. value		o20	1	1	1	1	1	1	1	1	1	1	-1 bar	5 bar	-1	
Pressure transmitter working range – max. value		o21	1	1	1	1	1	1	1	1	1	1	6 bar	200 bar	12	
Refrigerant setting: 1=R12. 2=R22. 3=R134a. 4=R502. 5=R717. 6=R13. 7=R13b1. 8=R23. 9=R500. 10=R503. 11=R114. 12=R142b. 13=User defined. 14=R32. 15=R227. 16=R401A. 17=R507. 18=R402A. 19=R404A. 20=R407C. 21=R407A. 22=R407B. 23=R410A. 24=R170. 25=R290. 26=R600. 27=R600a. 28=R744. 29=R1270. 30=R417A. 31=R422A.		o30	1	1	1	1	1	1	1	1	1	1	0	31	0	

СтолицаХолода
гипермаркет холодильного оборудования
создаем холод сохраняем тепло
www.stolicaholoda.ru

Continued		Code	1	2	3	4	5	6	7	8	9	10	Min.	Max.	Fac.	Actual
Input signal on DI2. Function: (0=not used. 1=status on DI2. 2=door function with alarm when open. 3=door alarm when open. 4=defrost start (pulse-signal). 5=ext. main switch 6=night operation 7=thermostat band changeover (activate r21). 8=alarm function when closed. 9=alarm function when open. 10=case cleaning (pulse signal). 11=forced cooling at hot gas defrost.). 12=night cover, 13=coordinated defrost)		o37	1	1	1	1	1	1	1	1	1	1	0	13	0	
Configuration of light function: 1=Light follows day /night operation, 2=Light control via data communication via 'o39', 3=Light control with a DI-input, 4=As "2", but light switch on and night cover will open if the network cut out for more than 15 minutes.		o38	1	1		1		1	1	1	1	1	1	4	1	
Activation of light relay (only if o38=2) On=light		o39	1	1		1		1	1	1	1	1	0/Off	1/On	0/Off	
Rail heat On time during day operations		o41		1	1	1	1		1		1	1	0 %	100 %	100	
Rail heat On time during night operations		o42		1	1	1	1		1		1	1	0 %	100 %	100	
Rail heat period time (On time + Off time)		o43		1	1	1	1		1		1	1	6 min.	60 min.	10	
Case cleaning. 0=no case cleaning. 1=Fans only. 2=All output Off.	***	o46	1	1	1	1	1	1	1	1	1	1	0	2	0	
Selection of EL diagram. See overview page 12 and 13	*	o61	1	1	1	1	1	1	1	1	1	1	1	10	1	
Download a set of predetermined settings. See overview page 27.	*	o62	1	1	1	1	1	1	1	1	1	1	0	6	0	
Access code 2 (partial access)	***	o64	1	1	1	1	1	1	1	1	1	1	0	100	0	
Replace the controllers factory settings with the present settings		o67	1	1	1	1	1	1	1	1	1	1	0/Off	1/On	0/Off	
Input signal on DI3. Function: (high voltage input) (0=not used. 1=status on DI2. 2=door function with alarm when open. 3=door alarm when open. 4=defrost start (pulse-signal). 5=ext. main switch 6=night operation, 7=thermostat band changeover (activate r21). 8=Not used. 9=Not used. 10=case cleaning (pulse signal). 11=forced cooling at hot gas defrost, 12=night cover. 13=Not used. 14=Refrigeration stopped (forced closing))		o84	1	1	1	1	1	1	1	1	1	1	0	14	0	
Rail heat control 0=not used, 1=pulse control with timer function (o41 and o42), 2=pulse control with dew point function		o85		1	1	1	1		1		1	1	0	2	0	
Dew point value where the rail heat is minimum		o86		1	1	1	1		1		1	1	-10°C	50°C	8	
Dew point value where the rail heat is 100% on		o87		1	1	1	1		1		1	1	-9°C	50°C	17	
Lowest permitted rail heat effect in %		o88		1	1	1	1		1		1	1	0 %	100 %	30	
Time delay from "open door" refrigeration is started		o89	1	1	1	1	1	1	1	1	1	1	0 min.	240 min.	30	
Fan operation on stopped refrigeration (forced closing): no/0=Fan Off, yes/1=Fan On		o90	1	1	1	1	1	1	1	1	1	1	0/no	1/yes	1/yes	
Definition of readings on lower button: 1=defrost stop temperature, 2=S6 temperature, 3=S5_B temperature		o92	1	1	1	1	1	1	1	1	1	1	1	3	1	
Display of temperature 1= u56 Air temperature 2= u36 product temperature		o97	1	1	1	1	1	1	1	1	1	1	1	2	1	
Light and night blinds defined 0: Light is switch off and night blind is open when the main switch is off 1: Light and night blind is independent of main switch		o98	1	1	1	1	1	1	1	1	1	1	0	1	0	
Configuration of alarm relay The alarm relay will be activated upon an alarm signal from the following groups: 1 - High temperature alarms 2 - Low temperature alarms 4 - Sensor error 8 - Digital input enabled for alarm 16 - Defrosting alarms 32 - Miscellaneous 64 - Injection alarms The groups that are to activate the alarm relay must be set by using a numerical value which is the sum of the groups that must be activated. (E.g.: a value of 5 will activate all high temperature alarms and all sensor error.		P41	1		1	1				1		1	0	127	111	

СтолицаХолода
гипермаркет холодильного оборудования
создаем холод сохраняем тепло
www.stolicaholoda.ru

Continued		Code	1	2	3	4	5	6	7	8	9	10	Min.	Max.	Fac.	Actual
Service																
Temperature measured with S5 sensor		u09	1	1	1	1	1	1	1	1	1	1				
Status on DI1 input. on/1=closed		u10	1	1	1	1	1	1	1	1	1	1				
Actual defrost time (minutes)		u11	1	1	1	1	1	1	1	1	1	1				
Temperature measured with S3 sensor		u12	1	1	1	1	1	1	1	1	1	1				
Status on night operation (on or off) 1=on		u13	1	1	1	1	1	1	1	1	1	1				
Temperature measured with S4 sensor		u16	1	1	1	1	1	1	1	1	1	1				
Thermostat temperature		u17	1	1	1	1	1	1	1	1	1	1				
Run time of thermostat (cooling time) in minutes		u18	1	1	1	1	1	1	1	1	1	1				
Temperature of evaporator outlet temp.		u20	1	1	1	1	1	1	1	1	1	1				
Superheat across evaporator		u21	1	1	1	1	1	1	1	1	1	1				
Reference of superheat control		u22	1	1	1	1	1	1	1	1	1	1				
Opening degree of AKV valve	**	u23	1	1	1	1	1	1	1	1	1	1				
Evaporating pressure Po (relative)		u25	1	1	1	1	1	1	1	1	1	1				
Evaporator temperature To (Calculated)		u26	1	1	1	1	1	1	1	1	1	1				
Temperature measured with S6 sensor (product temperature)		u36	1	1	1	1	1	1	1	1		1				
Status on DI2 output. on/1=closed		u37	1	1	1	1	1	1	1	1	1	1				
Air temperature . Weighted S3 and S4		u56	1	1	1	1	1	1	1	1	1	1				
Measured temperature for alarm thermostat		u57	1	1	1	1	1	1	1	1	1	1				
Status on relay for cooling	**	u58	1	1	1		1									
Status on relay for fan	**	u59	1	1	1	1	1	1	1	1	1	1				
Status on relay for defrost	**	u60	1	1	1	1	1		1	1	1	1				
Status on relay for railheat	**	u61		1	1	1	1		1		1	1				
Status on relay for alarm	**	u62	1		1	1				1		1				
Status on relay for light	**	u63	1	1		1		1	1	1	1	1				
Status on relay for valve in suction line	**	u64						1								
Status on relay for compressor 2	**	u67					1									
Temperature measured with S5B sensor		u75									1					
Status on relay for hot gas- / drain valve	**	u80						1								
Status on relay for heating element in drip tray	**	u81						1								
Status on relay for night blinds	**	u82							1							
Status on relay for defrost B	**	u83									1					
Status on relay for heat function	**	u84								1						
Readout of the actual rail heat effect		u85		1	1	1	1		1		1	1				
1: Thermostat 1 operating, 2: Thermostat 2 operating		u86	1	1	1	1	1	1	1	1	1	1				
Status on high voltage input DI3		u87	1	1	1	1	1	1	1	1	1	1				
Readout of thermostats actual cut in value		u90	1	1	1	1	1	1	1	1	1	1				
Readout of thermostats actual cut out value		u91	1	1	1	1	1	1	1	1	1	1				
Readout of status on the adaptive defrost 0: Off. Function is not activated and are zero set 1: Sensor error or S3/S4 are reversed. 2: Tuning is in progress 3: Normal 4: Light build-up of ice 5: Medium build-up of ice 6: Heavy build-up of ice		U01	1	1	1	1	1	1	1	1	1	1				
Number of defrosts carried out since the initial power up or since the resetting of the function		U10	1	1	1	1	1	1	1	1	1	1				
Number of defrosts skipped since the initial power up or since the resetting of the function		U11	1	1	1	1	1	1	1	1	1	1				

*) Can only be set when regulation is stopped (r12=0)
**) Can be controlled manually, but only when r12=-1
***) With access code 2 the access to these menus will be limited

СтолицаХолода
гипермаркет холодильного оборудования
создаем холод сохраняем тепло
www.stolicaholoda.ru

Connections

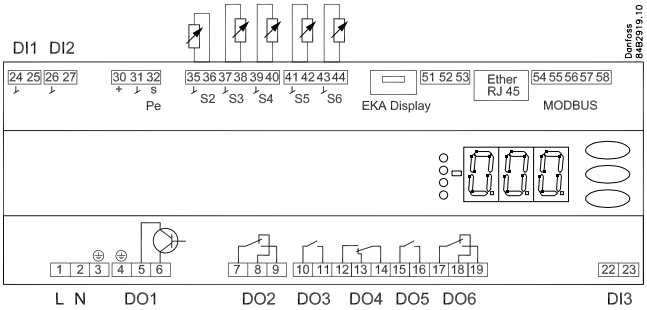

Version where sensor connections have plug connections.

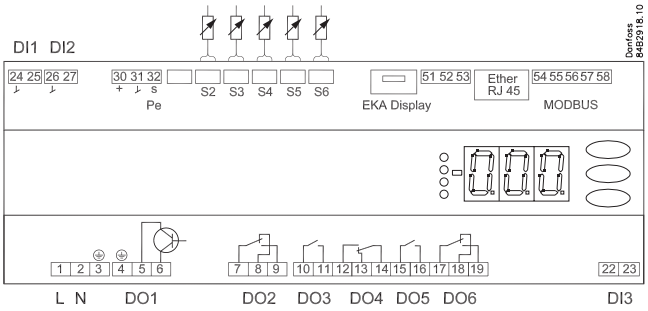

Overview of outputs and applications.

See also electrical diagrams earlier in the manual

Application	DO1	DO2	DO3	DO4	DO5	DO6	DI1	DI2	DI3	AI1	AI2	AI3	AI4	AI5	AI6
1							●	●	●	P0	S2	S3	S4	S5	S6
2							●	●	●	P0	S2	S3	S4	S5	S6
3							●	●	●	P0	S2	S3	S4	S5	S6
4							●	●	●	P0	S2	S3	S4	S5	S6
5			1			2	●	●	●	P0	S2	S3	S4	S5	S6
6		suction		hotgas			●	●	●	P0	S2	S3	S4	S5	S6
7		Blinds					●	●	●	P0	S2	S3	S4	S5	S6
8			heat				●	●	●	P0	S2	S3	S4	S5	S6
9			2	1			●	●	●	P0	S2	S3	S4	S5	S5B
10							●	●	●	P0	S2	S3	S4	S5	S3B

DI1
Digital input signal.
The defined function is active when the input is short-circuited/ opened. The function is defined in o02.

DI2
Digital input signal.
The defined function is active when the input is short-circuited/ opened. The function is defined in o37.

Pressure transmitter
AKS 32R
Connect to terminal 30, 31 and 32.
The signal from one pressure transmitter can be received by up to 10 controllers. But only if there are no significant pressure decreases between the evaporators to be controlled.

S2
Pt 1000 ohm sensor

S3, S4, S5, S6
Pt 1000 ohm sensor or PTC 1000 ohm sensor. All have to be of the same type.
S3, air sensor, placed in the warm air before the evaporator
S4, air sensor, placed in the cold air after the evaporator
(the need for either S3 or S4 can be deselected in the configuration)
S5, defrost sensor, placed on the evaporator
S6, product sensor or defrost sensor B or air sensor B.
The configuration determines which.

EKA Display
If there is be external reading/operation of the controller, display type EKA 163B or EKA 164B can be connected.

RS485 (terminal 51, 52, 53)
For data communication, but only if a data communication module is inserted in the controller. The module can be a LON RS485 or a MODBUS.
Terminal 51 = screen
Terminal 52 = A (A+)
Terminal 53 = B (B-)
(For LON RS485 and gateway type AKA 245 the gateway must be version 6.20 or higher.)

RJ45
For data communication, but only if a TCP/IP module is inserted in the controller. (OEM specific)

MODBUS
For data communication.
Terminal 56 = screen
Terminal 57 = A+
Terminal 58 = B-
(Alternatively the terminals can be connected to an external display type EKA 163A or 164A, but then they cannot be used for data communication. Any data communication must then be carried out by one of the other methods.)

Supply voltage
230 V a.c.

DO1
Connection of expansion valve type AKV or AKVA. The coil must be a **230 V a.c. coil.**

СтолицаХолода
гипермаркет холодильного оборудования
создаем холод сохраняем тепло
www.stolicaholoda.ru

DO2
Alarm
There is a connection between terminal 7 and 8 in alarm situations and when the controller is without power.
Rail heat and heating element in drip tray
There is connection between terminal 7 and 9 when heating takes place.
Night blind
There is connection between terminal 7 and 9 when the night blind is up.
Suction line valve
There is connection between terminal 7 and 9 when the suction line must be open.

DO3
Refrigeration, Rail heat, Heat function, Defrost 2
There is connection between terminal 10 and 11 when the function must be active.
Heating element in drip tray
There is connection between terminal 10 and 11 when heating takes place.

DO4
Defrost
There is connection between terminal 12 and 14 when defrosting takes place.
Hot gas / drain valve
There is connection between terminal 13 and 14 during normal operation.
There is connection between terminal 12 and 14 when the hot gas valves must open.

DO5
Fan
There is connection between terminal 15 and 16 when the fan is on.

DO6
Light relay
There is connection between terminal 17 and 18 when the light must be on.
Rail heat, Compressor 2
There is connection between terminal 17 and 19 when the function must be active.

DI3
Digital input signal.
The signal must have a voltage of 0 / 230 V AC.
The function is defined in o84.

Data communication
If data communication is used, it is important that the installation of the data communication cable is performed correctly.
See separate literature No. RC8AC…

Electric noise
Cables for sensors, DI inputs and data communication **must** be kept separate from other electric cables:
- Use separate cable trays
- Keep a distance between cables of at least 10 cm
- Long cables at the DI input should be avoided

Installation considerations
Accidental damage, poor installation, or site conditions, can give rise to malfunctions of the control system, and ultimately lead to a plant breakdown.
Every possible safeguard is incorporated into our products to prevent this. However, a wrong installation, for example, could still present problems. Electronic controls are no substitute for normal, good engineering practice.
Danfoss will not be responsible for any goods, or plant components, damaged as a result of the above defects. It is the installer's responsibility to check the installation thoroughly, and to fit the necessary safety devices.
Special reference is made to the necessity of signals to the controller when the compressor is stopped and to the need of liquid receivers before the compressors.
Your local Danfoss agent will be pleased to assist with further advice, etc.

Coordinated defrost via cable connections

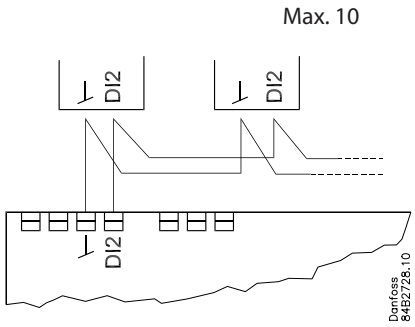

The following controllers can be connected up in this way:
EKC 204A, AK-CC 210, AK-CC 250, AK-CC 450, AK-CC 550A,

Refrigeration is resumed when all controllers have "released" the signal for defrost.

Coordinated defrost via data communication

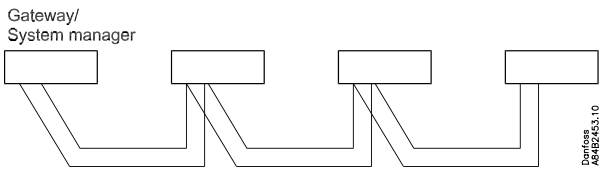

The setting of controllers to coordinate their defrosting takes place in the gateway/system manager.

Refrigeration is resumed when all controllers have "released" the signal for defrost.

СтолицаХолода
гипермаркет холодильного оборудования
создаем холод сохраняем тепло
www.stolicaholoda.ru

Data

Supply voltage	230 V a.c. +10/-15 %. 5 VA, 50/60 Hz		
Sensor S2	Pt 1000		
Sensor S3, S4, S5, S6	Pt 1000 or PTC 1000 ohm / 25°C (All 4 must be of the same type)		
Accuracy	Measuring range	-60 to +120°C	
	Controller	±1 K below -35°C ±0.5 K between -35 to +25°C ±1 K above +25°C	
	Pt 1000 sensor	±0.3 K at 0°C ±0.005 K per grad	
Measuring of Pe	Pressure transmitter	AKS 32R	
Display	LED, 3-digits		
External display	EKA 163B or 164B. (any EKA 163A or 164A)		
Digital inputs DI1, DI2	Signal from contact functions Requirements to contacts: Gold plating Cable length must be max. 15 m Use auxiliary relays when the cable is longer		
Digital input DI3	230 V a.c.		
Electrical connection cable	Max.1.5 mm² multi-core cable		
Solid state output	DO1 (for AKV coil)	Max. 240 V a.c. , Min. 28 V a.c. Max. 0.5 A Leak < 1 mA Max. 1 pcs. AKV	
Relays*		CE (250 V a.c.)	
	DO3, DO4	4 (3) A	
	DO2, DO5, DO6	4 (3) A	
Environments	0 to +55°C, During operations -40 to +70°C, During transport		
	20 - 80% Rh, not condensed		
	No shock influence / vibrations		
Density	IP 20		
Mounting	DIN-rail or wall		
Weight	0.4 Kg		
Data communication	Fixed		MODBUS
	Extension options		LON RS485
			TCP/IP
			MODBUS
			DANBUSS
	The controller cannot be hooked up with a monitoring unit type m2.		
Power reserve for the clock	4 hours		
Approvals	EU Low Voltage Directive and EMC demands re CE-marking complied with LVD tested acc. EN 60730-1 and EN 60730-2-9, A1, A2 EMC tested acc. EN50082-1 and EN 60730-2-9, A2		

* DO3 and DO4 are 16 A relays. DO2, DO5 and DO6 are 8 A relays. Max. load must be observed.

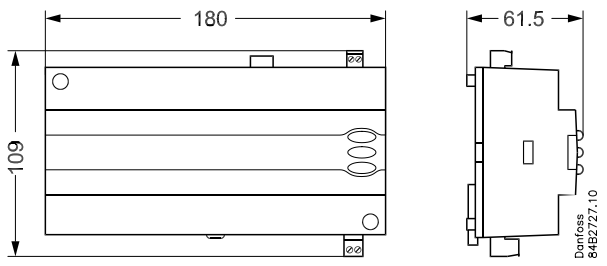

AKV info !!

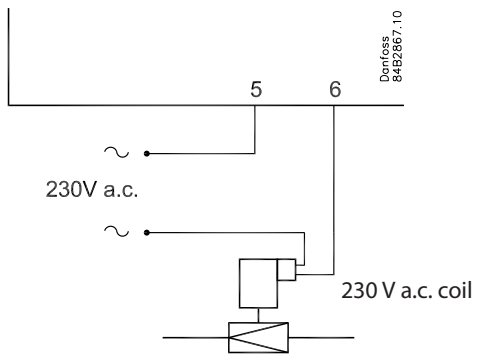

СтолицаХолода
гипермаркет холодильного оборудования
создаем холод
сохраняем тепло
www.stolicaholoda.ru

Ordering

Type		Function	Code no.
AK-CC 550A	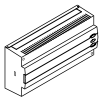	Case controller with MODBUS data communication Sensor connections are with screw terminals	**084B8030**
		Case controller with MODBUS data communication Sensor connections are with plug connections	**084B8029** **084B8129 (12 pcs)**
EKA 175		Data communication module LON RS 485	**084B8579**
EKA 178B		Data communication module MODBUS	**084B8571**
EKA 176		Data communication module DANBUSS	**084B8583**
EKA 163B		External display with plug for direct connection	**084B8574**
EKA 164B		External display with operation buttons and plug for direct connections	**084B8575**
EKA 163A		External display with screw terminals	**084B8562**
EKA 164A		External display with operation buttons and screw terminals	**084B8563**

СтолицаХолода
гипермаркет холодильного оборудования
создаем холод сохраняем тепло
www.stolicaholoda.ru

Danfoss can accept no responsibility for possible errors in catalogues, brochures and other printed material. Danfoss reserves the right to alter its products without notice. This also applies to products already on order provided that such alternations can be made without subsequential changes being necessary in specifications already agreed.
All trademarks in this material are property of the respecitve companies. Danfoss and Danfoss logotype are trademarks of Danfoss A/S. All rights reserved.

СтолицаХолода гипермаркет холодильного оборудования
создаем холод сохраняем тепло
www.stolicaholoda.ru