SANYO

FILE NO.

INDOOR UNIT

SPW-D363GH56

INDOOR UNIT		APPLICABLE OUTDOOR UNIT	VOLT / φ / Hz
MODEL No.	PR. CODE No.	MODEL No.	
SPW-D363GH56	854 011 57	SPW-C703GY8	IN : 220-240 / 1 / 50 OUT : 220-240 / 1 / 50 : 380-415 / 3 / 50
		SPW-C903GY8	
		SPW-C703GYH8	
		SPW-C903GYH8	
		SPW-C363GH8	

CONTENTS

■ **EXPLODED VIEW** 2
- ● Indoor Unit
  SPW-D363GH56 2

■ **PARTS LIST** 3
- ● Indoor Unit
  SPW-D363GH56 3

■ **ELECTRIC WIRING DIAGRAM** 4

8546482915300

REFERENCE No. P L832053

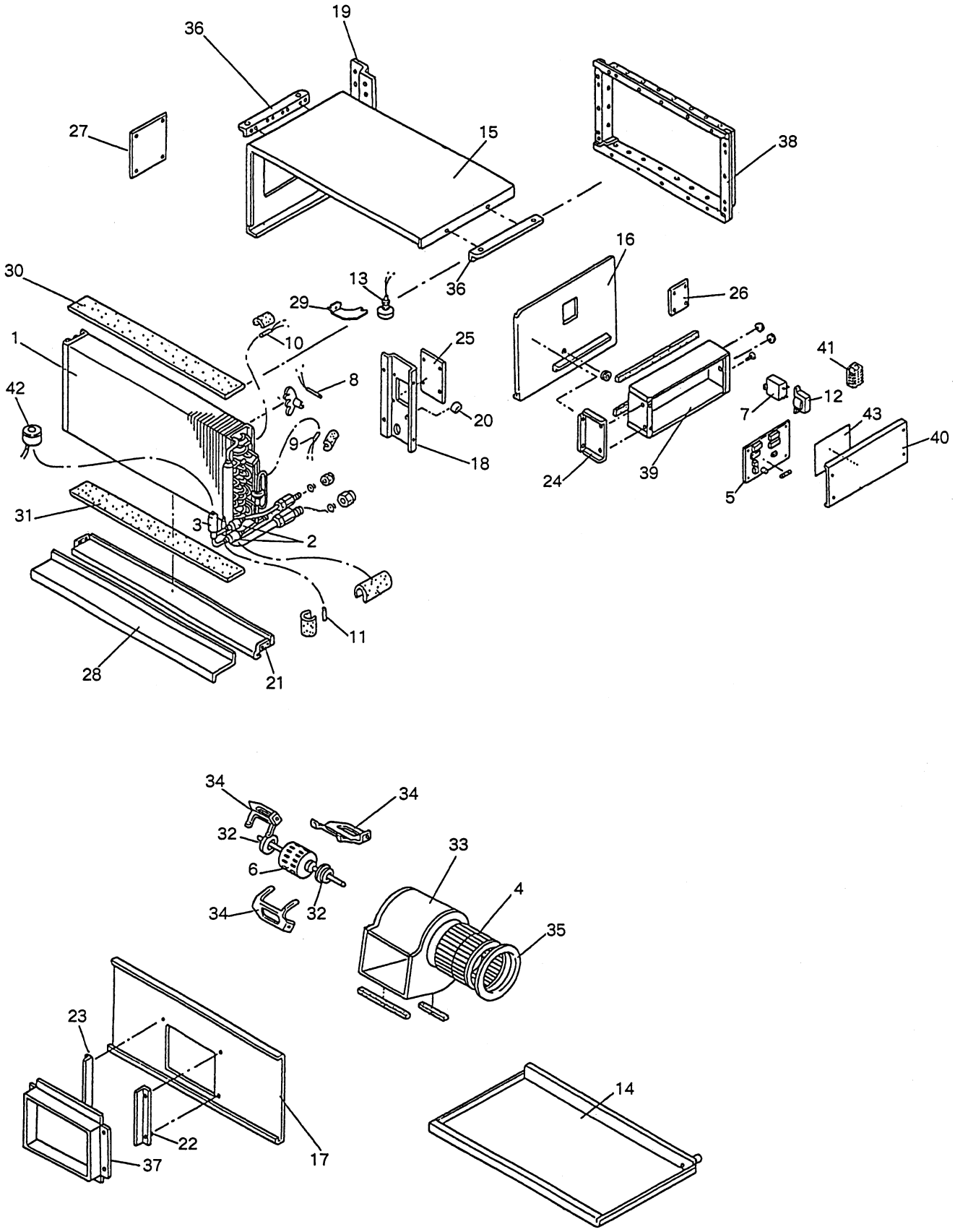
19
36
27
15
38
16
30
13
36
26
29
10
25
41
1
8
42
20
7
12
43
9
18
40
24
39
5
31
3
2
11
28
21
34
34
32
33
6
4
34
32
35
23
14
22
37
17

SPW-D363GH56
INDOOR UNIT

ATTENTION !

To ensure correct parts supply, please let us know followings, when you make service parts order:
1. Part No. 2. Description 3. Q'ty 4. Volts-Hz-Ph 5. Product Model No.

Key No.	Part No.	Description	Q'ty	Reference No.
* 1	638 011 8366	Heat Exchanger Ass'y	1	854-0-4119-33000
* 2	623 101 8968	Strainer Ass'y	2	854-0-4522-13100
* 3	638 010 8251	Solenoid Control Valve HKV-30D16	1	854-2-4548-11900
* 4	623 068 3310	Centrifugal Fan Ass'y	1	854-0-2501-14300
* 5	638 010 9074	P.C.B. Ass'y CR-X253GH	1	854-0-5178-09700
* 6	638 011 8717	Fan Motor Ass'y KFC4X-201B5P	1	854-0-5202-15700
* 7	638 008 8249	Fixed Capacitor UPMDD-440V/7.0MF	1	4-2239-56167
* 8	638 011 8724	Thermistor (Indoor Air) KTEC-35-S2	1	854-0-5259-11600
* 9	638 011 7956	Thermistor (Indoor Coil) PBC-41E-S36	1	854-0-5259-12100
* 10	638 011 8731	Thermistor (Indoor Coil) PBC-41E-S36	1	854-0-5259-14000
* 11	638 011 8748	Thermistor (Indoor Coil) PBC-41E-S25	1	854-0-5259-13000
* 12	638 011 6362	Transformer Ass'y ATR-I1215TB	1	854-0-5263-06600
* 13	638 011 8755	Switch Ass'y FS-3502-204	1	854-0-5257-03400
* 14	638 011 8762	Drain Pan Ass'y	1	854-0-2301-45201
15	638 011 8786	Cabinet Ass'y (incl INS)	1	854-0-1104-163H1
16	638 011 8793	Side Panel Ass'y (incl INS)	1	854-0-1102-305H1
17	638 011 8809	Front Panel (incl INS)	1	854-2-1101-434H0
18	638 002 8252	Mounting Plate, Evaporator	1	854-2-2303-27801
19	623 105 8971	Mounting Plate, Evaporator	1	854-2-2303-19201
20	623 078 4994	Mounting Plate	1	854-2-2360-11811
21	623 078 2204	Guide, Drain Pan	1	854-2-2341-20801
22	623 079 7840	Mounting Plate	1	854-2-2518-28500
23	623 079 7857	Mounting Plate	1	854-2-2518-28600
24	623 076 9137	Mounting Plate, Elec Box	1	854-2-2234-14700
25	623 077 0355	Mounting Plate, Evaporator	1	854-2-2303-18401
26	638 011 8823	Mounting Plate (incl INS)	1	854-2-2360-759H1
27	638 011 8830	Mounting Plate (incl INS)	1	854-2-2360-760H1
28	623 111 0204	Mounting Plate	1	854-2-2360-76101
29	638 011 8847	Mounting Plate	1	854-2-2361-26301
30	623 077 5701	Packing	1	854-2-2336-38200
31	623 105 8995	Packing	1	854-2-2336-39000
32	623 079 9875	Cushion Rubber	2	854-2-2534-12900
33	623 068 4409	Fan Casing Ass'y	1	854-0-2502-17901
34	623 110 8782	Support Motor Ass'y	3	854-0-2511-20101
35	623 079 8052	Air Guide	1	854-2-2519-11501
36	638 002 7729	Mounting Panel	2	854-2-1127-17301
37	638 011 8854	Flange Ass'y, Duct (incl INS)	1	854-0-2306-211H1
38	638 011 8861	Flange Ass'y, Duct (incl INS)	1	854-0-2306-260H1
39	638 011 8878	Elec. Component Box Ass'y	1	854-0-5301-68701
40	623 105 8797	Cover Plate	1	854-2-5304-33500
41	638 010 8183	Terminal Base	1	1FJ-4-J3A0-02200
42	638 010 7698	Magnetic Coil EKV-MOZS559E0	1	1FJ-4-L8A0-01100
43	638 011 8908	Elec Wiring Diagram	1	854-2-5268-42700
44	638 010 9395	Operation Manual	1	854-6-4189-10900

NOTE: Metal and plastic parts will be supplied basically with necessary heat insulation pads or packing.
Each key number with an asterisk (*) means the recommended service parts.

■ ELECTRIC WIRING DIAGRAM

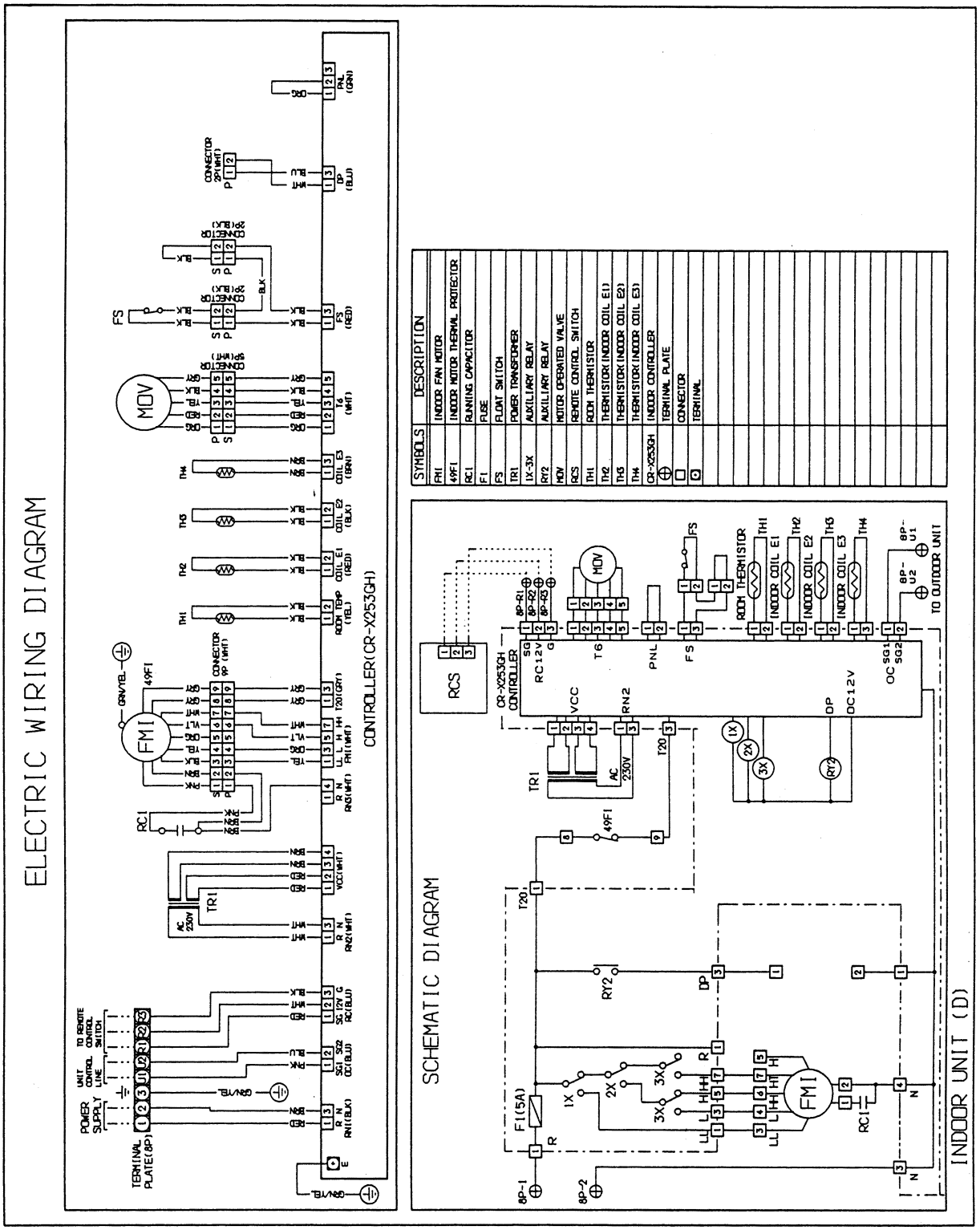

SANYO Electric Co., Ltd.
Osaka, Japan
T0996 Ⓐ 300 Printed in Japan