Parts List

SANYO

File No.

Air Conditioner

OUTDOOR UNIT
SAP-C71GH/R

Model No.	Prod.Code	Volt-Phase-Hertz
SAP-C71GH/R-S	1 852 068 87	220-240-1-50

REFERENCE No.PL 705305

SAP-C71GH/R
OUTDOOR UNIT

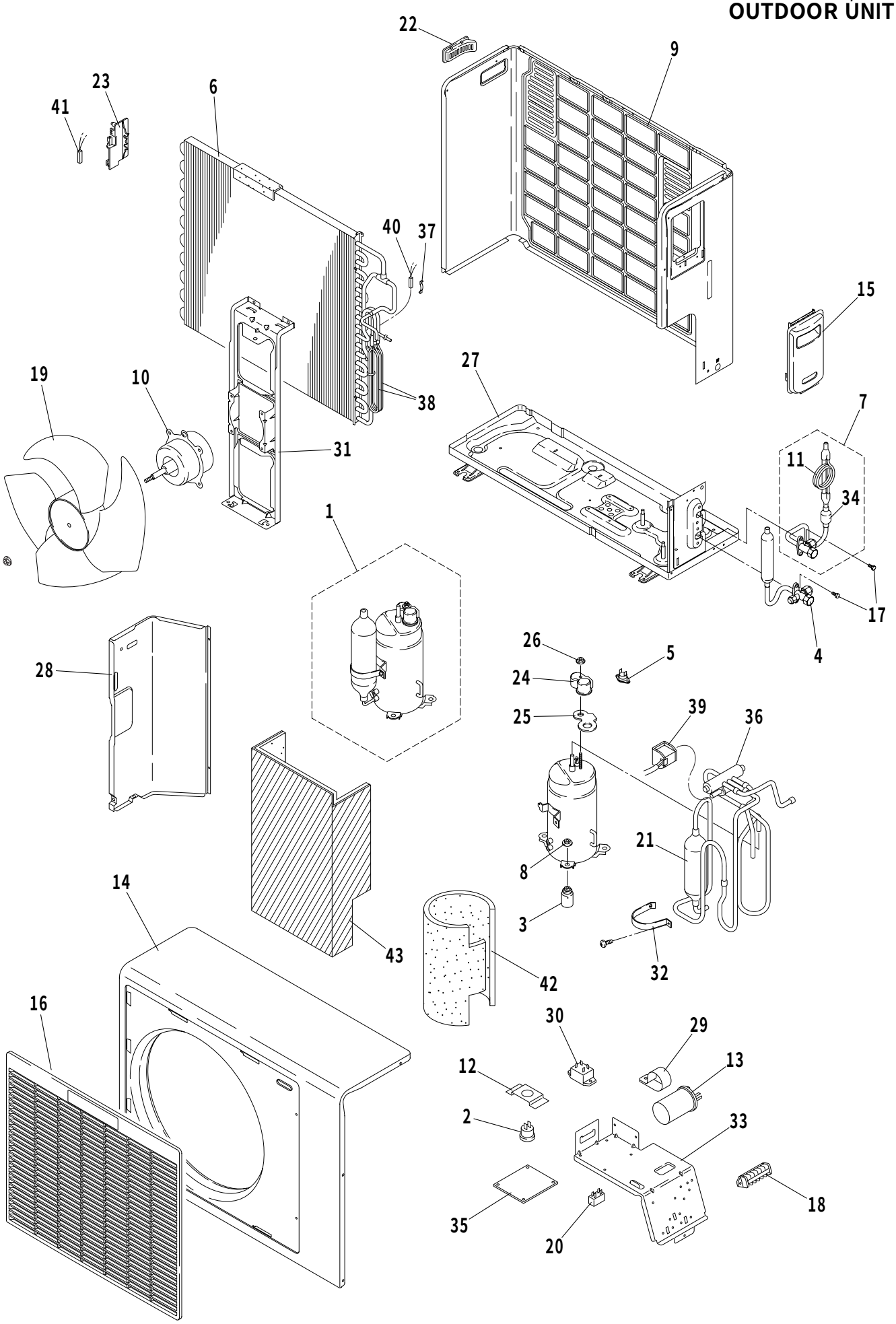

ATTENTION !
To ensure correct parts supply,please let us know followings,
when you make service parts order:
1.Part No. 2.Description 3.Q'ty 4.Volts-Hz-Ph 5.Product Model No.

SAP-C71GH/R
OUTDOOR UNIT

Key No.	Part No.	Description	Q'ty	Reference No.
* 1	623 139 3423	Compressor Ass'y	0	852-0-4516-30000
* 2	623 149 6957	Over road Relay MRA99802-9201	1	1FA-4-S2C0-00100
3	623 155 5609	Cushion Rubber	3	852-2-2390-22800
4	623 151 3388	Valve Ass'y 3/8 in.	1	852-0-4501-89900
* 5	623 097 8898	Thermostat CS-7C115	1	4-2339-60026
6	623 151 3371	Condenser Ass'y	1	852-0-4102-76000
7	623 151 3364	Valve Ass'y 1/4 in.	1	852-0-4501-90100
8	623 029 6534	Nut Special Ass'y	3	851-0-2395-10501
9	623 151 3203	Rear Panel	1	852-2-1120-25601
* 10	623 151 3401	Fan Motor UE6-21AH5PC-S	1	525-0-0000-81155
11	623 151 3395	Capillary Tube OD3 ID1.2 L450	1	852-2-4268-20700
12	623 145 9846	Mounting	1	851-2-2340-10410
* 13	623 097 2339	Fixed Capacitor WME-RS 400V/20MF	1	4-2239-56333
14	623 155 5616	Cabinet	1	852-2-1112-24901
15	623 150 7288	Cover Plate Ass'y	1	852-0-5302-17400
16	623 151 2688	Guard Ass'y	1	852-0-1111-16900
17	623 090 6907	Deltite Screw	4	3-9201-61601
18	623 151 3425	Terminal Base OPSA-20-9P	1	1FA-4-J3A0-08600
19	623 150 7349	Propeller Fan	1	852-2-2502-14001
* 20	623 001 1618	Fixed Capacitor UPMDD-440V/1.5MF	1	4-2239-56158
21	623 103 9307	Accumulator Ass'y	1	851-0-4507-15200
22	623 150 7332	Handle	1	852-2-2303-12301
23	623 151 1209	Mounting Thermostat	1	852-2-5303-22600
24	626 040 0765	Cover Terminal	1	801-2-6194-13300
25	626 040 1021	Gasket Terminal	1	801-2-5303-14800
26	626 040 0888	Nut 5mm	1	801-2-8305-10100
27	623 155 5623	Bottom Plate Ass'y	1	852-0-2202-69500
28	623 151 3227	Partition Plate Ass'y	1	852-0-2209-25300
29	623 054 8022	Clip, Capacitor	1	852-2-5301-21201
* 30	623 002 4762	Relay DFU24D1-F(M)	1	4-2329-56282
31	623 151 3241	Mounting Plate, Fan Motor	1	852-2-2354-21011
32	623 051 3907	Band Mounting	1	852-2-2356-17201
33	623 151 2732	Elec. Component Box	1	852-2-5307-56501
34	623 043 4059	Strainer Ass'y	1	852-0-4506-14000
* 35	623 138 2991	P.C.B. Ass'y POW-C96GH-S	1	851-0-5172-31100
36	623 146 3836	Solenoid Valve Ass'y	1	852-0-4509-13200
37	623 054 8640	Mounting Thermostat	1	852-2-5303-14900
38	623 151 3449	Capillary Tube OD3 ID1.0 L100	2	852-2-4268-20600
39	623 151 3432	Magnetic Coil LB81012	1	1FA-4-L8A0-02300
* 40	623 002 9149	Thermostat TRS02-12MSR	1	4-2339-56176
* 41	623 155 5630	Thermostat Other TRS02-M10MSR430	1	1FA-4-S4Z0-00800
42	623 053 0409	Insulation	1	852-2-2476-16800
43	623 154 3026	Insulation	1	852-2-2476-48800

NOTE: Metal and plastic parts will be supplied basically with necessary heat insulation pads or packing. Each key number with an asterisk (*) means the recommended service parts.

SANYO Electric Co.,Ltd
Osaka, Japan
2/00 Printed in Japan