SANYO

FILE NO.

NOTICE

○ CORRECTION ● PRODUCTION CHANGE

○ SERVICE FLASH ○ ADD INFORMATION

PLEASE ADD THIS NOTICE TO THE MANUALS LISTED BELOW.

CATEGORY	: AIR CONDITIONER	DATE	: September.2000
MODEL	: SAP-C121GA-S	REF.No.	: PL 705327
DESTINATION	: General	ISSUE No.	: 1

THE REASON OF CHANGE.

A:Misprint B:Quality Reliability C:Standardization
D:Desingn Change E:Addition of Missing Parts F:Parts Compatibility

Page & Section	Key. No.		Part No.	Description	Q'ty	Interchange-ability	Remarks
Page No.3	1	Old	623 151 2671	Compressor Ass'y	1	———	D
	1	New	623 157 0343	Compressor Ass'y	1	———	

(1) Parts Change Old No.1 852 0 4516 35500
New No.1 85S 0 4516 00100

09/00 Printed in Japan Reference No. PL 705327-01

SANYO ELECTRIC CO,.LTD

Parts List

SANYO

File No.

Air Conditioner

OUTDOOR UNIT
SAP-C121GA

Model No.	Prod.Code	Volt-Phase-Hertz
SAP-C121GA-S	1 852 069 64	220-240-1-50

REFERENCE No.PL 705327-01

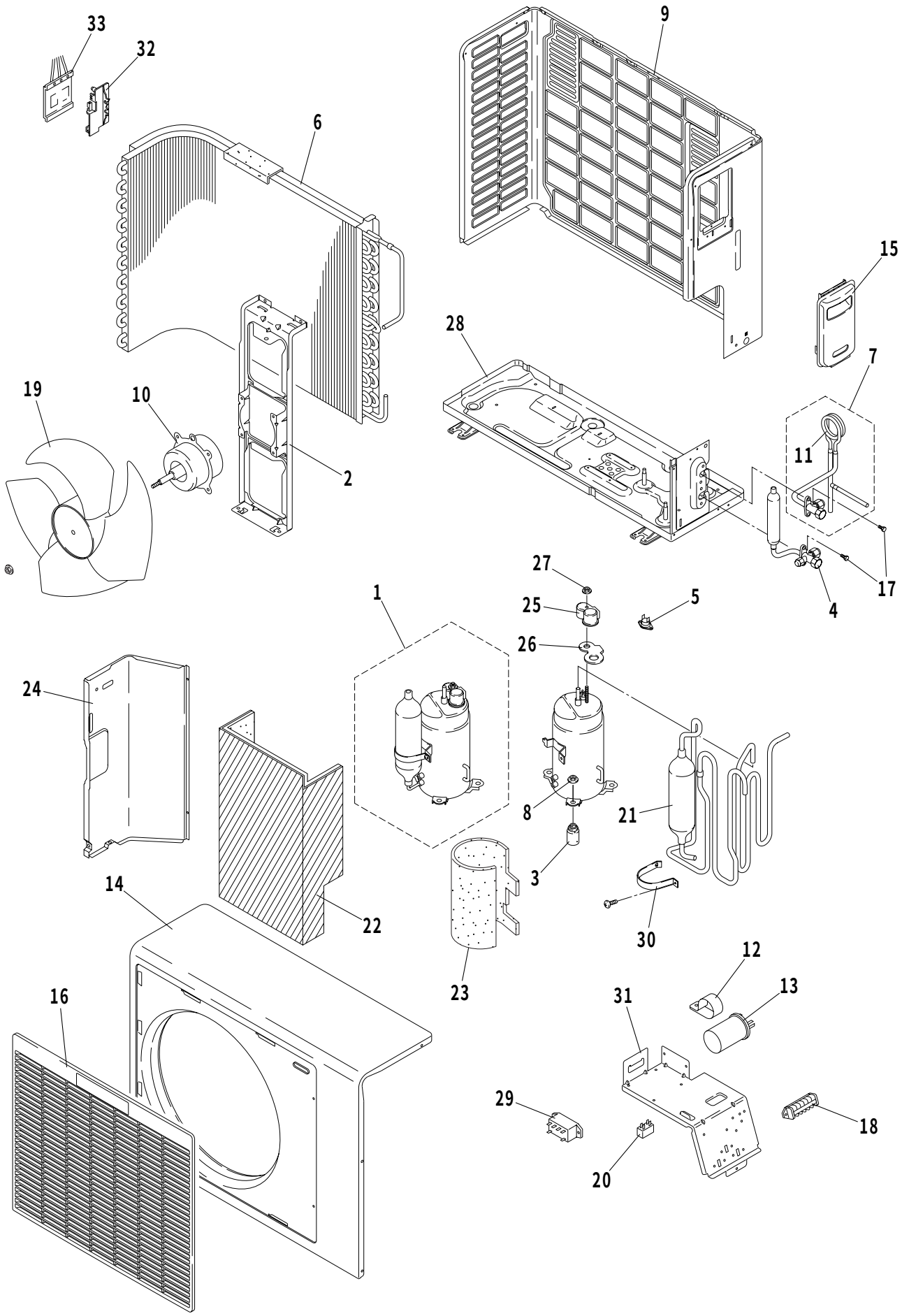
33
32
6
9
15
28
7
19
10
11
2
27
17
1
25
5
4
26
24
8
21
3
14
22
30
12
23
13
16
31
29
18
20

ATTENTION !
To ensure correct parts supply,please let us know followings,
when you make service parts order:
1.Part No. 2.Description 3.Q'ty 4.Volts-Hz-Ph 5.Product Model No.

SAP-C121GA
OUTDOOR UNIT

Key No.	Part No.	Description	Q'ty	Reference No.
* 1	623 157 0343	Compressor Ass'y	1	85S-0-4516-00100
2	623 151 2756	Mounting Plate, Fan Motor	1	852-2-2354-22411
3	623 035 0212	Cushion Rubber	3	851-2-2390-15500
4	623 151 2664	Valve Ass'y 1/2 in.	1	852-0-4501-93000
* 5	623 121 0539	Relay MRA99122-9201	1	4-2329-69344
6	623 156 3499	Condenser Ass'y	1	85S-0-4102-02700
7	623 151 2640	Valve Ass'y 1/4 in.	1	852-0-4501-93100
8	623 029 6497	Nut Special Ass'y	3	851-0-2395-10201
9	623 156 3475	Rear Panel	1	852-2-1120-25502
* 10	623 156 3505	Fan Motor UE6S-21AC5P-S	1	525-0-0000-87605
11	623 151 2695	Capillary Tube OD3 ID1.5 L450	1	852-2-4268-22000
12	623 054 8022	Clip, Capacitor	1	852-2-5301-21201
* 13	623 091 3301	Fixed Capacitor WME-RS 400V/25MF	1	4-2239-56376
14	623 156 3468	Cabinet	1	852-2-1112-24902
15	623 156 3451	Cover Plate Ass'y	1	85S-0-5302-00200
16	623 156 3444	Guard Ass'y	1	85S-0-1111-00100
17	623 090 6907	Deltite Screw	4	3-9201-61601
18	623 003 2705	Terminal Base FT-016	1	4-2379-51009
19	623 150 7349	Propeller Fan	1	852-2-2502-14001
* 20	623 001 1618	Fixed Capacitor UPMDD-440V/1.5MF	1	4-2239-56158
21	623 118 2553	Accumulator Ass'y	1	852-0-4511-19700
22	623 154 3026	Insulation	1	852-2-2476-48800
23	623 053 0812	Insulation	1	852-2-2476-20900
24	623 151 2718	Partition Plate Ass'y	1	852-0-2209-25700
25	626 040 0765	Cover Terminal	1	801-2-6194-13300
26	626 040 0994	Gasket Terminal	1	801-2-5303-14600
27	626 040 0888	Nut 5mm	1	801-2-8305-10100
28	623 156 3482	Bottom Plate Ass'y	1	852-0-2202-66302
* 29	623 131 2547	Relay G7L-2A-TUB	1	4-2329-56722
30	623 034 9452	Band Mounting	1	851-2-2356-16901
31	623 151 2732	Elec. Component Box	1	852-2-5307-56501
* 32	623 002 9019	Thermostat MQT5S	1	4-2339-56155
33	623 151 1209	Mounting Thermostat	1	852-2-5303-22600

NOTE: Metal and plastic parts will be supplied basically with necessary heat insulation pads or packing. Each key number with an asterisk (*) means the recommended service parts.

SANYO Electric Co.,Ltd
Osaka, Japan
9/00 Printed in Japan