INSTALLATION MANUAL

Refrigerant
R407C

Simultaneous operating multi type

(PART NO. 9363769012)

This air conditioner uses new refrigerant HFC (R407C).

For authorized service personnel only.

⚠ **WARNING!**	This mark indicates procedures which, if improperly performed, might lead to the death or serious injury of the user.
⚠ **CAUTION!**	This mark indicates procedures which, if improperly performed, might possibly result in personal harm to the user, or damage to property.

⚠ **WARNING**	
(1)	**For the air conditioner to operate satisfactorily, install it as outlined in this installation installation manual.**
(2)	**Connect the indoor unit and outdoor unit with the air conditioner piping and cords available from our standard parts. This installation installation manual describes the correct connections using the installation set available from our standard parts.**
(3)	**Installation work must be performed in accordance with national wiring standards by authorized personnel only.**
(4)	**If refrigerant leaks while work is being carried out, ventilate the area. If the refrigerant comes in contact with a flame, it produces a toxic gas.**
(5)	**Do not turn on the power until all installation work is complete.**

- **Be careful not to scratch the air conditioner when handling it.**
- **After installation, explain correct operation to the customer, using the operating manual.**
- **Let the customer keep this installation installation manual because it is used when the air conditioner is serviced or moved.**
- **The maximum length of the piping is shown in Table 1. If the units are further apart than this, correct operation cannot be guaranteed.**

STANDARD PARTS

The following installation parts are supplied.
Use them as required.

Description	Q'ty	Application
Remote controller	1	Use for air conditioner operation
Flange joint assembly	1	For connecting the piping
Coupler heat insulation	1	For outdoor side pipe joint
Gasket	1	Installation between flange joint assembly and valve B
Bolt	2	For fixing the flange joint assembly
Drain pipe	3	For outdoor unit drain piping work (Reverse cycle model only)
Branch gas pipe	1	For distributing the connecting pipe (Gas side)
Insulation for branch gas pipe	1	For branch gas pipe
Branch liquid pipe	1	For distributing the connecting pipe (Liquid side)
Insulation for branch liquid pipe	1	For branch liquid pipe
Binder	7	For fixing the insulation for branch pipe

CONVEYANCE METHOD AND PRODUCT MASS

- If you are suspending the unit and conveying it to its installation location, place the ropes under the bottom, using the two places on the front and rear provided for suspending it.
- Be sure to suspend the unit with ropes from 4 places and be careful not to subject it to impacts.
- Place protective boards on the unit so the rope doesn't make contact with the bell mouth.
- Use 2 ropes which are 7 m in length or longer.

Fig. 1

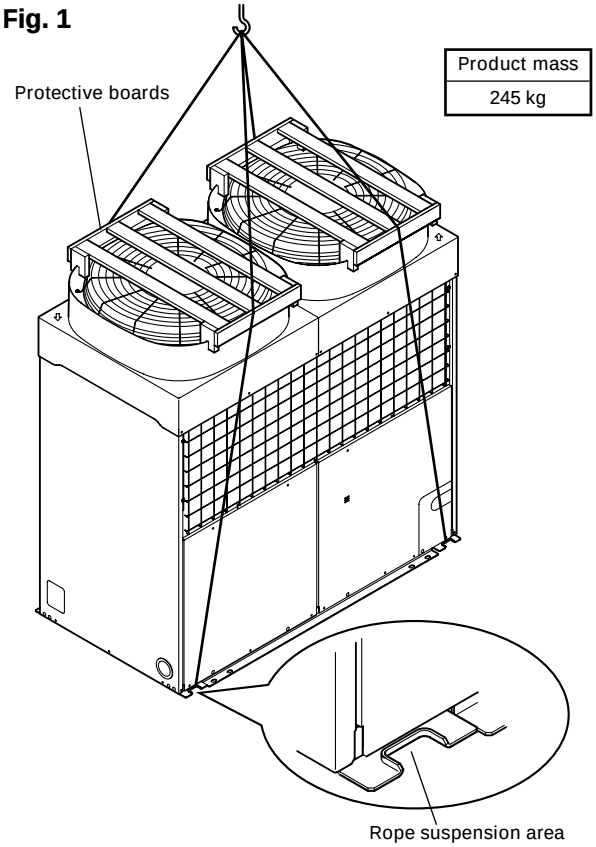

SELECTING THE MOUNTING POSITION

Decide the mounting position together with the customer as follows.

⚠ WARNING

(1) Install the unit where it will not be tilted by more than 5°.

(2) When installing the outdoor unit it may be exposed to strong wind, fasten it securely.

(1) If possible, do not install the unit where it will be exposed to direct sunlight. (If necessary, install a blind that does not interfere with the air flow.)
(2) Install the outdoor unit in a place where it will be free from being dirty or getting wet by rain as much as possible.
(3) Install the unit where connection to the indoor unit is easy.
(4) During heating operation, drain water flows from the outdoor unit. Therefore, install the outdoor unit in a place where drain water flow will not be obstructed. (Reverse cycle model only)
(5) Do not place animals and plants in the path of the warm air.
(6) Take the air conditioner weight into account and select a place where noise and vibration are small.
(7) Select place so that the warm air and noise from the air conditioner do not disturb neighbours.
(8) Install inlet and outlet ducts in order to maintain stable operation in cold or snowy regions.
(9) Provide the space shown in Fig. 2 so that the air flow is not blocked.

• Installing the unit individually

Fig. 2

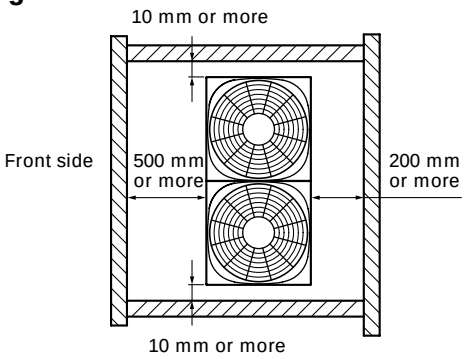

• Installing continuous units

Fig. 3

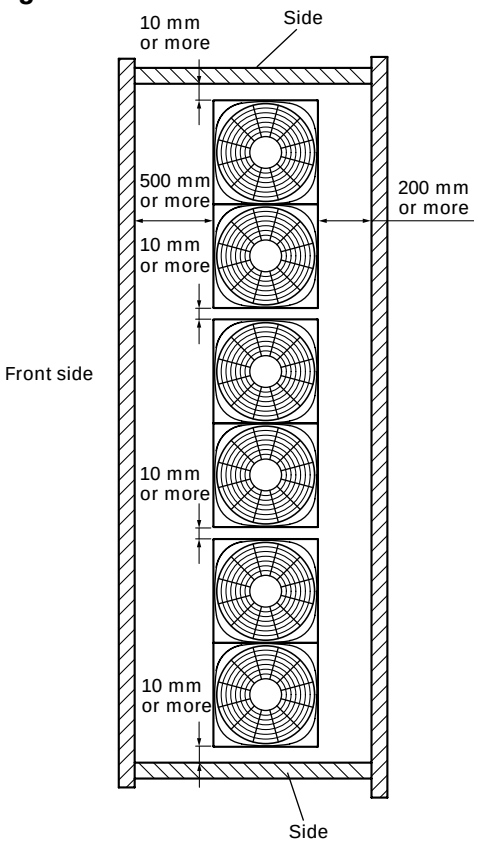

Fig. 4

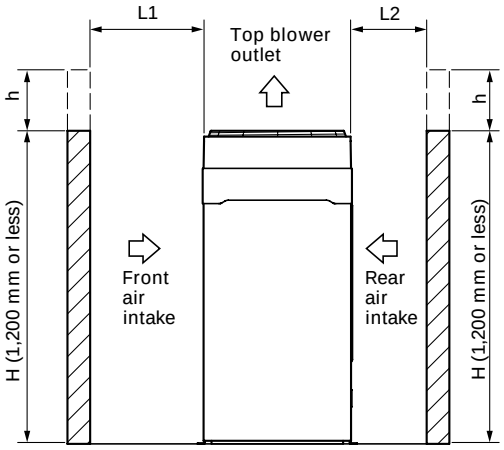

- There is no limit to the height of the side wall.
- The height of the wall (H) on the front side and rear side should be 1,200 mm or less (Fig. 4).
- If the wall height exceeds 1,200 mm, add dimension (h) to the respective service space dimensions L1 and L2 (Fig. 4).

CONNECTION PIPE REQUIREMENT

Table 1

Diameter		Maximum length	Maximum height (between indoor and outdoor)
Small	Large		
12.7 mm	28.58 mm	50 mm	30 mm

- Use 0.7 mm to 1.2 mm thick pipe.
- Use pipe with water-resistant heat insulation.
- Use pipe that can withstand a pressure of 3,040 kPa.

ELECTRICAL REQUIREMENT

Table 2

Power supply cord (mm^2)	Maximum	8.0
	Minimum	6.0
Connection cord (mm^2)	Maximum	2.5
	Minimum	1.5
Fuse capacity (A)		40

- Always use H07RN-F or equivalent as the connection cord.
- Install the disconnection device with a contact gap of at least 3 mm nearby the units. (Both indoor unit and outdoor unit)
- When using a circuit breaker, be sure to use one rated 30 mA or more.

INSTALLATION PROCEDURE

Install the air conditioner as follows.

1. OUTDOOR UNIT INSTALLATION

1. OUTDOOR UNIT PROCESSING

When the outdoor unit will be exposed to strong wind, fasten it with anchor bolts at the four places indicated by the arrows (Fig. 5).

(1) Anchor Bolt Positions

- The distance between the left and right anchor bolts should be at least 850 mm.

Fig. 5

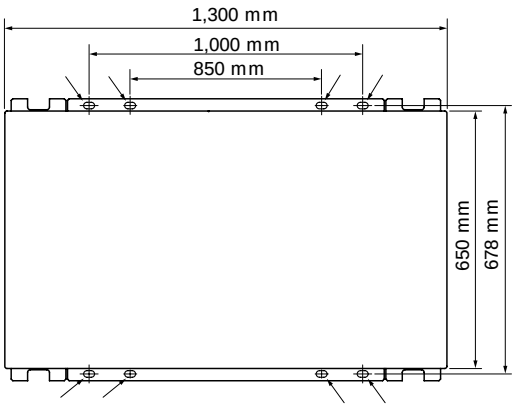

- Set the unit on a strong stand, such as concrete blocks to minimize shock and vibration.
- Do not set the unit directly on the ground because it will cause problems.

(2) Drain Processing (Reverse cycle model only)

- Remove the rear panel.

Fig. 6

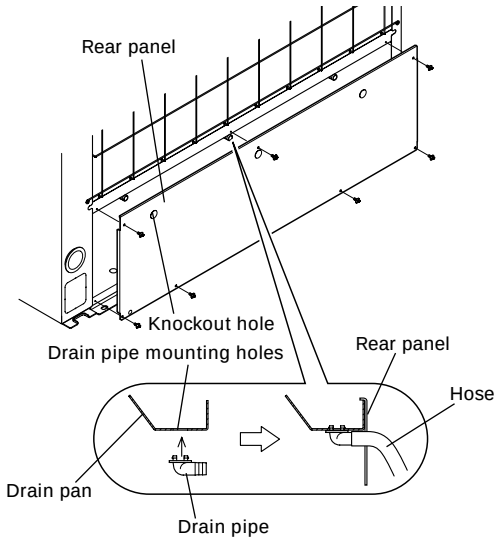

- Since the drain water flows out of the outdoor unit during heating operation, install the drain pipe and connect it to an commercial 16 mm hose. (When heating the outdoor temperature is 0 °C or less, construct so that drain water from the outdoor unit will not freeze in the drain pipe.)
- Always use a drain pipe at three places.

2. OUTDOOR UNIT CONNECTION CORD AND PIPE CONNECTION PREPARATIONS

(1) Piping and connection cord mounting direction (5-way mounting possible).

Fig. 7

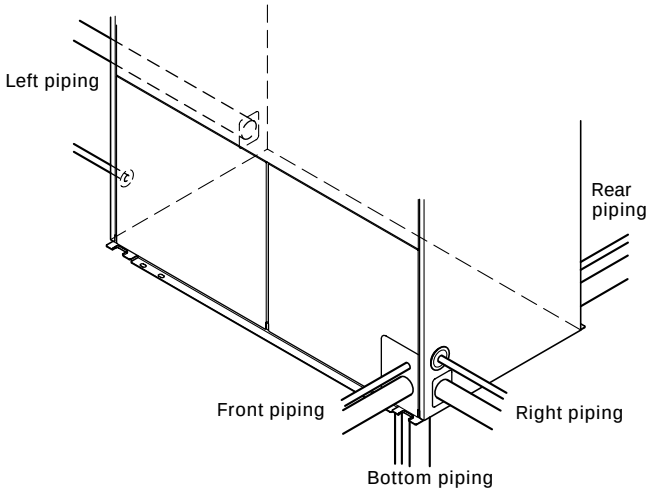

- Remove the rear panel in order to install the left piping.
- If a mounting bracket is installed at the knockout hole section in the base, do not connect the piping from the bottom.

Fig. 8

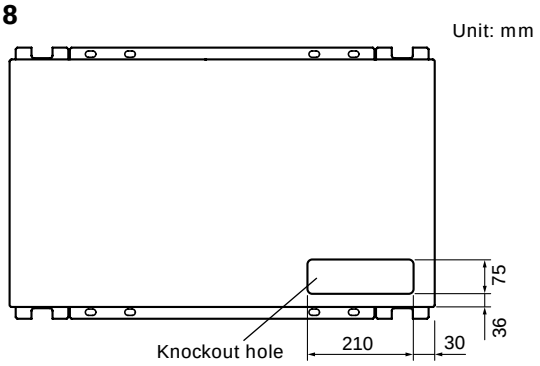

- If the piping is connected from the left and rear, be sure that there is enough space around the unit to make connections.

(2) Remove the front panel right.

Fig. 9

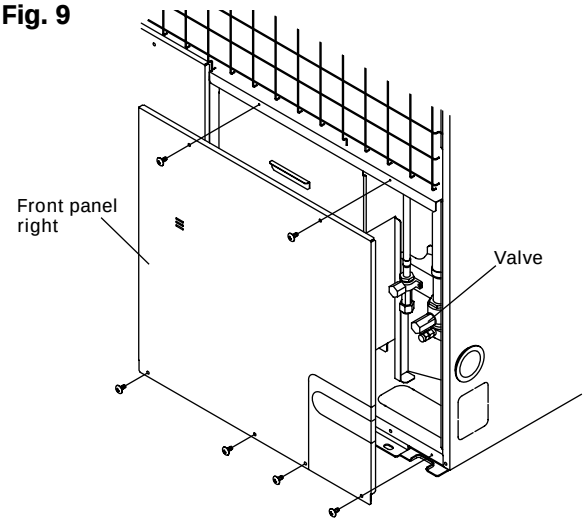

(3) Before connecting flange joint assembly to ball valve.
Remove bolts, valve plate and gasket.

Fig. 10

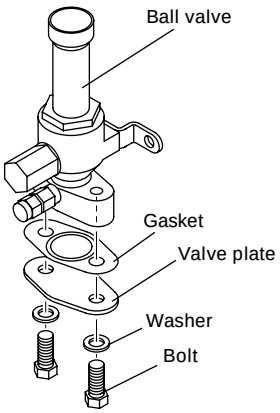

(4) Open the piping and connection cord knockout holes of the desired direction with nippers, etc.
After opening a hole in the center of bush, pierce with connection cord. (Rear, Right and Left wiring)

Fig. 11

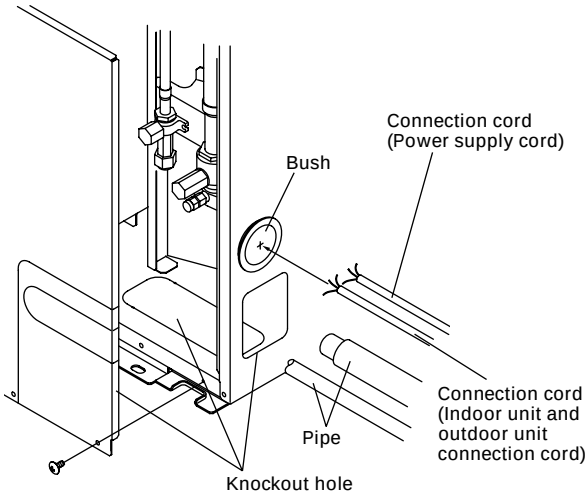

(5) Connect the piping and connection cord from the mounting holes.

(Example)

Fig. 12

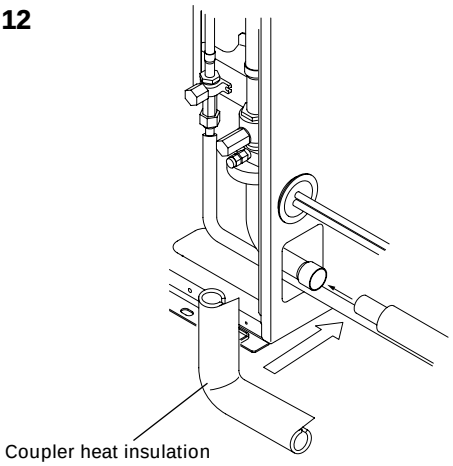

2. CONNECTING THE PIPING

⚠ CAUTION

(1) Do not use mineral oil on flared part. Prevent mineral oil from getting into the system as this would reduce the lifetime of the units.

(2) Never use piping which has been used for previous installations. Only use parts which are delivered with the unit.

(3) While welding the pipes, be sure to blow dry nitrogen gas through them.

1. FLARE PROCESSING

(1) Cut the connection pipe with pipe cutters so that the pipe is not deformed.
(2) Hold the pipe downwards so that cuttings cannot enter the pipe, remove the burrs.
(3) Remove the flare nut from the indoor unit pipe and outdoor unit and assemble as shown in (Table 3) and insert the flare nut onto the pipe, and flare with a flaring tool.
(4) Check if the flared part "L" (Fig. 13) is spread uniformly and that there are no cracks.

Table 3

Pipe	Flare nut	L dimension
Small pipe (ø12.7 mm)	width across flats 24 mm	1.9 to 2.2 mm

Fig. 13

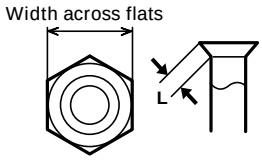

2. BENDING PIPES

The pipes are shaped by your hands. Be careful not to collapse them.

Fig. 14

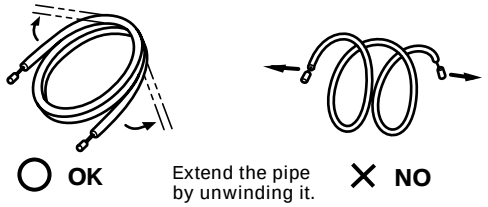

Do not bend the pipes in an angle more than 90°.
When pipes are repeatedly bent or stretched, the material will harden, making it difficult to bend or stretch them any more. Do not bend or stretch the pipes more than three times.

When bending the pipe, there is a possibility to collapse. In this case, cut the heat insulating pipe with a sharp cutter as shown in Fig. 15, and bend it after exposing the pipe. After bending the pipe as you want, be sure to put the heat insulating pipe back on the pipe, and secure it with tape.

Fig. 15

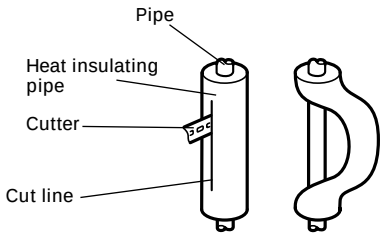

⚠ CAUTION

(1) To prevent breaking of the pipe, avoid sharp bends.
Bend the pipe with a radius of curvature of 150 mm or over.

(2) If the pipe is bent repeatedly at the same place, it will break.

3. PERMISSIBLE LENGTH OF CONNECTION PIPING

A. In the case of Two connection

Fig. 16

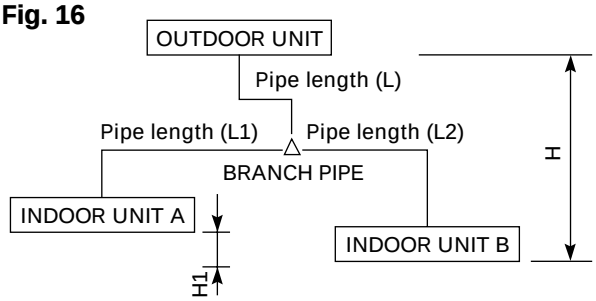

B. In the case of Three connection

Fig. 17

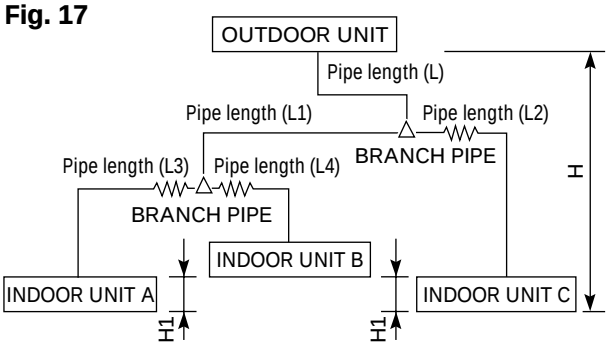

C. In the case of Four connection

Fig. 18

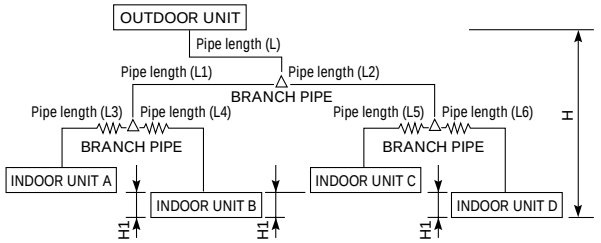

H : Maximum height (between indoor and outdoor)
H1 : Maximum height (between indoor and indoor)
: Indoor capillary tube

Table 4

	Pipe diameter			
	Liquid pipe		Gas pipe	
	Main pipe	Branch pipe	Main pipe	Branch pipe
Two	ø 12.7	ø 9.53	ø 28.58	ø 19.05
Three	ø 12.7	ø 9.53	ø 28.58	ø 19.05 L1, L2 ø 15.88 L3, L4
Four	ø 12.7	ø 9.53	ø 28.58	ø 19.05 L1, L2 ø 15.88 L3, L4, L5, L6

Table 5

	Actual pipe length			High - Low difference	
	Maximum permissible length	Branch pipe length	Branch pipe length difference	Indoor ~ Outdoor	Indoor ~ Indoor
Two	L+L1, L+L2 50 m	L1, L2 10 m	L1-L2 5 m	H 30 m	* H 0.5 m
Three	L+L1+L3, L+L1+L4 L+L2 50 m	L1+L3, L1+L4 L2 10 m	(L1+L3)-L2, (L1+L4)-L2 L3-L4 5 m		
Four	L+L1+L3, L+L1+L4 L+L2+L5, L+L2+L6 50 m	L1+L3, L1+L4 L2+L5, L2+L6 10 m	(L1+L3)-(L2+L5), (L1+L4)-(L2+L5) (L1+L3)-(L2+L6), (L1+L4)-(L2+L6) L3-L4, L5-L6 5 m		

∗ Acceptable to 3 m only when used with AB (floor console) type indoor unit.

- Separately sold option parts should be used in branches.

Table 6

	Branch option parts					
	Gas pipe		Liquid pipe	Joint pipe		
	ø19.05 ø19.05 ø28.58	ø15.88 ø15.88 ø19.05	ø9.53 ø9.53 ø12.7	ø15.88 ↓ ø19.05	ø19.05 ↓ ø15.88	ø12.7 ↓ ø9.53
Two	(Standard part 1)	——	(Standard part 1)	—	—	—
Three	(Standard part 1)	Option part 1	(Standard part 1) Option part 1	Option part 1	Option part 1	Option part 1
Four	(Standard part 1)	Option part 2	(Standard part 1) Option part 2	Option part 1	—	Option part 2

- Connect the capillary tube provided with the indoor unit to the liquid branching pipe, except in the case of model 45.

4. CONNECTION PIPES

(1) Tighten the flare nut of the connection pipe at the outdoor unit valve connector.
(2) Seal with the accessory putty so that water does not enter at the top of the pipe insulation installed to the connection pipe.
(3) After connecting the pipes, an air tightness test must be performed. To perform the test, close the valve and increase the pressure of the nitrogen gas to 30 kg/cm² G.

Fig. 19

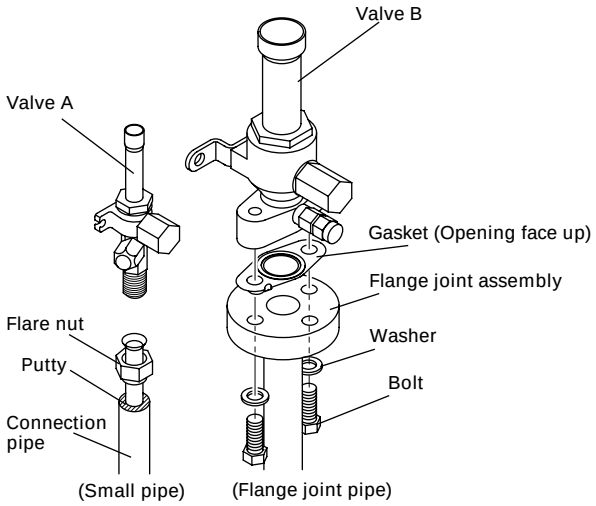

⚠ CAUTION

Be sure to apply the pipe against the port on the indoor unit correctly. If the centering is improper, the flare nut cannot be tightened smoothly. If the flare nut is forced to turn, the threads will be damaged.

When the flare nut is tightened properly by your hand, hold the body side coupling with a separate spanner, then tighten with a torque wrench (Fig. 20).

Fig. 20

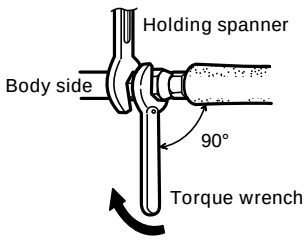

⚠ CAUTION

Hold the torque wrench at its grip, keeping it in the right angle with the pipe as shown in Fig. 21, in order to tighten the flare nut correctly.

- Connecting the flange joint pipe.

Fig. 21

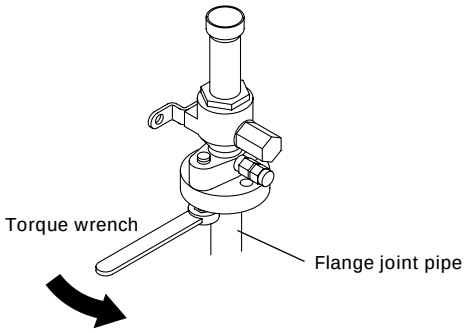

Table 7 : Flare nut tightening torque

Pipe	Tightening torque
Small pipe	500 to 550 kgf • cm (49 to 53.9 N • m)
Bolt (Flange joint pipe)	350 to 400 kgf • cm (34.3 to 39.2 N • m)

5. CONNECTING BRANCHES

(1) Connecting the branch liquid pipe.
1) Braze each part (connection pipe, indoor capillary tube, and branch liquid pipe) as shown in Fig. 22.
2) Wrap the two BR sheets around the indoor capillary tube as shown in Fig. 23.
3) Cover the indoor capillary tube and the branch liquid pipe with insulation (Fig. 24) and affix the insulation with tape.
4) Secure the insulation using the binders (Fig. 25).
- The branch liquid pipe, the joint pipe, and the insulation are available as optional parts.

Fig. 22

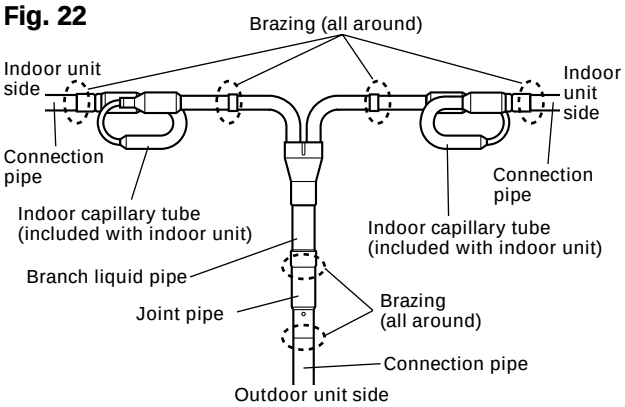

- Do not attach the indoor capillary tube to model 45.
- With Three and Four, attach the joint pipe (option parts).

Fig. 23

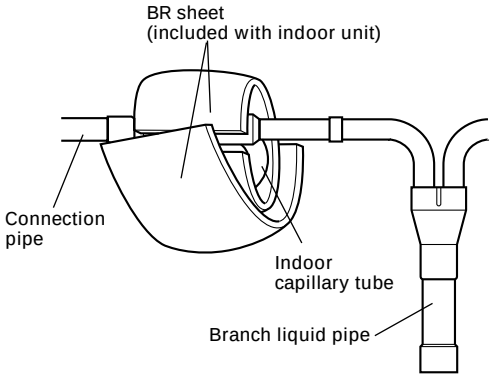

Fig. 24

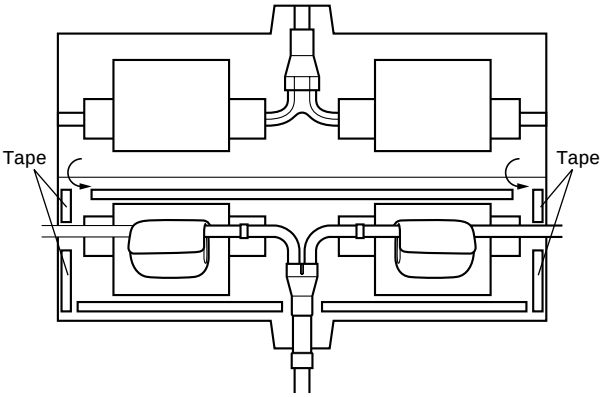

Fig. 25

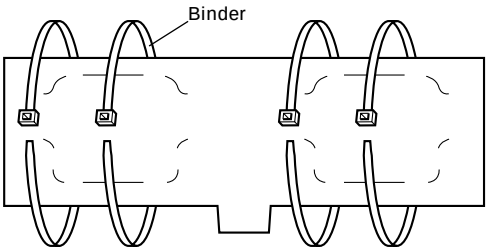

(2) Connecting the branch gas pipe.
1) Braze the branch gas pipe to the connecting pipe (Fig. 26).
2) Cover the branch gas pipe with insulation (Fig. 27) and affix the insulation with tape.
3) Secure the insulation using the binders (Fig. 28).

Fig. 26

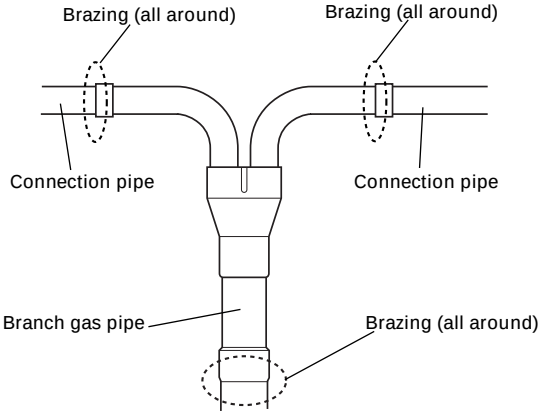

Fig. 27

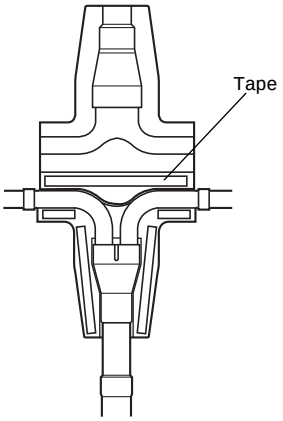

Fig. 28

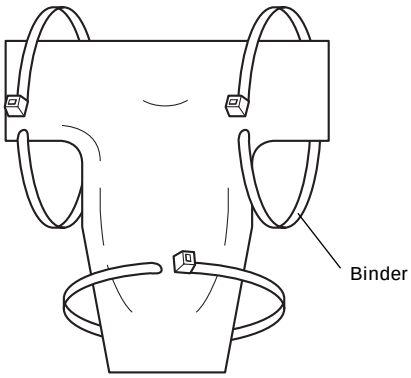

(3) Installation angle
Be sure that the branch liquid pipe and the branch gas pipe are installed so that they are either exactly horizontal or vertical (Fig. 29).

Fig. 29

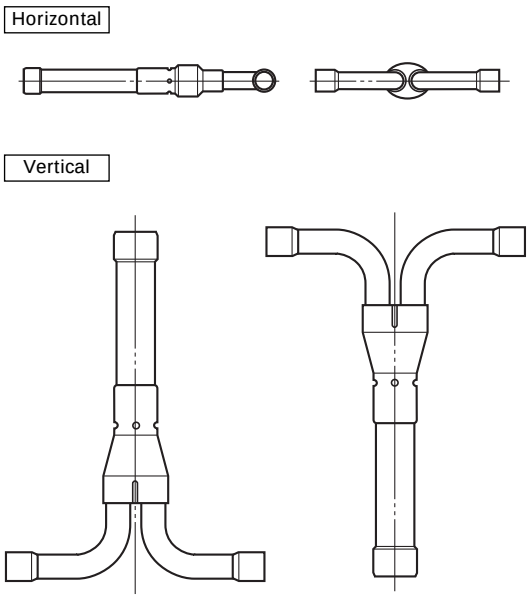

3. VACUUM PROCESS

⚠ CAUTION

(1) Do not purge the air with refrigerants but use a vacuum pump to vacuum the installation! There is no extra refrigerant in the outdoor unit for air purging!

(2) Use a vacuum pump for R407C exclusively. Using the same vacuum pump for different refrigerant may damage the vacuum pump or the unit.

1. VACUUM

(1) Remove the cap, and connect the gauge manifold and the vacuum pump to the charging valve by the service hoses.
(2) Vacuum the indoor unit and the connecting pipes until the pressure gauge indicates -76 cmHg.
(3) When -76 cmHg is reached, operate the vacuum pump for at least 1 hour.
(4) After vacuuming inside the indoor unit and the piping, remove the cap of the two valves.
(5) Open the spindle (handle) of the two valves from the closed state. (Table 9)
(6) Tighten the cap of the two valves to the specified torque.

Table 8

	Tightening torque	
	Large valve	Small valve
Handle	15 kgf • cm (1.47 N • m) or less	
Cap	150 to 200 kgf • cm (14.7 to 19.6 N • m)	

Table 9

Open valve state	Closed valve state
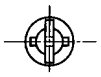	

∗ If the spindle (handle) is not fully open, performance will drop and an abnormal sound will be generated.

Fig. 30

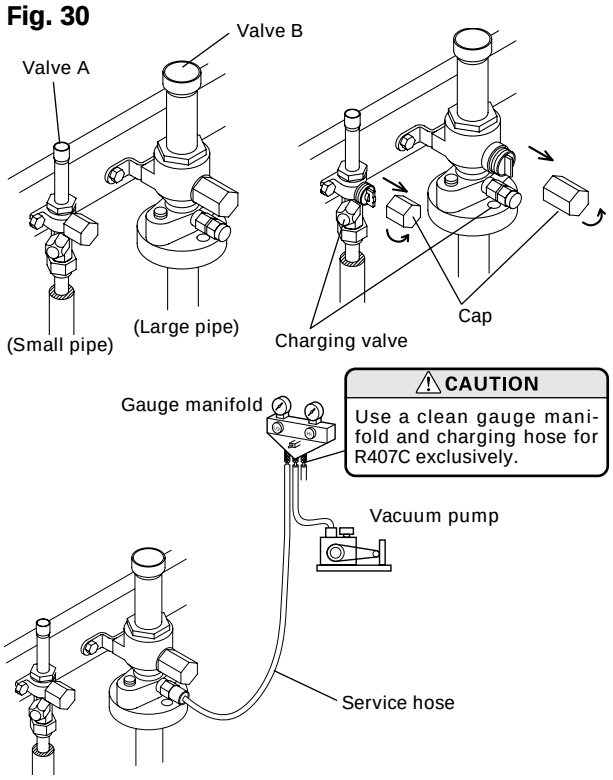

2. ADDITIONAL CHARGE

- Up to a pipe length of 30 m, charging with additional refrigerant is not necessary.
- If the pipe length exceeds 30 m, charging with refrigerant is necessary.
- Charge with additional refrigerant in the amounts shown in the table below.

Table 10

Actual pipe length	30 m (99 ft)	40 m (132 ft)	50 m (164 ft)	g/m (oz/ft)
Additional refrigerant (R407C)	None	1,000 g (35 oz)	2,000 g (70 oz)	100 g/m (3.5 oz/3.3 ft)

⚠ CAUTION

(1) When moving and installing the air conditioner, do not mix gas other than the specified refrigerant R407C inside the refrigerant circuit.

(2) When charging the refrigerant R407C, always use an electronic balance for refrigerant charging (to measure the refrigerant by weight).

(3) When charging the refrigerant, take into account the slight change in the composition of the gas and liquid phases, and always charge from the liquid phase side whose composition is stable.

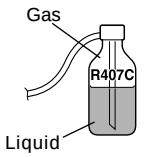

(4) Add refrigerant to the charging valve after the completion of the work.

(5) The maximum length of the piping is 50 m. If the units are further apart than this, correct operation can not be guaranteed.

4. ELECTRICAL WIRING

⚠ WARNING

(1) Before starting work, check that power is not being supplied to the outdoor unit.

(2) Match the terminal board numbers and connection cord colors with those of the outdoor unit. Erroneous wiring may cause burning of the electric parts.

(3) Connect the connection cord firmly to the terminal board. Imperfect installation may cause a fire.

(4) Always fasten the outside covering of the connection cord with the cord clamp. (If the insulator is chafed, electric leakage may occur.)

(5) Always connect the ground wire.

HOW TO CONNECT WIRING TO THE TERMINALS

A. For solid core wiring (or F-cable)

(1) Cut the wire end with a wire cutter or wire-cutting pliers, then strip the insulation to about 25 mm (15/16”) to expose the solid wire.

(2) Using a screwdriver, remove the terminal screw(s) on the terminal board.

(3) Using pliers, bend the solid wire to form a loop suitable for the terminal screw.

(4) Shape the loop wire properly, place it on the terminal board and tighten securely with the terminal screw using a screwdriver.

B. For strand wiring

(1) Cut the wire end with a wire cutter or wire-cutting pliers, then strip the insulation to about 10 mm (3/8”) to expose the strand wiring.

(2) Using a screwdriver, remove the terminal screw(s) on the terminal board.

(3) Using a round terminal fastener or pliers, securely clamp a round terminal to each stripped wire end.

(4) Position the round terminal wire, and replace and tighten the terminal screw using a screwdriver.

Fig. 31

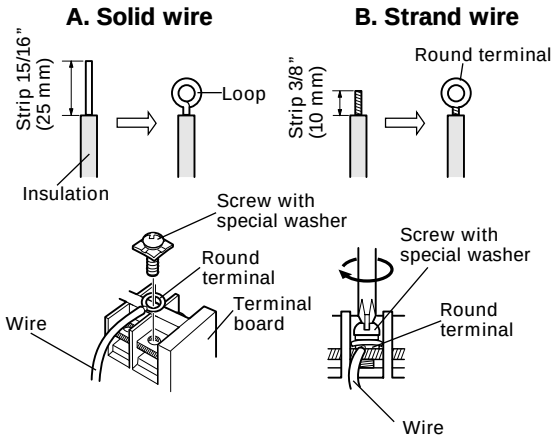

HOW TO FIX THE CONNECTION CORD AND POWER SUPPLY CORD AT THE CORD CLAMP

After passing the connection cord and power supply cord through the insulation tube, fasten it with the cord clamp.

Fig. 32

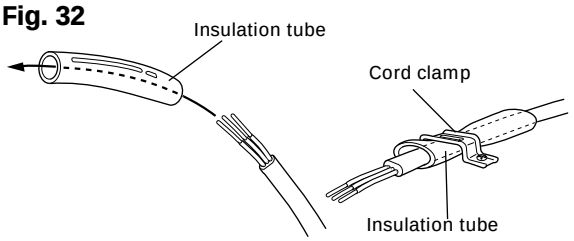

Use VW-1, 0.5 to 1.0 mm thick, PVC tube as the insulation tube.

(1) Remove the front panel right.

Fig. 33

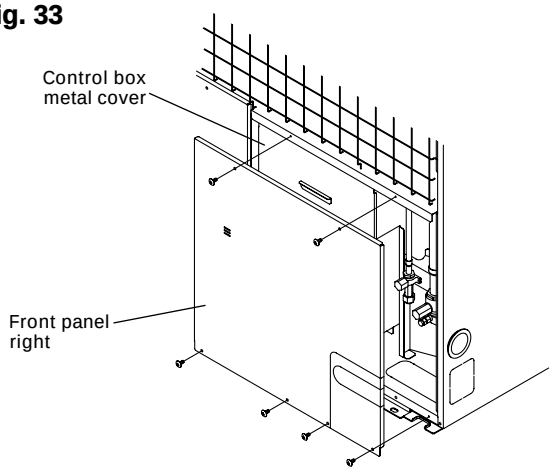

(2) Remove control box metal cover and connect the power supply cord and the outdoor unit connection cord wire at the indoor unit.

Fig. 34

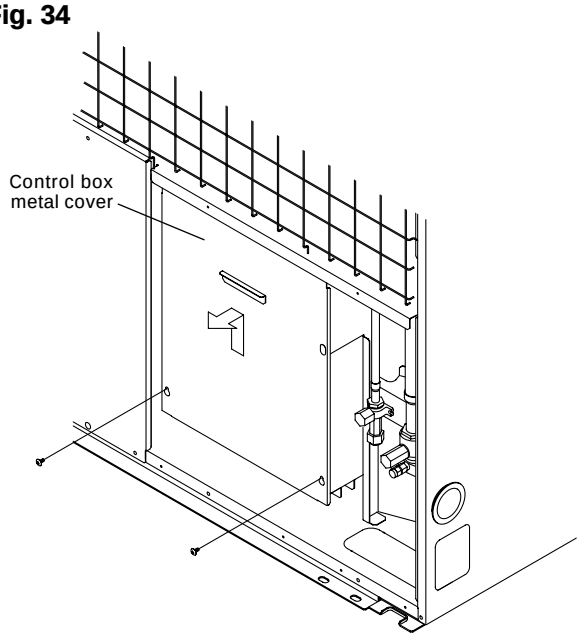

Fig. 35

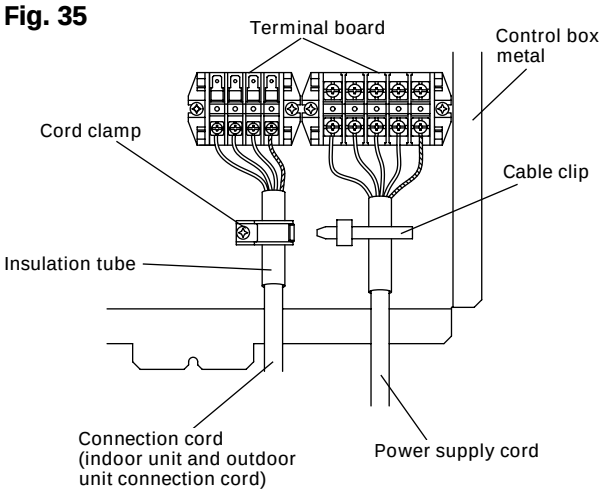

Fig. 36

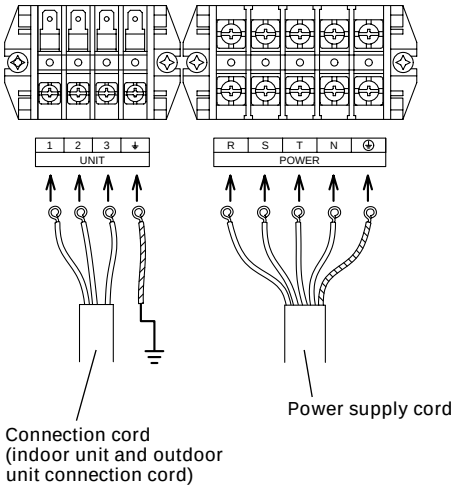

A. Two Connections

Fig. 37

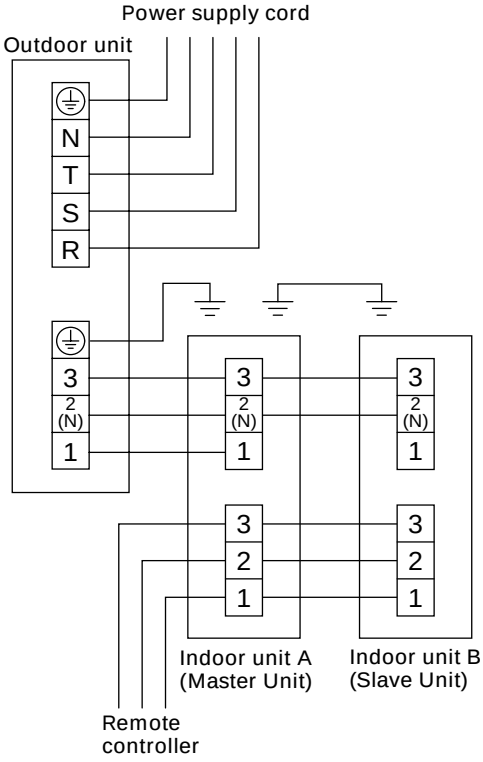

B. Three Connections

Fig. 38

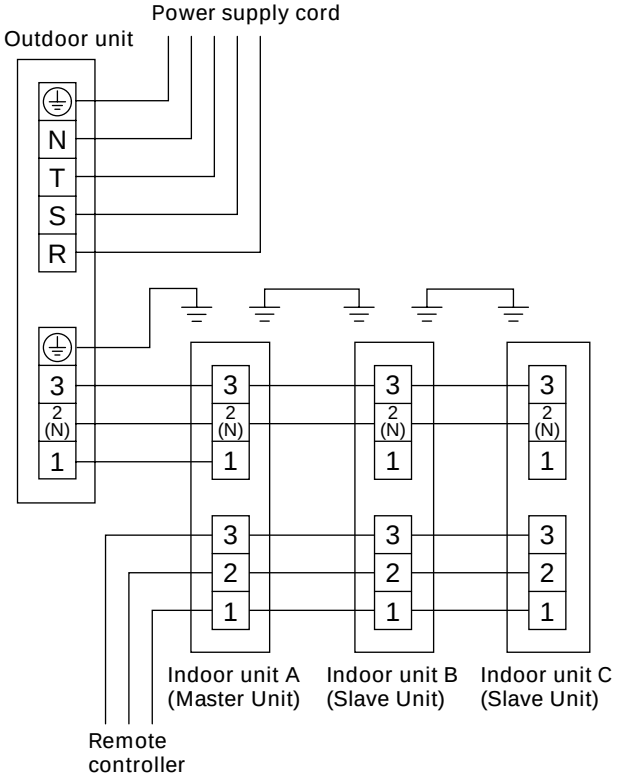

C. Four Connections

Fig. 39

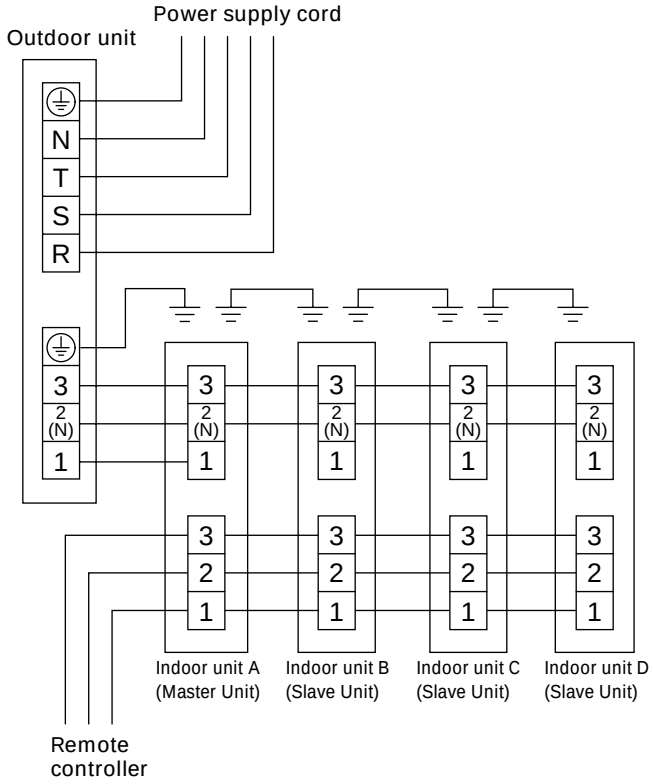

⚠ CAUTION

For connections between indoor and outdoor units, make connections with the indoor master unit. (Do not make connections with the slave units)

(3) Install the control box metal cover and front panel right.

Fig. 40

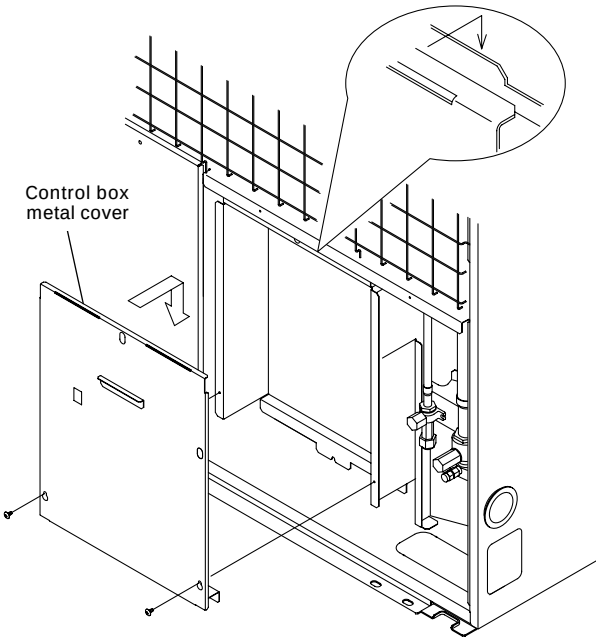

5. AN ERROR DISPLAY

Operation can be checked by lighting and flashing of the LED lamps.
Perform judgment in accordance with the following.

Table 11

LED	DESCRIPTION OF FAILURE	LED DISPLAY
LED 1	Compressor A operation	Lighted continuously
	Pressure switch A faulty (when turning on)	0.1 sec./0.1 sec. flashing
LED 2	4-way valve A operation	Lighted continuously
	Serial signal A faulty	0.5 sec./0.5 sec. flashing once
	Pressure A faulty	0.5 sec./0.5 sec. flashing 2 times
	Discharge temperature A abnormal	0.5 sec./0.5 sec. flashing 3 times
LED 3	Solenoid controlled valve A operation	Lighted continuously
	Discharge temperature thermistor A faulty	0.5 sec./0.5 sec. flashing 2 times
	Discharge temperature thermistor B faulty	0.5 sec./0.5 sec. flashing 3 times
	Heat exchanger thermistor A faulty	0.5 sec./0.5 sec. flashing 4 times
	Heat exchanger thermistor B faulty	0.5 sec./0.5 sec. flashing 5 times
	Outside temperature thermistor faulty	0.5 sec./0.5 sec. flashing 6 times
LED 4	Compressor B operation	Lighted continuously
	Pressure switch B faulty (When turning on)	0.1 sec./0.1 sec. flashing
LED 5	4-way valve B operation	Lighted continuously
	Serial signal B faulty	0.5 sec./0.5 sec. flashing once
	Pressure B faulty	0.5 sec./0.5 sec. flashing 2 times
	Discharge temperature B faulty	0.5 sec./0.5 sec. flashing 3 times
LED 6	Solenoid controlled valve B operation	Lighted continuously
	Negative-phase prevention faulty	0.5 sec./0.5 sec. flashing once
	EEPROM access faulty	0.5 sec./0.5 sec. flashing 7 times
	EEPROM ERASE faulty	0.1 sec./0.1 sec. flashing
ALL LEDs	Incorrect model No. error	0.1 sec./0.1 sec. flashing